HarmonicDrive®

FINE MECHANICS & TOTAL motion CONTROL

HarmonicDrive®

Reducer for precision control

General catalog

ISO14001
ISO9001

One invention has changed the motion control world.

HarmonicDrive (registered trademark) as “wave motion gearing” with its novel idea and unique principle was invented by C.W. Musser, a genius inventor in the U.S. Musser’s invention that demolishes conventional common sense and applies metal deflection was spotlighted by the world at the time as an epoch-making power transmission method. The company that provided the possibility to commercialize the product and submitted its name was USM (United Shoe Machinery) in the U.S. and our predecessor, Hasegawa Gear Co., Ltd.

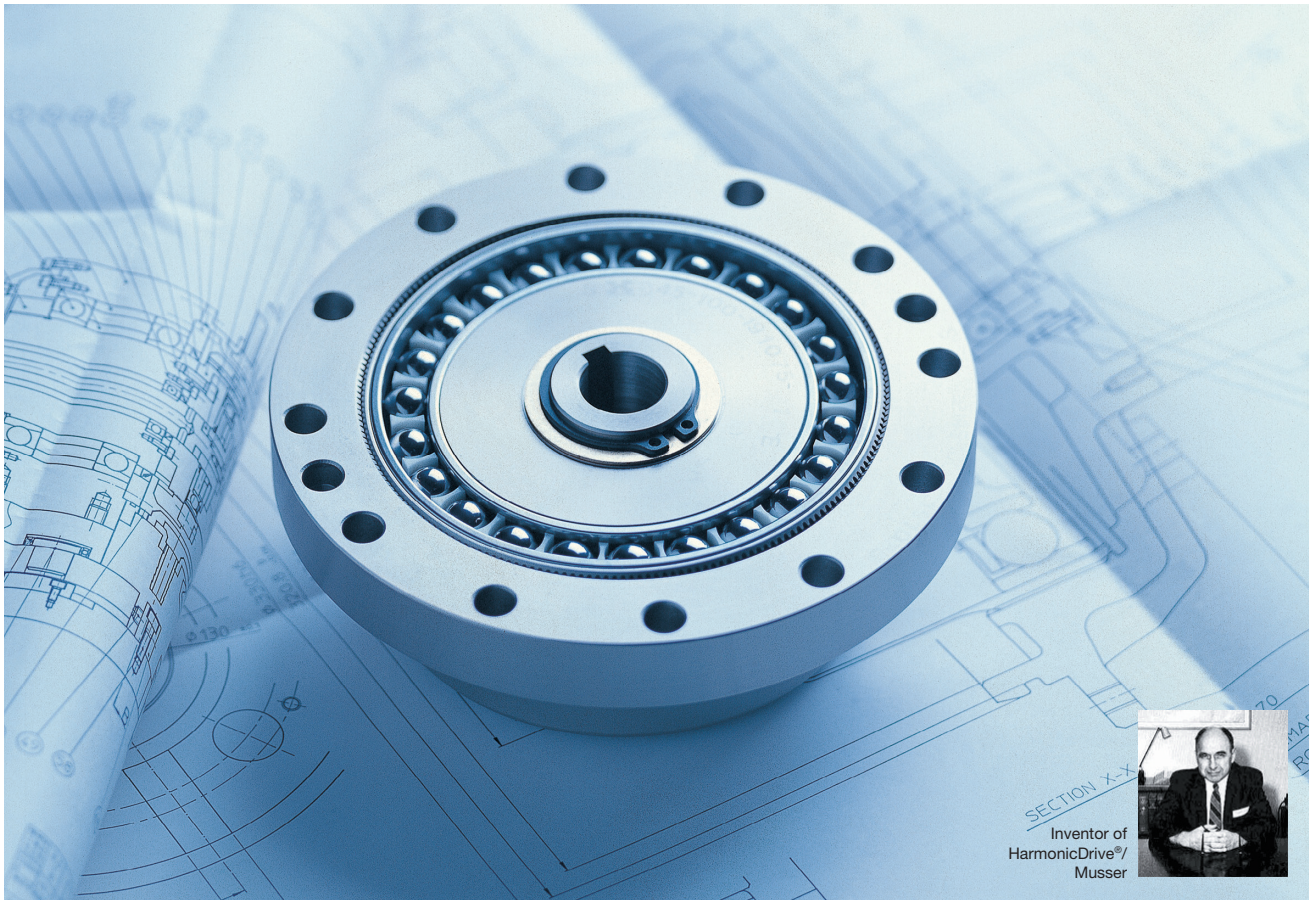

Inventor of HarmonicDrive®/ Musser

The strain wave gearing invented by Musser was announced under the name of “Strain wave gearing” at that time. At the same time, it was patented under the name and later, the Harmonic Drive System was successful in practical application. Its general academic name is “Strain wave gearing” and HarmonicDrive® is the registered trademark used only for the product manufactured and sold by our company.

Practical application of HarmonicDrive® in 1964

Our predecessor, Hasegawa Gear HD division, formed a technical partnership with USM Co., Ltd. in 1964 and was successful in putting HarmonicDrive® into practical use for the first time in Japan. Our company was established through joint capital investment in 1970. In 1979, it was renamed as the current Harmonic Drive Systems Co., Ltd.

It assures high torque and accurate repeatability while being compact and light.

The greatest characteristic of HarmonicDrive (registered trademark) as “wave motion gearing” is the ease of downsizing and weight saving as it consists of only three basic parts. As it has many teeth, it generates greater torque and allows very accurate repeatability. We have pushed ahead with the downsizing of HarmonicDrive® based on the development theme of reduction in size and weight, preserving the primary characteristic of the product. Currently, we are preparing a wide range of products including 31 kinds from 0.5 N·m to 9180 N·m (#3 to #100) torque capacity for various customer uses. We have reduced the bending stress of the bottom and the dedendum stress by the tooth plane load by developing an IH tooth profile invented from our own tooth profile theory, and we have improved the intensity and performance of the product by inputting all of our accumulated high-precision processing technology. HarmonicDrive® will continue to be developed in the future.

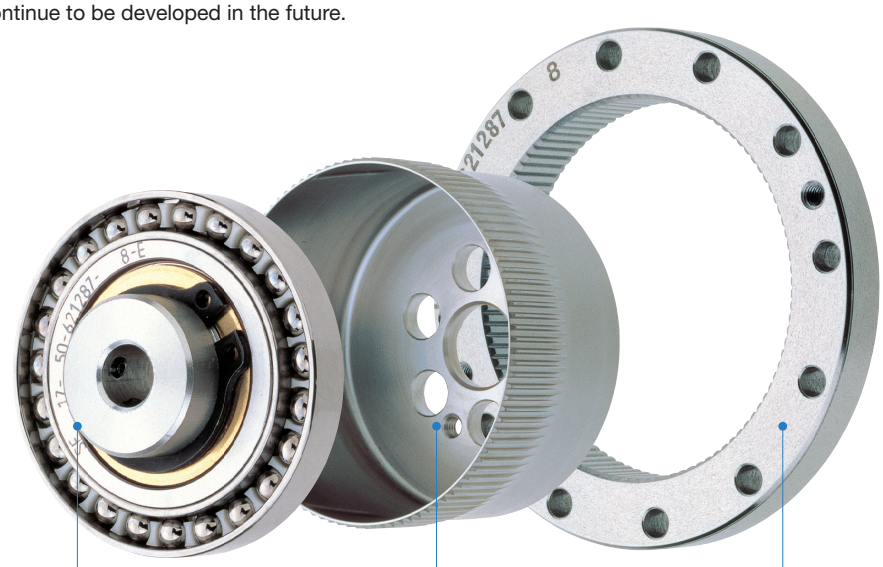

Wave Generator
The Wave Generator is a thin raced ball bearing fitted onto an elliptical hub serving as a high efficiency torque converter and generally mounted onto the input shaft.

Flexspline
The Flexspline is a non-rigid, thin cylindrical cup with external teeth. The bottom of Flexpline (bottom of cylindrical cup) is called diaphram and generally mounted onto the output shaft.

Circular Spline
The Circular Spline is a rigid ring with internal teeth, engaging the teeth of the Flexspline across the major axis of the Wave Generator. The Circular Spline has two more teeth than the Flexspline and is generally mounted onto housing.

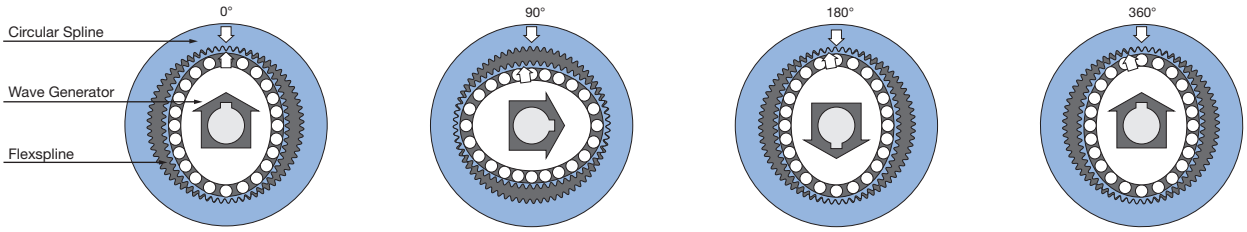

The Flexspline is deformed by the Wave Generator. Thus, the teeth of the Flexspline engage with the Circular Spline at the long shaft part and disengage completely at the short shaft part.

As the Wave Generator rotates clockwise while the Circular Spline is fixed in place, the Flexspline elastically deforms and engaging points of the teeth shift sequentially.

For each 180 clockwise movement of the Wave Generator, the Flexspline moves counterclockwise by one teeth.

When the wave generator rotates through one turn (360°), the Flexspline moves counterclockwise by two teeth based on the difference in the number of teeth because the Flexspline has two teeth fewer than the Circular Spline. Normally, this motion is taken out as output.

■ Development of HarmonicDrive®

CSS series (1988)

Pursuit of more intensity and rigidity
■ New tooth profile theory – Invention of the IH tooth profile has improved intensity, rigidity and life two-fold compared to conventional models.

CSF series (1991)

Pursuit of space and total cost saving
■ The axial length has been reduced to about one half.
■ Units that allow easy mounting are also available.

CSG series (1999)

Pursuit of high load capacity and high reliability
■ The torque capacity has been increased to 30%.
■ The life has been improved (7,000 hours to 10,000 hours).

Reduction ratio of 30 series (1999)

Pursuit of higher speed
■ A reduction ratio of 30 has been added.

Pursuit of downsizing/ weight reduction (2000 to 2013)

Models 8 and 11 of the CSF series in 2000, Model 5 in 2002, and the smallest Model 3 in 2006 were added in pursuit of further downsizing.
■ Intensity and rigidity have been improved two-fold compared to conventional models.

The CSD series was added in 2001 in pursuit of further flatness.
■ 1/3 of the thickness for the CS series and 1/2 of the thickness for the CSD series have been achieved.

As a result of pursuing further weight reduction, a light-weight type has been added to the product lineup of the unit type
■ Weight of the product of CSG/CSF series has been

HarmonicDrive® has been evolving since it was born. The CS series in 1981 and the current prime CSF series have achieved 3/5 of the thickness and double the power transmission. The next-generation CSD series have achieved 1/3 thickness of the CS series and have been successful in achieving high torque and rotational accuracy.

Product Lineup

Series

Reducer for precision control HarmonicDrive®

Component Type

Only three basic components are used. Mounted directly in equipment or systems for an enhanced degree of design freedom.

Cup type	CSG	High-torque Type
	CSF	Standard Type
	CSD	Super Flat Type
Silk Hat type	SHG	High-torque Type
	SHF	Standard Type
Pancake type	FB	Standard Type
	FR	Standard Type

Unit Type

Casing the component type, a precision crossed roller bearing is contained on the output side for ease of assembly and for a reduction in total cost.

CSG-2UH	High-torque Type
CSG-2UH-LW	High-torque Light Weight Type
CSF-2UH	Standard Type
CSF-2UH-LW	Standard Light Weight Type
CSG-2UK	Seal Structure Full Unit Type
CSD-2UH	Super Flat Type
CSD-2UF	Super Flat Hollow Shaft Type
SHG-2UH	High-torque Hollow Shaft Type
SHG-2UH-LW	High-torque Light Weight Hollow Shaft Type
SHF-2UH	Hollow Shaft Type
SHF-2UH-LW	Light Weight Hollow Shaft Type
SHG-2UJ	High-torque Shaft Input Type
SHF-2UJ	Shaft Input Type
SHD-2UH-LW	Super Flat Light Weight Hollow Shaft Type
CSFsupermini	Super Compact Type
CSF-mini	Compact Type
CSF-2UP	Ultra-Flat/High Stiffness Type
FBS-2UH	Large-hollow-shaft Speed Reducer Unit Type

Simple Unit Type

A unit type without input and output flanges for a reduction in total cost.

SHG-2SH	High-torque Flat Hollow Shaft Type
SHF-2SH	Flat Hollow Shaft Type
SHG-2SO	High-torque Flat Type
SHF-2SO	Flat Type
SHD-2SH	Super Flat Hollow Shaft Type

Differential Gear (Phase adjustment type)

This applies the principle of HarmonicDrive® to allow minute phase adjustment using few parts.

FD-2	Component Type
FD-0	Unit Type

Gear head type

This is a gear head for the servo motor. Even if you are not familiar with handling HarmonicDrive®, you can handle it easily.

CSG-GH	High-torque Gear Head Type
CSF-GH	Gear Head Type

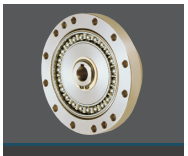
CSG / CSF


CSD

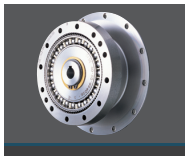
SHG / SHF


FB / FR


CSG-2UH / CSF-2UH
CSG-2UH-LW / CSF-2UH-LW


CSG-2UK


CSD-2UH / CSD-2UF

Product features

Example ◎:Superlative ○:Excellent △:Good

Variation		Torque-weight Ratio	Torsional Stiffness	Positioning Accuracy	Light weight	Flat Shape	Hollow Structure	Customizing	Life	Page in Catalog
Peak Torque (N·m)	Reduction Ratio									
23~3400	50~160	◎	◎	◎	○	○	△	◎	◎	035
1.8~9200	30~160	○	◎	◎	○	○	△	◎	○	035
12~820	50~160	○	○	○	◎	◎	○	◎	○	061
23~3400	50~160	◎	◎	◎	○	○	◎	◎	◎	079
9.0~1840	30~160	○	◎	◎	○	○	◎	◎	○	079
7.8~330	50~160	△	△	△	◎	◎	◎	◎	△	103
9.8~4000	50~320	△	△	△	△	△	◎	◎	△	111

Variation		Torque-weight Ratio	Torsional Stiffness	Positioning Accuracy	Light weight	Flat Shape	Hollow Structure	Customizing	Life	Page in Catalog
Peak Torque (N·m)	Reduction Ratio									
23~3400	50~160	◎	○	◎	○	○	△	○	◎	123
23 ~ 3400	50 ~ 160	◎	○	◎	◎	○	△	○	◎	123
9.0~2600	30~160	○	○	◎	○	○	△	○	○	123
9.0~2600	30 ~ 160	◎	○	◎	◎	○	△	○	○	123
127~3419	50 ~ 160	○	○	◎	△	○	–	○	○	145
12~823	50~160	◎	◎	◎	○	◎	○	○	○	157
12~453	50~160	◎	◎	◎	○	◎	◎	○	○	157
23~3400	50~160	◎	◎	◎	△	△	◎	○	◎	177
23 ~ 3400	50 ~ 160	◎	◎	◎	○	△	◎	○	◎	177
9.0~1800	30~160	○	◎	◎	△	△	◎	○	○	177
9.0~1800	30 ~ 160	◎	◎	◎	○	△	◎	○	○	177
23~3400	50~160	◎	◎	◎	△	△	–	○	◎	177
9.0~1800	30~160	○	◎	◎	△	△	–	○	○	177
12 ~ 450	50 ~ 160	◎	○	◎	◎	◎	◎	○	○	213
0.13~0.30	30~100	○	△	◎	◎	○	–	○	○	235
0.5~28	30~100	○	△	◎	◎	○	–	○	○	249
1.8~28	50~100	○	◎	◎	○	◎	–	○	◎	275
25 ~ 106	30 ~ 100	○	◎	◎	○	○	◎	○	◎	289
23~3400	50~160	◎	◎	◎	○	○	◎	◎	◎	177
9.0~1800	30~160	○	◎	◎	○	○	◎	◎	○	177
23~3400	50~160	◎	◎	◎	○	○	–	◎	◎	177
9.0~1800	30~160	○	◎	◎	○	◎	–	◎	○	177
12~450	50~160	◎	○	◎	◎	◎	◎	◎	○	213

Variation		Torque-weight Ratio	Torsional Stiffness	Positioning Accuracy	Light weight	Flat Shape	Hollow Structure	Customizing	Life	Page in Catalog
Peak Torque (N·m)	Reduction Ratio									
23~3400	50~160	△	△	△	○	◎	◎	○	△	301
9.0~1800	30~160	△	△	△	△	○	–	△	△	301

Variation		Torque-weight Ratio	Torsional Stiffness	Positioning Accuracy	Light weight	Flat Shape	Hollow Structure	Customizing	Life	Page in Catalog
Peak Torque (N·m)	Reduction Ratio									
23 ~ 3400	50 ~ 160	◎	◎	◎	△	△	–	△	◎	317
18~2600	50~160	○	◎	◎	△	△	–	△	○	317

* The relative merits and demerits of products are compared among our products.

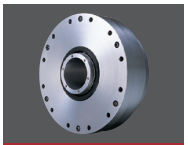
SHG-2UH ／ SHF-2UH
SHG-2UH-LW ／ SHF-2UH-LW


FBS-2UH


CSFsupermini ／ CSF-mini

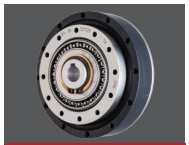
SHG-2SO ／ SHF-2SO
SHG-2SH ／ SHF-2SH


SHD-2SH

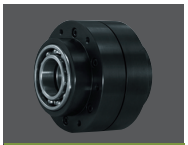
FD

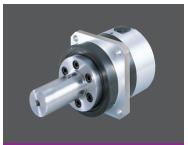
CSG-GH ／ CSF-GH

Reducer for precision control

HarmonicDrive®

General catalog

Engineering Data

Engineering Data

On the tooth profile

■Mechanism of IH tooth profile

The IH tooth profile has been devised for HarmonicDrive® with a unique mechanism by pursuing the optimum tooth profile. It has a special curved surface unique to the IH tooth profile that allows continuous contact with the tooth profile. It also alleviates the concentration of stress by widening the width of the tooth groove against the tooth thickness and enlarging the circle on the bottom. The figure shows how the teeth of flexspline that repeat elastic deformation move against the teeth of the fixed circular spline.

The teeth maintain contact for some time from the beginning of engagement. The number of simultaneously engaged teeth reaches 30% of the whole number of teeth by continuous contact with these teeth. HarmonicDrive® that has implemented the IH tooth profile maintains the smoothness of the conventional mechanism using the involute tooth profile, and has achieved dramatic technological innovation in precision, intensity, rigidity and life.

*Patented

Engaged route of teeth — Fig. 009-1

Conventional tooth profile

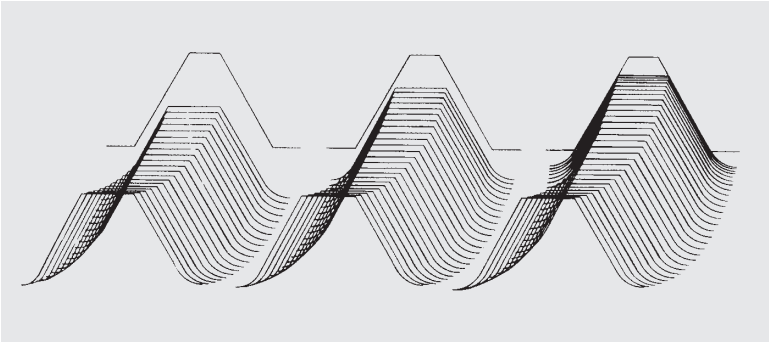

IH tooth profile

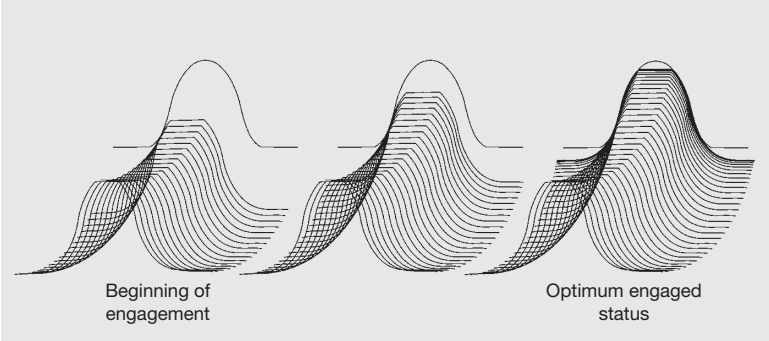

Engaged area of teeth — Fig. 009-2

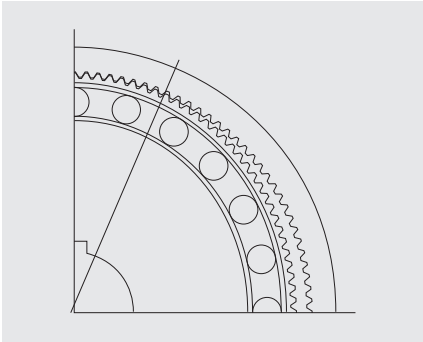

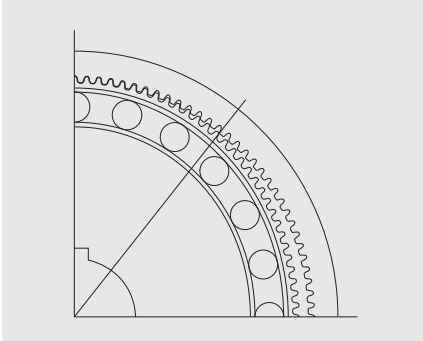

Rotational direction and reduction ratio

Cup-type

The rotational direction and reduction ratio of the cup-type HarmonicDrive® are shown below.
The cup-type HarmonicDrive® is composed of the following series.
CSG, CSF, CSD, CSF-mini, CSF-GH

■Rotational direction

Fig. 010-1

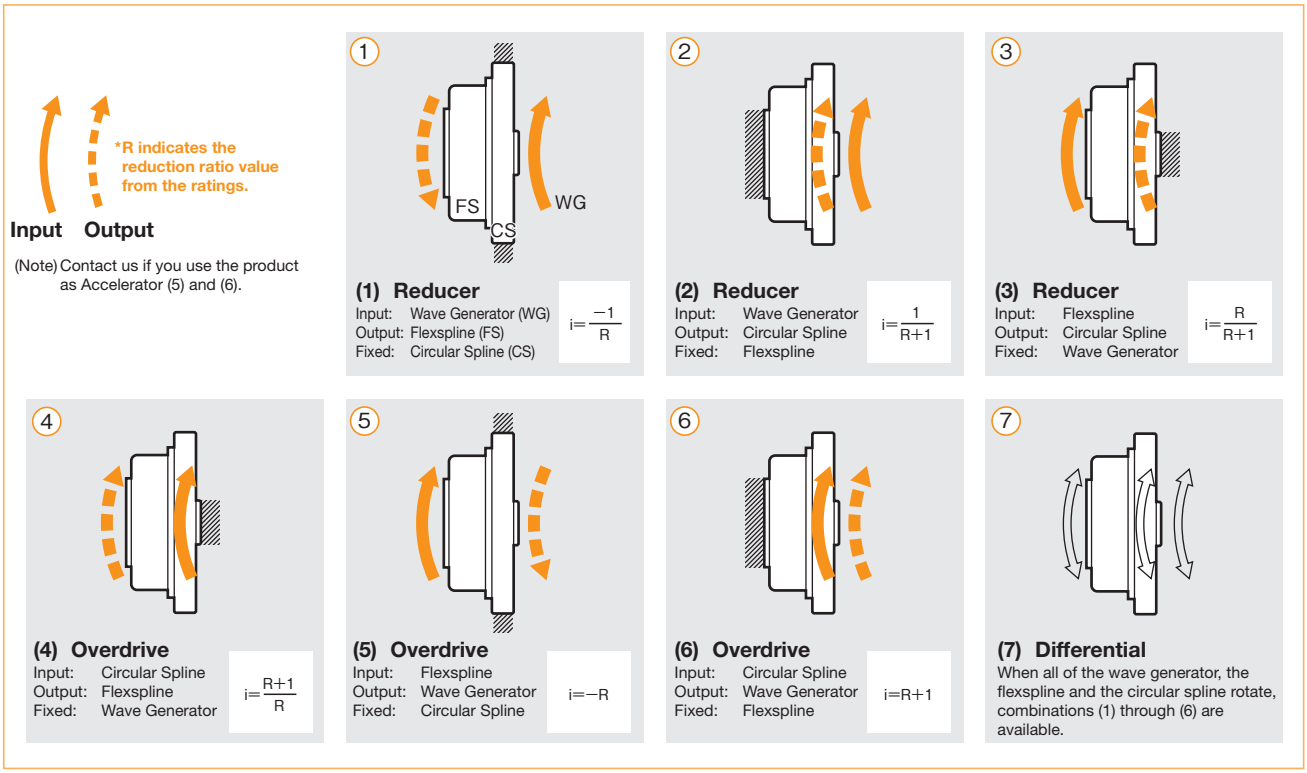

* Using as an overdrive will cause torque pulsation. Contact us for details.

■Reduction ratio

The reduction ratio of HarmonicDrive® is determined by the number of teeth of the Flexspline and the Circular Spline

Number of teeth of the Flexspline: Zf
Number of teeth of the Circular Spline: Zc

▶ Input: Wave Generator, Output: Flexspline, Fixed: Circular Spline } Reduction ratio $i_1 = \frac{1}{R_1} = \frac{Zf-Zc}{Zf}$

▶ Input: Wave Generator, Output: Circular Spline, Fixed: Flexspline } Reduction ratio $i_2 = \frac{1}{R_2} = \frac{Zc-Zf}{Zc}$

■ R_1 indicates the reduction ratio value from the ratings.

Example

Number of teeth of the Flexspline: 200
Number of teeth of the Circular Spline: 202

▶ Input: Wave Generator, Output: Flexspline, Fixed: Circular Spline } Reduction ratio $i_1 = \frac{1}{R_1} = \frac{200-202}{200} = \frac{-1}{100}$

▶ Input: Wave Generator, Output: Circular Spline, Fixed: Flexspline } Reduction ratio $i_2 = \frac{1}{R_2} = \frac{202-200}{202} = \frac{1}{101}$

Silk hat type

The rotational direction and reduction ratio of the silk hat type HarmonicDrive® are shown below.
The silk hat type HarmonicDrive® is composed of the following series.
SHG, SHF, SHD

■Rotational direction

Fig. 011-1

(Note) Contact us if you use the product as an overdrive of (5) or (6).

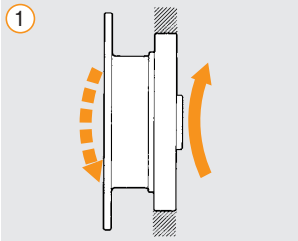

(1) Reducer
Input: Wave Generator
Output: Flexspline
Fixed: Circular Spline
$i=\frac{-1}{R}$

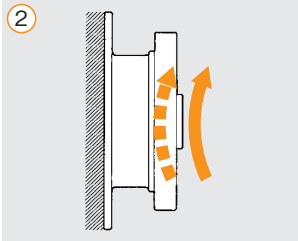

(2) Reducer
Input: Wave Generator
Output: Circular Spline
Fixed: Flexspline
$i=\frac{1}{R+1}$

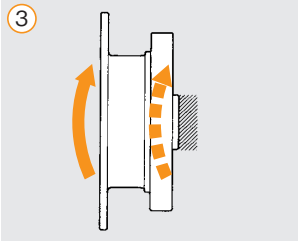

(3) Reducer
Input: Flexspline
Output: Circular Spline
Fixed: Wave Generator
$i=\frac{R}{R+1}$

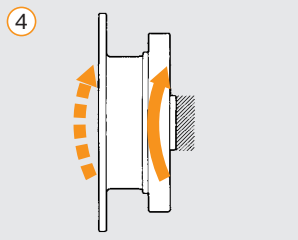

(4) Overdrive
Input: Circular Spline
Output: Flexspline
Fixed: Wave Generator
$i=\frac{R+1}{R}$

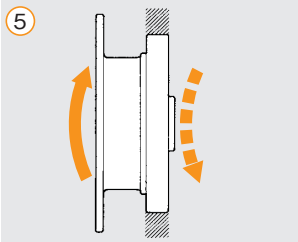

(5) Overdrive
Input: Flexspline
Output: Wave Generator
Fixed: Circular Spline
$i=-R$

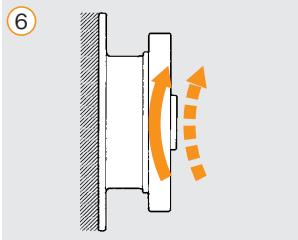

(6) Overdrive
Input: Circular Spline
Output: Wave Generator
Fixed: Flexspline
$i=R+1$

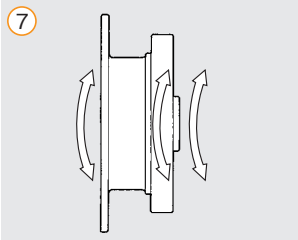

(7) Differential
When all of the wave generator, the flexspline and the circular spline rotate, Combinations (1) through (6) are available.

* Using as an overdrive will cause torque pulsation. Contact us for details.

■Reduction ratio

The reduction ratio of HarmonicDrive® is determined by the number of teeth of the Flexspline and the Circular Spline

Number of teeth of the Flexspline: Zf
Number of teeth of the Circular Spline: Zc

▶ Input: Wave Generator, Output: Flexspline, Fixed: Circular Spline — Reduction ratio $i_1 = \frac{1}{R_1} = \frac{Zf-Zc}{Zf}$

▶ Input: Wave Generator, Output: Circular Spline, Fixed: Flexspline — Reduction ratio $i_2 = \frac{1}{R_2} = \frac{Zc-Zf}{Zc}$

■ R_1 indicates the reduction ratio value from the ratings.

Example
Number of teeth of the Flexspline: 200
Number of teeth of the Circular Spline: 202

▶ Input: Wave Generator, Output: Flexspline, Fixed: Circular Spline — Reduction ratio $i_1 = \frac{1}{R_1} = \frac{200-202}{200} = \frac{-1}{100}$

▶ Input: Wave Generator, Output: Circular Spline, Fixed: Flexspline — Reduction ratio $i_2 = \frac{1}{R_2} = \frac{202-200}{202} = \frac{1}{101}$

Pancake type

See the corresponding pages of each series for the rotational direction and reduction ratio of the pancake type HarmonicDrive®.
The pancake type HarmonicDrive® is composed of the following series.
FB and FR

Terms on the rated table

The ratings of HarmonicDrive® consist of 6 values and inertia moment.
See the corresponding pages of each series for values from the ratings.

■Rated torque

This indicates the permissible continuous load torque when the input rotational speed is 2000 r/min.

■Permissible peak torque for start and stop (see Graph 012-1)

Load larger than the steady torque is applied to HarmonicDrive® by the load inertia moment for start and stop. Values from the ratings show the acceptable value at peak torque.

■Permissible maximum value at average load torque

When the load torque and input rotational speed change, the average value of the load torque needs to be obtained. Values from the ratings show the acceptable value at average load torque. When the average load torque (calculation formula: Page 014) exceeds the value from the ratings, generation of heat degrades the lubricant earlier and accelerates the abrasion of the teeth. Due care should be taken.

■Permissible maximum momentary torque (see Graph 012-1)

Unexpected impact torque may be applied from the exterior except regular-load torque and load torque for start and stop.
The maximum value of the impact torque must not exceed the maximum momentary torque in the rating table.
The frequency of applying the impact torque is limited. See “On intensity” and “On life” section.
Also, if there is a possibility that this torque is applied, see the “Tightening the Flexspline bolt.” page in the manual for each series.

■Permissible maximum input rotational speed, permissible average input rotational speed

Use the input rotational speed within the limit of acceptable values shown from the ratings (calculation formula of the average input rotational speed: Page 014).

■Inertia moment

The inertia moment on the axles of the wave generators of each model is indicated.

Example of load torque pattern — Graph 012-1

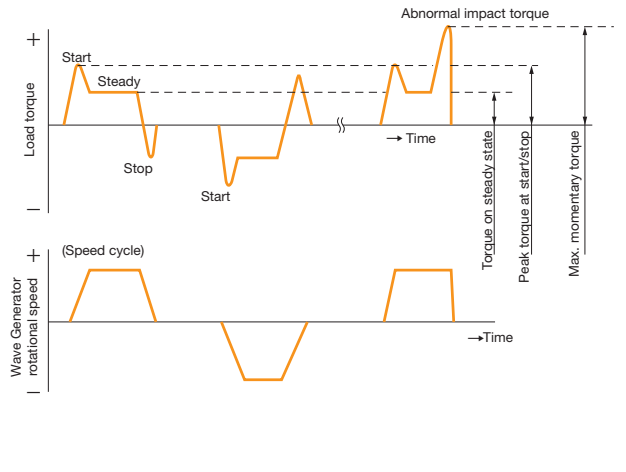

On life

■Life of the wave generator

The life of HarmonicDrive® is determined by the life of the wave generator bearing, and you can calculate this by the rotational speed and the load torque just as with a general ball bearing.

Table 012-1

	Life	
Series name	CSF,CSD,SHF,SHD, CSF-mini,CSF-GH	CSG,SHG
L_{10} (10% damage probability)	7,000 hours	10,000 hours
L_{50} (average life)	35,000 hours	50,000 hours

* Life is based on the rated rotational speed and rated torque from the ratings.

Calculation formula for life (Lh) by actual operation condition — Formula 012-1

$$Lh = Ln \cdot \left(\frac{Tr}{Tav}\right)^3 \left(\frac{Nr}{Nav}\right)$$

Table 012-2

Ln	Life of L_{10} or L_{50}
Tr	Rated torque
Nr	Rated rotational speed
T_{av}	Average load torque on the output side (calculation formula: Page 014)
N_{av}	Average input rotational speed (calculation formula: Page 014)

Relational diagram of intensity and life of HarmonicDrive® — Graph 012-2

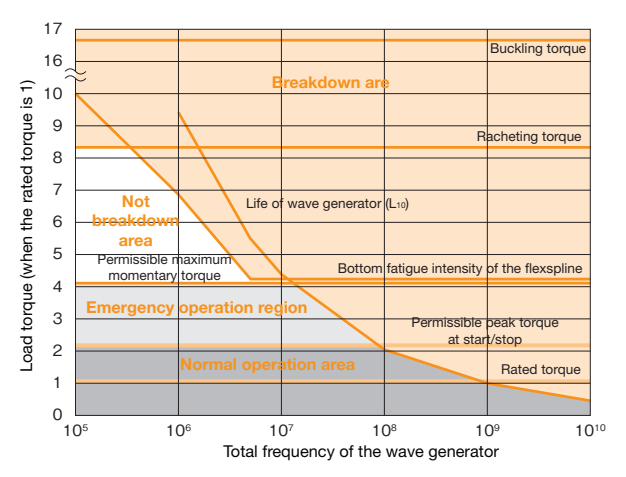

(Note)
Use HarmonicDrive® within the range of “Normal operation area.” Using it beyond “Emergency operation area” may result in damaging HarmonicDrive® earlier than usual.
* Lubricant life such as for abrasion on the tooth surface is not taken into consideration in the graph described above.
* Use the graph above as reference values.

On intensity

■Intensity of flexspline

As flexspline repeats elastic deformation, the transmission torque of HarmonicDrive® is calculated based on the fatigue strength of the bottom of the flexspline. Values of the rated torque and permissible peak torque for start and stop are those within the fatigue limit of the bottom of the flexspline.
If impact torque that exceeds the peak torque for start and stop is applied, it could generate fatigue fracture. Therefore, the number of applications of impact torque is limited to prevent possible fatigue fracture. However, the maximum value of the impact torque can not exceed the permissible maximum momentary torque.

Restriction on the bending frequency of the flexspline by the rotation of the wave generator while the impact torque is applied: 1.0 x 10^4 (frequency)

You can calculate the permissible frequency of impact torques from this restriction on the bending frequency.

Calculation formula

Formula 013-1

$$N=\frac{1.0\times10^4}{2\times\frac{n}{60}\times t}$$

Table 013-1

Permissible frequency	N frequency
Time that impact torque is applied	t sec
Rotational speed of the wave generator	n r/min
The flexspline bends two times by one cycle of the wave generator.	

Caution	If impact torque exceeds the permissible frequency, it may cause fatigue fracture to the flexspline.

■Buckling torque

When excess torque is applied to the flexspline (output) with the wave generator fixed, the flexspline causes elastic deformation, buckles on the body before long and will be destroyed. The torque at the time is called buckling torque.

* See the corresponding pages of each series for buckling torque values.

Warning	When the flexspline buckles, HarmonicDrive® will be put out of commission. Therefore, adequate care should be exercised.

■Ratcheting torque

When excess impact torque is applied during operation, the engagement of the teeth between the circular spline and the flexspline may be put momentarily out of alignment instead of damaging the flexspline. This phenomenon is called “ratcheting,” and the torque is called “ratcheting torque” (see values on the corresponding page of each series). Operating the drive without fixing ratcheting will result in earlier abrasion of the teeth and shorter life of the wave generator bearing due to the effect of the grinding powder generated by ratcheting.

* See the corresponding pages of each series for ratcheting torque values.
* Ratcheting torque is affected by the rigidity of the housing to be used when installing the circular spline. Contact us for details of the ratcheting torque.

Caution	When ratcheting is caused, the teeth may not be correctly engaged and become out of alignment as shown in Figure 013-1. As operating the drive in this condition will generate vibration and damage the flexspline, adequate care should be exercised.

Caution	Once ratcheting is caused, the tips of the teeth are worn and the torque value generated by ratcheting will be lowered. Pay due attention to this point as well.

When the engagement of the teeth is out of alignment

Fig. 013-1

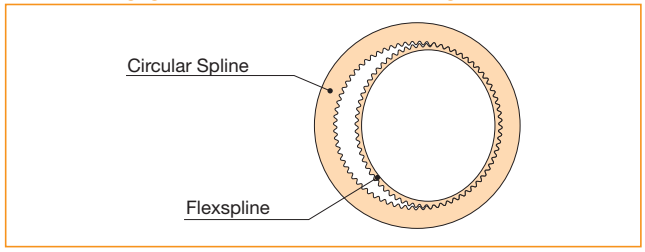

This condition is called “dedoi-dal”.

Model number selection

In general, the servo system is rarely in a continuous constant load state. The input rotational speed, load torque change and comparatively large torque are applied at start and stop. Unexpected impact torque may be applied.
These fluctuating load torques should be converted to the average load torque in selecting a model number.
As an accurate cross roller bearing is built in the direct external load support (output flange) of the unit type, the maximum moment load, life of the cross roller bearing and the static safety coefficient should also be checked (see “Checking the main roller bearing” on Page 030).

■Checking the load torque pattern

First, you need to look at the picture of the load torque pattern. Check the specifications shown in the figure below.

Graph 014-1

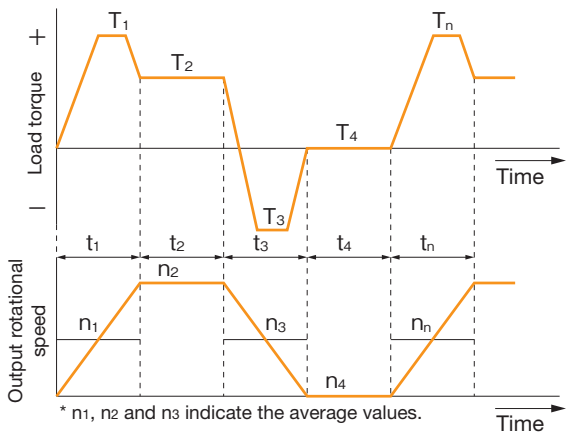

Obtain the value of each load torque pattern.

Load torque	T_n (N·m)
Time	t_n (sec)
Output rotational speed	n_n (r/min)

<Normal operation pattern>

Starting time	T_1, t_1, n_1
Steady operation time	T_2, t_2, n_2
Stopping (slowing) time	T_3, t_3, n_3
Break time	T_4, t_4, n_4

<Maximum rotational speed>

Max. output rotational speed	no max
Max. input rotational speed (Restricted by motors)	ni max

<Impact torque>

When impact torque is applied	T_s, t_s, n_s

<Required life>

L_{10} = L (hours)

■Flowchart of model number selection

Select a model number according to the following flowchart.
If you find a value exceeding that from the ratings, you should review it with the upper-level model number or consider reduction of conditions including the load torque.

Calculate the average load torque applied on the output side of HarmonicDrive® from the load torque pattern: T_{av} (N·m).

$$T_{av} = \sqrt[3]{\frac{n_1 \cdot t_1 \cdot |T_1|^3 + n_2 \cdot t_2 \cdot |T_2|^3 + \cdots n_n \cdot t_n \cdot |T_n|^3}{n_1 \cdot t_1 + n_2 \cdot t_2 + \cdots n_n \cdot t_n}}$$

Select a model number temporarily with the following conditions.
T_{av} ≦ Permissible maximum value of the average load torque
(See the ratings of each series).

Calculate the average output rotational speed: no av (r/min)

$$\text{no av} = \frac{n_1 \cdot t_1 + n_2 \cdot t_2 + \cdots n_n \cdot t_n}{t_1 + t_2 + \cdots t_n}$$

Obtain the reduction ratio (R).
A limit is placed on “ni max” by motors.

$$\frac{\text{ni } max}{\text{no } max} \geqq R$$

Calculate the average input rotational speed from the average output rotational speed (no av) and the reduction ratio (R): ni av (r/min)

$$\text{ni } av = \text{no } av \cdot R$$

Calculate the maximum input rotational speed from the max. output rotational speed (no max) and the reduction ratio (R): ni max (r/min)

$$\text{ni } max = \text{no } max \cdot R$$

Review of the operation conditions and model number

NG — Check whether the temporarily selected model number satisfies the following condition from the ratings.
Ni av ≦ Permissible average input rotational speed (r/min)
Ni max ≦ Permissible max. input rotational speed (r/min)

OK

NG — Check whether T_1 and T_3 are equal to or less than the permissible peak torque (N·m) value at start and stop from the ratings.

OK

NG — Check whether T_s is equal to or less than the permissible maximum momentary torque (N·m) value from the ratings.

OK

NG — Calculate (Ns) the permissible number of times from output rotational speed n_s and time t_s when the impact torque is applied, and check whether it satisfies the usage conditions.

$$N_S = \frac{10^4}{2 \cdot \frac{n_S \cdot R}{60} \cdot t} \text{ (times)} \cdot N_S \leqq 1.0 \times 10^4 \text{ (times)}$$

OK

Calculate the lifetime.

$$L_{10} = 7000 \cdot \left(\frac{Tr}{T_{av}}\right)^3 \cdot \left(\frac{nr}{ni_{av}}\right) \text{ (hours)}$$

NG — Check whether the calculated lifetime is equal to or more than the life of the wave generator (see Page 013).

OK

The model number is determined.

■Example of model number selection

Value of each load torque pattern.

Load torque	T_n(N·m)
Time	t_n(sec)
Output rotational speed	n_n(r/min)

<Normal operation pattern>

Starting time	T_1 = 400 N·m,	t_1 = 0.3sec,	n_1 = 7r/min
Steady operation time	T_2 = 320 N·m,	t_2 = 3sec,	n_2 = 14r/min
Stopping (slowing) time	T_3 = 200 N·m,	t_3 = 0.4sec,	n_3 = 7r/min
Break time	T_4 = 0 N·m,	t_4 = 0.2sec,	n_4 = 0r/min

<Maximum rotational speed>

Max. output rotational speed	no $_{max}$ = 14 r/min
Max. input rotational speed (Restricted by motors)	ni $_{max}$ = 1800 r/min

<Impact torque>

When impact torque is applied T_s = 500N·m, t_s = 0.15sec, n_s = 14r/min

<Required life>

L_{10} = 7000 (hours)

Calculate the average load torque applied on the output side of HarmonicDrive® from the load torque pattern: T_{av} (N·m).

$$T_{av} = \sqrt[3]{\frac{7r/min \cdot 0.3sec \cdot |400N\cdot m|^3 + 14r/min \cdot 3sec \cdot |320N\cdot m|^3 + 7r/min \cdot 0.4sec \cdot |200N\cdot m|^3}{7r/min \cdot 0.3sec + 14r/min \cdot 3sec + 7r/min \cdot 0.4sec}}$$

Select a model number temporarily with the following conditions. T_{av} = 319 N·m ≦ 451 N·m
(Permissible maximum value of the average load torque for model number CSF-40-120: See the ratings on Page 039.)
Thus, CSF-40-120-2A-GR is temporarily selected.

Calculate the average output rotational speed: no $_{av}$ (r/min)

$$no_{av} = \frac{7r/min \cdot 0.3sec + 14r/min \cdot 3sec + 7r/min \cdot 0.4sec}{0.3sec + 3sec + 0.4sec + 0.2sec} = 12r/min$$

Obtain the reduction ratio (R).

$$\frac{1800r/min}{14r/min} = 128.6 \geqq 120$$

Calculate the average input rotational speed from the average output rotational speed (no $_{av}$) and the reduction ratio (R): ni $_{av}$ (r/min)

$$ni_{av} = 12r/min \cdot 120 = 1440r/min$$

Calculate the maximum input rotational speed from the maximum output rotational speed (no $_{max}$) and the reduction ratio (R): ni $_{max}$ (r/min)

$$ni_{max} = 14r/min \cdot 120 = 1680r/min$$

Check whether the temporarily selected model number satisfies the following condition from the ratings.

Ni $_{av}$ = 1440 r/min ≦ 3600 r/min (Permissible average input rotational speed of model No. 40)
Ni $_{max}$ = 1680 r/min ≦ 5600 r/min (Permissible max. input rotational speed of model No. 40)

NG

OK

Check whether T_1 and T_3 are equal to or less than the permissible peak torque (N·m) value at start and stop from the ratings.

T_1 = 400 N·m ≦ 617 N·m (Permissible peak torque at start and stop of model number 40)
T_3 = 200 N·m ≦ 617 N·m (Permissible peak torque at start and stop of model number 40)

NG

OK

Check whether Ts is equal to or less than the permissible maximum momentary torque (N·m) value from the ratings.

T_s = 500 N·m ≦ 1180 N·m (Permissible maximum momentary torque of model number 40)

NG

OK

Calculate the permissible number of times from output rotational speed n_s and time t_s when the impact torque is applied, and check whether it satisfies the usage conditions.

$$N_S = \frac{10^4}{2 \cdot \frac{14r/min \cdot 120}{60} \cdot 0.15\ sec} = 1190 \leqq 1.0\times10^4 \text{ (times)}$$

NG

OK

Calculate the life.

$$L_{10} = 7000 \cdot \left(\frac{294N\cdot m^3}{319N\cdot m}\right) \cdot \left(\frac{2000r/min}{1440r/min}\right) \text{(hours)}$$

Check whether the calculated life is equal to or more than the life of the wave generator (see Page 012).
L_{10} =7610 hours ≧ 7000 (life of the wave generator: L_{10})

NG

OK

Model number CSF-40-120-2A-GR is determined from the result described above.

Review of the operation conditions and model number

On lubricant

Grease lubricant and oil lubricant are available for lubricating the component type. Grease lubricant is standard for lubricating the unit type and the gear head type. You do not need to apply grease during assembly as the product is lubricated and shipped.
See Page 019 for using lubricant beyond the temperature range described in the right-hand figure.

* Contact the sales division if you want consistency zero (NLGI No.0) for maintenance reasons.

Name of lubricant

Table 016-1

Grease	Harmonic grease® SK-1A
	Harmonic grease® SK-2
	Harmonic grease® 4B No.2
Oil	Industrial gear oil class-2 (extreme pressure) ISO VG68

Temperature range of the operating environment

Table 016-2

Grease	SK-1A 0°C to + 40°C
	SK-2 0°C to + 40°C
	4B No.2 −10°C to + 70°C
Oil	ISO VG68 0°C to + 40°C

* Keep the hot section up to 40°C above the ambient temperature.

Grease lubricant

■Types of lubricant

Harmonic grease® SK-1A

This has been developed as grease exclusively for HarmonicDrive® and is excellent in durability and efficiency compared to commercial general-purpose grease.

Harmonic grease® SK-2

This has been developed exclusively for the compact HarmonicDrive® and is excellent in smoothness during wave generator rotation by liquefying extreme-pressure additive.

Harmonic grease® 4B No.2

This has been developed exclusively for the CSF and CSG series, has the fluid characteristic suited to longer operating life and is used for a wide temperature range.

(Note) 1. A seal mechanism is required for grease lubrication. Take the following actions for the rotor and the surface-contacting joints. In particular, a strong seal mechanism is required in using Harmonic grease® 4B No.2.
Rotor: Use an oil seal with a spring.
Parts-contacting joints: Use an O-ring or sealing agent paying attention to the warp and flaw on the plain surface.
2. Harmonic grease® 4B No.2 becomes soft at the portion (near the wave generator) that is subject to shear. Although the consistency varies depending on the operating conditions, it is about JIS consistency No.0 up to 00.

Table 016-3

NLGI consistency No.	Mixing consistency range
0	355 to 385
00	400 to 430

■Compatible grease by model

Compatible grease varies depending on the model number and reduction ratio. See the following compatibility table. We recommend SK-1A and SK-2 for general use.

Compatible grease for a reduction ratio of 30

Table 016-5

Model	8	11	14	17	20	25	32
SK-1A	–	–	–	–	○	○	○
SK-2	○	○	○	○	–	–	–
4B No.2	△	△	△	△	□	□	□

Compatible grease for a reduction ratio of 50 or more

Table 016-6

Model	8	11	14	17	20	25	32
SK-1A	–	–	–	–	○	○	○
SK-2	○	○	○	○	△	△	△
4B No.2	–	–	□	□	□	□	□

Model	40	45	50	58	65	80	90	100
SK-1A	○	○	○	○	○	○	○	○
SK-2	△	–	–	–	–	–	–	–
4B No.2	□	□	□	□	□	□	□	□

○ mark: Standard grease
△ mark: Semi-standard grease
□ mark: Recommended grease for long life and high load

Grease specification

Table 016-4

Grease	SK-1A	SK-2	4B No.2
Base oil	Refined oil	Refined oil	Composite hydrocarbon oil
Puffing agent	Lithium soap base	Lithium soap base	Urea
Additive	Extreme-pressure additive, others	Extreme-pressure additive, others	Extreme-pressure additive, others
NLGI consistency No.	No.2	No.2	No.1.5
Consistency (25°C)	265 to 295	265 to 295	290 to 320
Drop point	197°C	198°C	247°C
Appearance	Yellow	Green	Light yellow
Storage life	5 years in sealed condition	5 years in sealed condition	5 years in sealed condition

Grease characteristics

Table 016-7

Grease	SK-1A	SK-2	4B No.2
Durability	○	○	◎
Fretting resistance	○	○	◎
Low-temperature performance	△	△	◎
Grease leakage	◎	◎	△

Excellent ◎
Appropriate ○
Doubtful △

■When to replace grease

Abrasion of the sliding parts of HarmonicDrive® is influenced by grease performance.
Grease performance changes by temperature and deteriorates rapidly as the temperature rises. Therefore, the grease needs to be replaced earlier than usual. Graph 017-1 below indicates the time to replace the grease from the relation between the grease temperature and the total number of rotations when the average load torque is equal to or less than the rated torque.
Obtain the time to replace the grease from the following calculation formula when the average load torque exceeds the rated torque.

Calculation formula when the average load torque exceeds the rated torque

Formula 017-1

$$L_{GT}=L_{GTn} \times \left(\frac{Tr}{T_{av}}\right)^3$$

Symbols of the calculation formula

Table 017-1

L_{GT}	Replacement timing if it is equal to rated torque or more	Number of rotation	————
L_{GTn}	Replacement timing if it is equal to rated torque or less	Number of rotation	See the Graph 017-1.
Tr	Rated torque	N·m,kgf·m	See the "Ratings" of each series.
T_{av}	Average load torque on the output side		Calculation formula: See Page 014.

When to replace grease: L_{GTn} (when the average load torque is equal to or less than the rated torque)

Graph 017-1

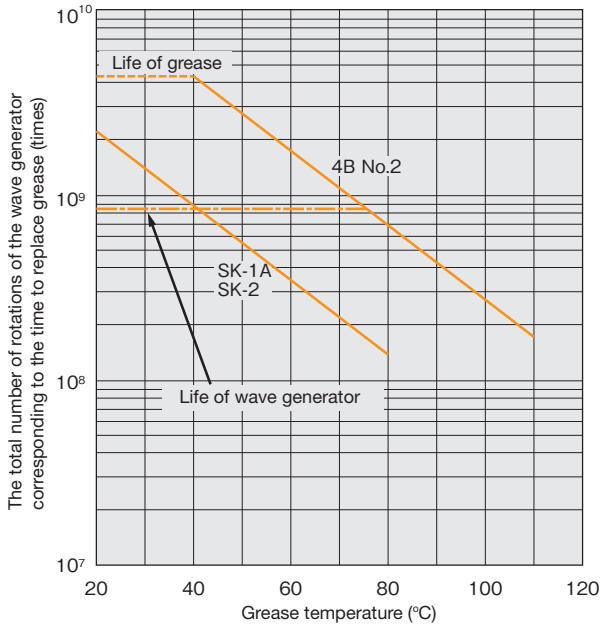

* Life of wave generator indicates the 10% of damage possibility.

■Other precautions

1. Avoid using it with other grease. HarmonicDrive® should be placed in an independent case to be built into the equipment.

2. When you use HarmonicDrive® at constant load or in one direction continuously, contact our branch office as it may cause lubrication problems.

3. Grease leakage of unit type
   Structure of the unit type is designed in view of grease leakage prevention. However, perform enhancement of seal mechanism depending on operating environment.

■See the corresponding pages of the design guide of each series for "Recommended dimensions of the inner wall of the case," "Coating guide" and "Application quantity."

Precautions on using Harmonic grease® 4B No.2

Harmonic grease® 4B No.2 has the fluid characteristic (softening and evenness by shearing) suited to HarmonicDrive®. The characteristic can be utilized to improve the lubricant life when performing the following procedures.

(1) Apply the grease securely to each contacting joint at the beginning of operation.
(2) Remove the dust created by abrasion during running-in period of each contacting joint.
(3) Grease each contacting joint.

■Precautions on securely performing the above mechanism

(1) When greasing
When storing Harmonic grease® 4B No.2 in the container, the consistency is higher. However, please note that the consistency varies depending on the storage period.
Before greasing, agitate the grease in the container to soften.

(2) Aging (running-in)
The aging before the main operation softens the applied grease. More effective greasing performance can be realized when the grease flows around each contacting joint of HarmonicDrive®.
Therefore, the following aging methods are recommended.

- Keep the internal temperature at 80°C or cooler. Do not start the aging at high temperature rapidly.
- Input rotational speed is 1000r/min to 3000r/min. However, the lower rotational speed is more effective. Set the speed lower within the indicated range as possible.
- The time required for aging is 20 minutes or longer.
- Operation range for aging: Keep the output rotational angle larger as possible.

Contact our office if you have any question for handling Harmonic grease® 4B No.2.

Oil lubricant

■Types of oil

The specified standard lubricant is “Industrial gear oil class-2 (extreme pressure) ISO VG68.”
We recommend the following brands as a commercial lubricant.

Table 018-1

Standard	Mobile Oil	ESSO	Showa Shell	COSMO Oil	Japan Energy	NIPPON Oil	Idemitsu Kosan	General Oil	NOK KLUBER
Industrial gear oil class-2 (extreme pressure) ISO VG68	Mobil gear 600XP68	Spartan EP68	Omala Oil 68	Cosmo gear SE68	ES gear G68	Bonock M68, Bonock AX68	Daphne super gear LW68	General Oil SP gear roll 68	Sintesso D-68EP

■When to replace oil

First time····· 100 hours after starting operation
Second time or after····· Every 1000 operation hours or every 6 months
Note that you should replace the oil earlier than specified if the operating condition is demanding.

■See the corresponding pages of the design guide of each series for “Oil level,” “Oil groove working size of the flexspline” and “Oil quantity.”

■Other precautions

1. Avoid using it with other grease. HarmonicDrive® should be put in an independent case to be built into the equipment.

2. When you use model number 50 or upper level at around the permissible input rotational speed from the ratings, you should contact our branch office as it may cause lubrication problems.

Lubricant for special environments

When the ambient temperature is special (other than the "temperature range of the operating environment" on Page 016-2), you should select a lubricant taking the operating temperature range shown below into consideration.

Harmonic grease® 4B No.2

Table 019-1

Type of lubricant	Operating temperature range	Available temperature range
Grease	–10°C to + 110°C	–50°C to + 130°C

High temperature lubricant

Table 019-2

Type of lubricant	Lubricant and manufacturer	Available temperature range
Grease	Mobil grease 28: Mobil Oil	–5°C to + 160°C
Oil	Mobil SHC-626: Mobil Oil	–5°C to + 140°C

Low temperature lubricant

Table 019-3

Type of lubricant	Lubricant and manufacturer	Available temperature range
Grease	Maltemp SH-KII: Kyodo Oil	–30°C to + 50°C
	Isoflex LDS-18 special A: NOK KLUBER	–25°C to + 80°C
Oil	SH-200-100CS: Toray Silicon	–40°C to + 140°C
	Sintesso D-32EP: NOK KLUBER	–25°C to + 90°C

The operating temperature range of Harmonic grease® 4B No.2 is the temperature at the lubricating section with the performance and characteristics of HarmonicDrive® taken into consideration. (It is not ambient temperature.)

As the available temperature range indicates the temperature of the independent lubricant, restriction is added on operating conditions (such as load torque, rotational speed and operating cycle) of HarmonicDrive®. When the ambient temperature is very high or low, the materials of the parts of HarmonicDrive® need to be reviewed. Contact us in this case.

You can use Harmonic grease® 4B No.2 in the available temperature range if you consider increase in the running torque of HarmonicDrive® due to increase in viscosity at low temperature and the grease life due to oxidization and deterioration at high temperature.

On rigidity

Rigidity and backlash of the drive system greatly affects the performance of the servo system. A detailed review of these items is required before designing the equipment and selecting a model number.

■Rigidity

Fixing the input side (wave generator) and applying torque to the output side (flexspline) generates torsion almost proportional to the torque on the output side. Figure 020-1 shows the torsional angle quantity on the output side when the torque applied on the output side starts from zero, increases up to $+T_0$ and decreases down to $-T_0$. This is called the "Torque – torsional angle diagram," which normally draws a loop of 0 – A – B – A' – B' – A. The slope described in the "Torque – torsional angle diagram" is represented as the spring constant for the rigidity of HarmonicDrive® (unit: N·m/rad).
As shown in Figure 020-2, this "Torque – torsional angle diagram" is divided into 3 partitions, and the spring constants in the area are represented as K_1, K_2 and K_3.

K_1 The spring constant when the torque changes from [zero] to [T_1]
K_2 The spring constant when the torque changes from [T_1] to [T_2]
K_3 The spring constant when the torque changes from [T_2] to [T_3]

■See the corresponding pages of each series for values of the spring constants (K_1, K_2, K_3) and the torque-torsional angles (T_1, T_2- θ_1, θ_2).

Torque - torsional angle diagram

Fig. 020-1

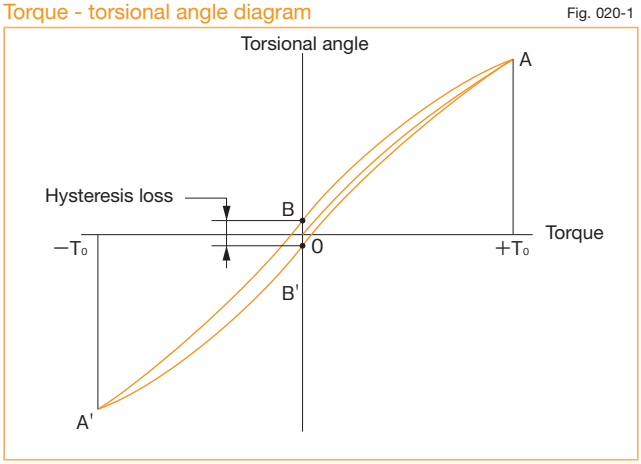

Partitioning of spring constant

Fig. 020-2

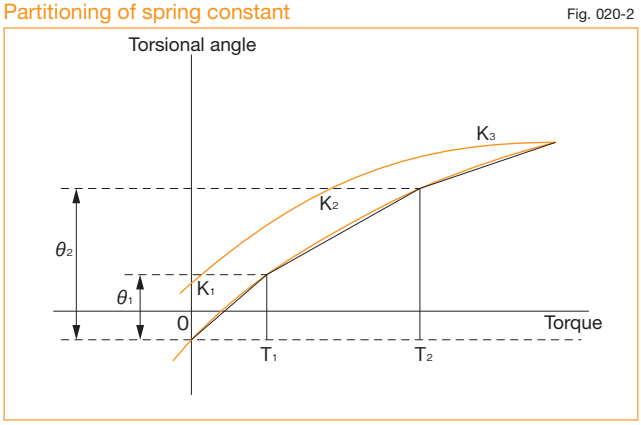

■Example of calculating torsional quantity

The torsional quantity (θ) is obtained from the example of CSF-25-100-2A-GR.

When the load torque is extremely small (T_{L1}=2.9 N·m)

As the torque is T_1 or less, torsional quantity θ_{L1} is represented as follows.

$\theta_{L1} = T_{L1}/K_1$
$= 2.9/3.1\times10^4$
$= 9.4\times10^{-5}$rad (0.33 arc-min)

When the load torque is T_{L2}=39 N·m)

As the torque between T_1 and T_2, torsional quantity θ_{L2} is represented as follows.

$\theta_{L2} = \theta_1 + (T_{L2} - T_1)/K_2$
$= 4.4\times10^{-4} + (39-14)/5.0\times10^4$
$= 9.4\times10^{-4}$rad (3.2 arc-min)

The total torsional quantity when the load is applied the other way round will be double the quantity obtained above plus the backlash quantity.

* The torsional quantity indicates the value of the stand-alone component. Note that the torsional quantity of the output shaft is not included.

■Hysteresis loss

As shown in Figure 020-1, when the torque is applied up to the rated value and is brought back to [zero], the torsional angle does not become absolutely [zero] and a small amount remains (B – B'). This is called hysteresis loss.

■See the corresponding pages of each series for hysteresis loss quantity.

■Backlash

As hysteresis loss is mainly generated by internal abrasion, it is hardly generated, and only a small allowance is represented in the diagram when the torque is extremely small.
As the allowance of the tooth engagement is suppressed to [zero] for HarmonicDrive®, the backlash quantity is caused by the clearance of Oldham's coupling (self-aligning mechanism) of the wave generator. The rigid type has no clearance. The value measured on the output side by fixing the input side is very small as shown on the corresponding page of each series.

* See the corresponding pages of each series for the backlash quantity.

Angle transmission accuracy

Angle transmission accuracy indicates the difference between the logical rotating angle and the actual rotating angle as the angle transmission error when any rotating angle is given as an input.

■See the corresponding pages of each series for angle transmission accuracy values.

Example of measurement

Graph 021-1

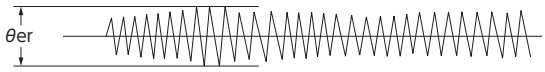

Table 021-1

θ_{er}	Angle transmission error
θ_1	Input rotating angle
θ_2	Actual output rotating angle
R	Reduction ratio of HarmonicDrive® (i =1:R)

Formula 021-1

$$\theta er=\theta_2-\frac{\theta_1}{R}$$

On vibration

The angle transmission error elements of HarmonicDrive® may appear as rotating vibration of the load side inertia. Especially when the characteristic frequency of the vibration system including HarmonicDrive® overlaps that of the chassis or load inertia, it generates a resonant condition that amplifies angle transmission error elements of HarmonicDrive®. Observe the design guide of each series.

Two angle transmission error elements of HarmonicDrive® correspond to a cycle of the input shaft from the mechanical viewpoint of HarmonicDrive®. Therefore, the frequency is double the input frequency as it is the main element of the error.

If the characteristic frequency of the vibration system including HarmonicDrive® is F=15 Hz, the input rotating speed (N) is expressed as shown below.

Formula 021-2

$$N=\frac{15}{2}\cdot 60=450\text{r/min}$$

The resonant condition is generated in the rotating speed area (450 r/min).

How to obtain the characteristic frequency of the vibration system including HarmonicDrive®

Formula 021-3

$$f=\frac{1}{2\pi}\sqrt{\frac{K}{J}}$$

Symbol of the calculation formula

Table 021-2

f	The characteristic frequency of the vibration system including HarmonicDrive®	Hz	
K	Spring constant of HarmonicDrive®	N·m/rad	See pages of each series.
J	Load inertia	kg·m^2	

On starting torque

Starting torque means the instantaneous "starting torque" with which the output side (low-speed side) starts rotation when a torque is applied on the input side (high-speed side) of HarmonicDrive® built into the case. The values in the table of each series indicate the maximum value, and the lower-limit value indicates approximately 1/2 to 1/3 of the maximum value.

Measuring condition: No-load, ambient temperature: +20°C

■See the corresponding pages of each series for starting torque values.

* Use the values in the table of each series as reference values as they vary depending on the usage conditions.

On overdrive starting torque

Overdrive starting torque means the instantaneous "starting torque" with which the input side (high-speed side) starts rotation when a torque is applied on the output side (low-speed side) of HarmonicDrive® built into the case. The values in the table of each series indicate the maximum value, and the lower-limit value indicates approximately 1/2 of the maximum value.

Measuring condition: No-load, ambient temperature: +20°C

■See the corresponding pages of each series for overdrive starting torque values.

* Use the values in the table of each series as reference values as they vary depending on the usage conditions.

On no-load running torque

No-load running torque means the torque on the input side (high-speed shaft side) required to put HarmonicDrive® under a no-load condition. The graph of the no-load running torque shown in this catalog depends on the measuring condition shown in Table 023-1. Add the correction values shown by each series to all reduction ratios except those of 100.

■See the corresponding pages of on each series for no-load running torque values.

Measuring condition

Table 023-1

Reduction ratio 100			
Lubrication condition	Grease lubrication	Name	Harmonic grease® SK-1A
			Harmonic grease® SK-2
		Application qty.	Appropriate application qty. (See pages of each series)
The torque value is the value after a trial run for two hours or longer at an input of 2000 r/min.			

* Contact us for oil lubrication.

Efficiency characteristics

The efficiency varies depending on the following conditions.
■Reduction ratio
■Input rotational speed
■Load torque
■Temperature
■Lubrication condition (Type of lubricant and the quantity)
The efficiency characteristics of each series shown in this catalog depends depend on the measuring condition shown in Table 023-2.

■See the corresponding pages of on each series for efficiency values.

Measuring condition

Table 023-2

Built-in	Measurement by building the recommended built-in precision into the product		
Load torque	The rated torque shown in the ratings (see the corresponding pages on each series)		
Lubricating condition	Grease lubrication	Name	Harmonic grease® SK-1A
			Harmonic grease® SK-2
		Application qty.	Appropriate application qty. (see the pages on each series)

* Contact us for oil lubrication.

■Efficiency correction coefficient

If the load torque is smaller than the rated torque, the efficiency value lowers. Obtain correction coefficient Ke from the efficiency correction coefficient graph of each series to obtain the efficiency using the following example of calculation.

Example of calculation

Efficiency η (%) under the following condition is obtained from the example of CSF-20-80-2A-GR.
Input rotational speed: 1000 r/min
Load torque: 19.6 N·m
Lubrication method: Grease lubrication (Harmonic grease® SK-1A)
Lubricant temperature: 20°C
Since the rated torque of model number 20 with a reduction ratio of 80 is 34 N·m (Ratings: Page 039), the torque ratio α is 0.58. (α=19.6/34=0.58)

■The efficiency correction coefficient is Ke=0.93 from Graph 023-1.
■Efficiency η at load torque 19.6 N·m: η=Ke•ηR=0.93 x 78=73%

Efficiency correction coefficient (CSF series)

Graph 023-1

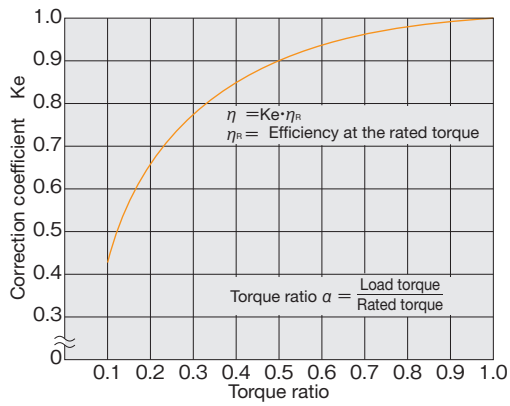

* Efficiency correction coefficient Ke=1 holds when the load torque is greater than the rated torque.

Precaution on design

Design guideline

Pay attention to the following points to bring out the performance of HarmonicDrive®.

(1) The input shaft, the circular spline, the output shaft and the case shall be concentric.

(2) As thrust force is generated on the wave generator, input shaft should be structured to support the force. For thrust force, see Page 027.

(3) Even though HarmonicDrive® is compact, it transmits a large torque. Therefore, join the flexspline and the output shaft with a bolt and compatible tightening torque.

(4) As the flexspline is subject to elastic deformation, the recommended size should be applied to the inner wall of the case.

(5) The input shaft and the output shaft should be supported with two points with appropriate bearing space. It should be structured to bear all radial loads and thrust loads so that no extra force is applied to the wave generator and the flexspline.

(6) The mounting flange diameter of the flexspline shall not exceed the boss diameter of the flexspline. Attach “R” on the flange that is in contact with the diaphragm. Use the recommended size for parts.

(7) C-type retaining ring is used to hold the hub of the wave generator. The hook of the retaining ring shall not interfere with the case.

Fig. 024-1

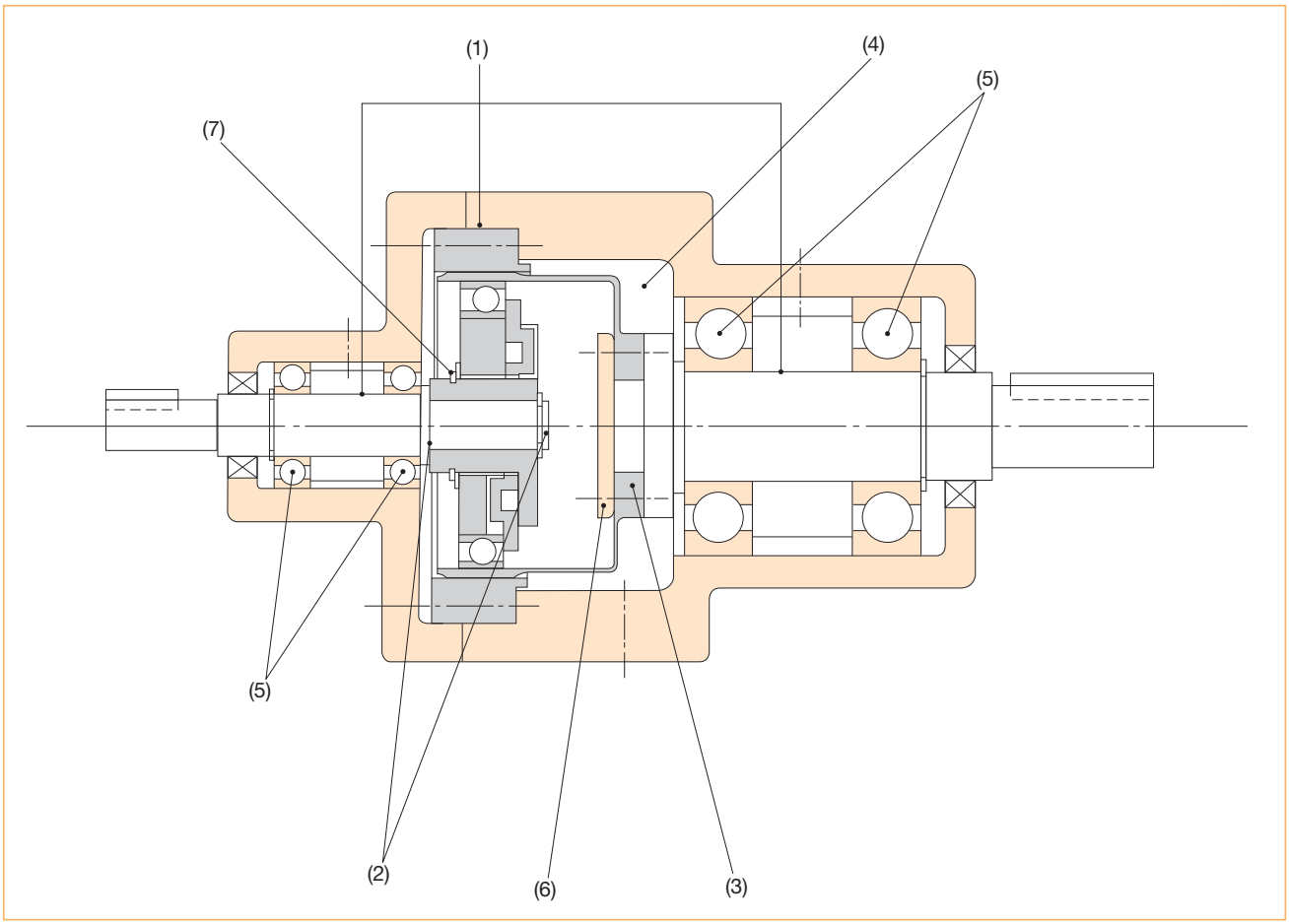

Bearing support of the input and output shafts

As the component type endures external load, the input shaft and the output shaft should be supported with two points with appropriate bearing space. It should be structured to bear all radial loads and thrust loads so that no extra force is applied to the wave generator and the flexspline.
Use the bearing pressurized to the radial and thrust directions to remove the gap.
An example of bearing layout is shown in Figure 025-1.

Fig. 025-1

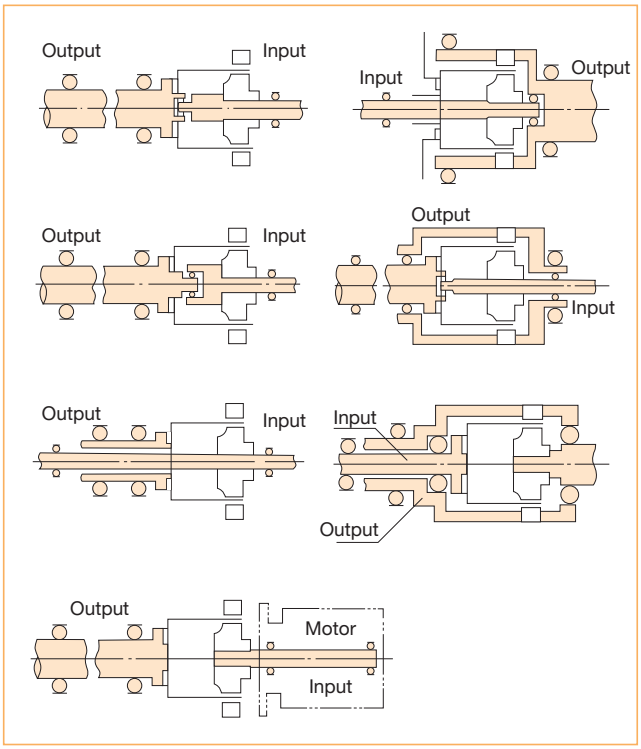

On the wave generator

■Structure of the wave generator

The wave generators of HarmonicDrive® include an Oldham's coupling type with a self-aligning structure and an integrated rigid type without a self-aligning structure, and which is used depends on the series.
See the diagram of the appearance of each series for details. The basic structure of the wave generator and the shape are shown below.

Fig. 026-1

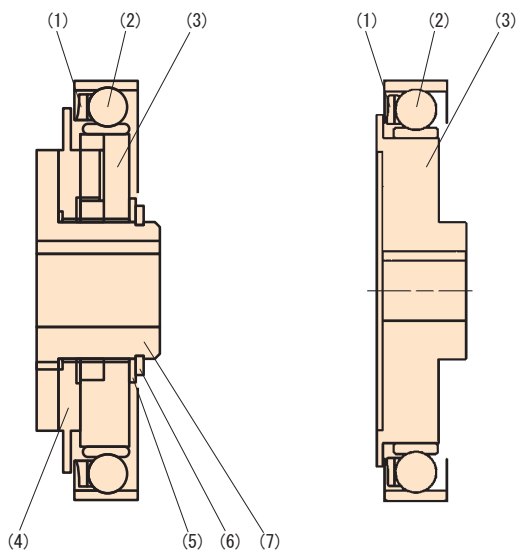

(1) Retainer
(2) Wave generator bearing
(3) Wave generator plug
(4) Insert
(5) Rubwasher
(6) C-type retaining ring
(7) Wave generator hub

Structure of Oldham's coupling

Fig. 026-2

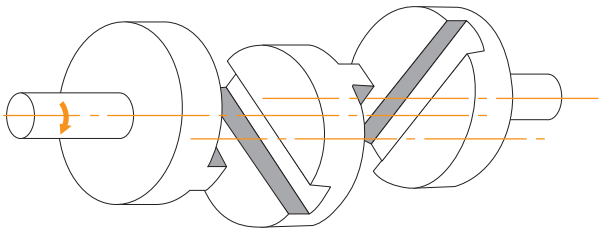

■Maximum hole diameter size of the component type

The standard hole diameter of the wave generator is as shown in the dimensional outline drawing and may be changed in the range up to the maximum dimension shown in the table. The JIS standard is recommended for the key groove size. The valid length of the key shall be the value fully durable for the transmission torque.

* The shape can be changed into special forms for taper holes and so on.

Oldham's coupling mechanism may be eliminated to make a hole diameter larger than the maximum size. The maximum hole diameter can be up to the value shown in the table below taking deformation of the wave generator plug by load torque into consideration.
(This is the value including the dimension of the key groove depth.)

If a hole diameter larger than this is required, please contact us.

Hole diameter of the wave generator

Fig.027 -1

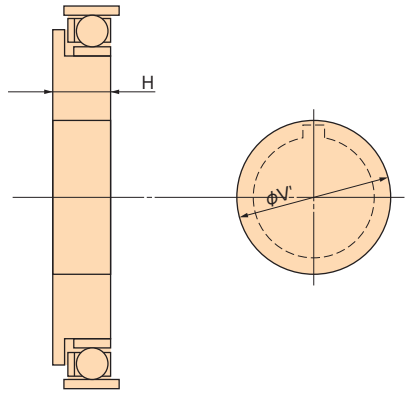

Hole diameter of the wave generator hub

Table 027-1
Unit: mm

Model number	8	11	14	17	20	25	32	40	45	50	58	65	80	90	100
Standard dim. (H7)	3	5	6	8	9	11	14	14	19	19	22	24	28	28	28
Prepared hole size	—	—	3	4	5	6	6	10	10	10	13	16	16	19	22
Maximum size	—	—	8	10	13	15	15	20	20	20	25	30	35	37	40

Plug maximum diameter of installing the wave generator plug directly on the input shaft

Table 027-2
Unit: mm

Model number	8	11	14	17	20	25	32	40	45	50	58	65	80	90	100
Max. hole dia.ϕV'	10	14	17	20	23	28	36	42	47	52	60	67	72	84	95
Min. plug thick. $^{0}_{-0.1}$	5.7	6.7	7.2	7.6	11.3	11.3	13.7	15.9	17.8	19	21.4	23.5	28.5	31.3	34.9

■Thrust force of the wave generator and shaft fixation

Thrust force is applied on the wave generator during operation due to elastic deformation of the flexspline of HarmonicDrive®. The thrust force used as a reducer ((1), (2) and (3) on Page 010) works in the diaphragm direction of the flexspline (Figure 027-2), while the thrust force used as an overdrive ((4), (5) and (6) on Page 010) works in the opposite direction (Figure 027-2).
You can obtain the thrust force (maximum value) of the wave generator with the following calculation formula. Thrust force varies depending on the operating condition. It tends to increase and shows almost the same value as that obtained by the calculation formula when the torque is high, when the speed is very low and when the rotation is constant and continuous. Work out a design to eliminate the thrust force of the wave generator in either case.

(Note)
Contact us when you fix the wave generator hub and the input shaft with a retaining screw.

Thrust force direction of the wave generator

Fig.027 -2

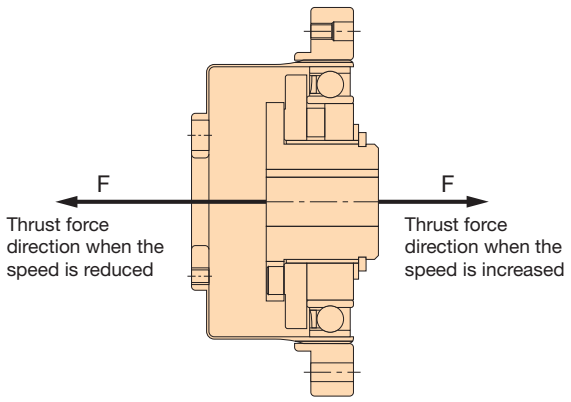

Calculation formula of thrust force

Table027 -3

Reduction ratio	Calculation formula
30	$F=2\times\frac{T}{D}\times0.07\times\tan 32°$
50	$F=2\times\frac{T}{D}\times0.07\times\tan 30°$
80 or more	$F=2\times\frac{T}{D}\times0.07\times\tan 20°$

Symbols of the calculation formula

Table027 -4

F	Thrust force	N	See Figure 027-2
D	(Model Number)×0.00254	m	
T	Output torque	N·m	

Example of calculation

Formula 027-1

Model name: CSF series
Model number: 32
Reduction ratio: 50
Output torque: 382 N·m
(maximum permissible momentary torque)

$$F=2\times\frac{382}{(32\times0.00254)}\times0.07\times\tan 30^{\circ}$$

$$F=380N$$

Precautions on assembly

Sealing mechanism

The following sealing mechanism is required to prevent grease leakage and maintain the high durability of HarmonicDrive®.

- Rotating and sliding area ····· Oil seal (with a spring). Take care regarding flaws on the shaft.
- Flange mating face and mating ··· O-ring and seal agent. Take care regarding distortion on the plane and how the O-ring is engaged.
- Screw hole area ····· Use a screw lock agent (Locktite 242 is recommended) or seal tape.

(Note)
Observe the description above for the particular use of Harmonic grease® 4B No.2.

Sealing area and the recommended sealing method for the unit type

Table 028-1

Area requiring sealing		Recommended sealing method
Output side	Pass-through hole in the center of the output flange and the output flange mating face	Use O-ring (attached to our product)
	Spanner screw area	Screw lock agent with sealing effect (Locktite 242 is recommended)
Input side	Flange mating face	Use O-ring (attached to our product)
	Motor output shaft	Select one with an oil seal. Those without an oil seal should be structured so that an oil seal is attached to the motor mounting flange.

Precautions on assembly

HarmonicDrive® may generate vibration and abnormal sound due to problems during assembly. Perform assembly based on the following precautions.

■Precautions on the wave generator

1. Avoid such assembly where excessive force is applied to the wave generator bearing. You can smoothly insert the wave generator by turning it.
2. Pay attention so that the effect of misalignment and turnover is within the recommended value (see “Built-in precision” of each series) for the wave generator without Oldham’s coupling mechanism.

■Precautions on the circular spline

1. Is flatness of the mounting surface poor or distorted?
2. Is any embossment of the screw hole area, burr or trapped foreign matter found?
3. Have chamfering and relief working of the corner been conducted to prevent interference of the corner of the circular spline in the house built-in area?
4. Can the circular spline rotate built in the house? Does it interfere with or catch on any part?
5. Does any bolt inserted into the mounting bolt hole interfere with the circular spline and rotate heavily due to the bolt hole being misaligned or oblique?
6. Do not tighten the bolts with the specified torque all at once. Tighten the bolts temporarily with about half the specified torque, and then tighten them with the specified torque. Tighten them in an even, crisscross pattern.
7. Avoid pinning the circular spline if possible as it may reduce the rotational precision.

■Precautions on the flexspline

1. Is flatness of the mounting surface poor or distorted?
2. Is any embossment of the screw hole area, burr or trapped foreign matter found?
3. Have chamfering and relief working of the corner been conducted to prevent the interference of the corner of the circular spline in the house built-in area?
4. Does any bolt inserted into the mounting bolt hole interfere with the circular spline and rotate heavily due to the bolt hole being misaligned or oblique?
5. Do not tighten the bolts with the specified torque all at once. Tighten the bolts temporarily with about half the specified torque, and then tighten them with the specified torque. Tighten them in an even, crisscross pattern.
6. Does it engage with the circular spline in an extremely unbalanced way when it is combined? If it is unbalanced, they could be misaligned or not upright.
7. Avoid hitting the tip of the teeth on the opening and inserting the circular spline with excessive force in assembling it

■On anti-rust provision

The surface of HarmonicDrive® is not anti-rust treated. Apply anti-rust agent to the surface if required. Contact us if you would like us to provide the surface with anti-rust treatment.

*** See also “For Safe Use of HarmonicDrive® component and unit” on page 321.**

"Dedoi-dal" state

It is normal for the flexspline to engage with the circular spline symmetrically as shown in Figure 029-1. However, if the ratcheting phenomenon, which is described on Page 013, is caused or if three parts are forcibly inserted and assembled, engagement of the teeth may be out of alignment as shown in Figure 029-2. This is called "dedoi-dal". Note that the flexspline will be exhausted and damaged earlier if it continues operating without the problem being fixed.

■How to check "dedoi-dal"

By performing the following methods, check whether "dedoi-dal" is caused or not.

(1) Judging by the irregular torque generated when the wave generator turns

1) Lightly turn the input shaft with your hand in a no-load condition. If you can turn it with average force, it is normal. If it turns irregularly, "dedoi-dal" could have been caused.

2) Turn the wave generator in a no-load condition if it is attached to a motor. If the average current value of the motor is about 2 to 3 times the normal value, "dedoi-dal" could have been caused.

(2) Judging by measuring vibration on the body of the flexspline

The scale deflection of the dial gauge draws a sine wave as shown by the solid line in Graph 029-1 when it is normally assembled. When "dedoi-dal" is caused, the gauge draws a deflected wave shown by the dotted line as the flexspline is out of alignment.

Normal engagement status

Fig. 029-1

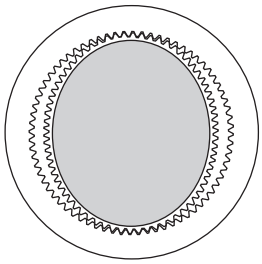

"Dedoi-dal" status

Fig. 029-2

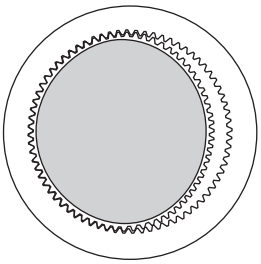

Deflection of the dial gauge

Graph 029-1

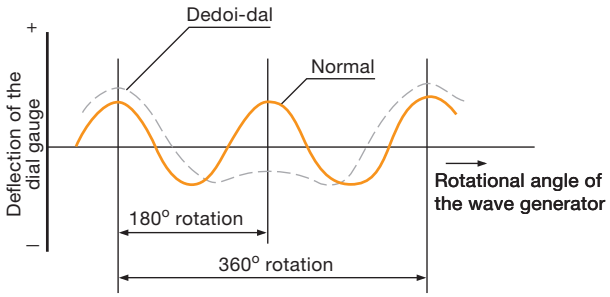

Measuring the deflection on the body of the flexspline

Fig. 029-3

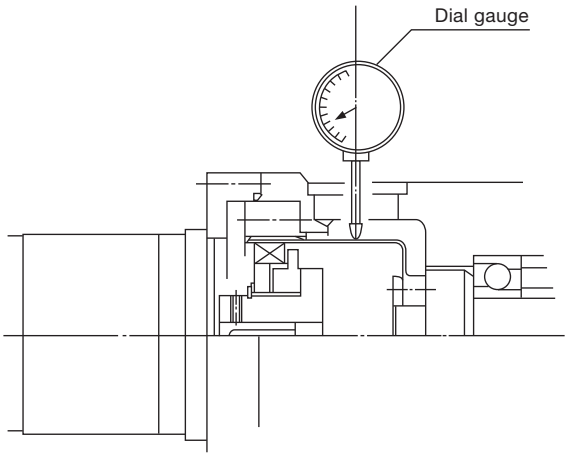

Checking main roller bearing

A precision cross roller bearing is built in the unit type and the gear head type to directly support the external load (output flange) (precision 4-point contact ball bearing for the CSF-mini series). Check the maximum load moment load, lifespan of the bearing and static safety coefficient to fully bring out the performance of the unit type.

■See the corresponding pages on each series for main shaft bearing.

Checking procedure

(1) Checking the maximum load moment load (Mmax)

Obtain the maximum load moment load (Mmax). → Maximum load moment load (Mmax) ≦ permissible moment (Mc)

(2) Checking the life

Obtain the average radial load (Fravg) and the average axial load (Faavg). → Obtain the radial load coefficient (x) and the axial load coefficient (y). → Calculate the life and check it.

(3) Checking the static safety coefficient

Obtain the static equivalent radial load coefficient (Po). → Check the static safety coefficient. (fs)

How to obtain the maximum load moment load

Maximum load moment load (M_{max}) is obtained as follows.
Make sure that $M_{max} \leqq Mc$.

Formula 030-1

$$M_{max} = Fr_{max}(Lr+R) + Fa_{max} \cdot La$$

Symbol of formula 030-1

Table 030-1

Fr_{max}	Max. radial load	N(kgf)	See Fig. 030-1.
Fa_{max}	Max. axial load	N(kgf)	See Fig. 030-1.
Lr, La	—	m	See Fig. 030-1.
R	Offset amount	m	See Fig. 030-1 and "Specification of the main roller bearing" of each series.

External load influence diagram

Fig. 030-1

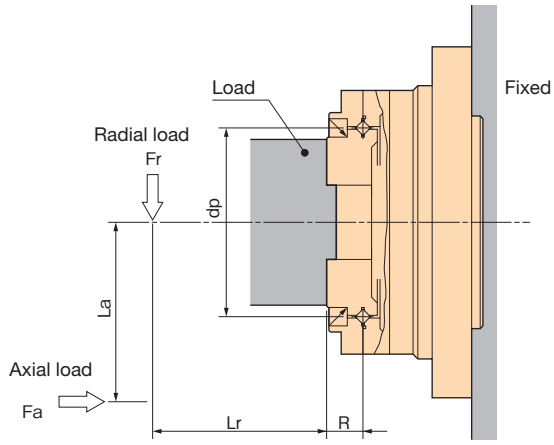

How to obtain the average load

(Average radial load, average axial load, average output rotational frequency)
If the radial load and the axial load fluctuate, they should be converted into the average load to check the life of the bearing.

How to obtain the average radial load (Fr_{av})

Formula 031-1

(Cross roller bearing)

$$Fr_{av} = \sqrt[10/3]{\frac{n_1t_1(|Fr_1|)^{10/3} + n_2t_2(|Fr_2|)^{10/3} \cdots + n_nt_n(|Fr_n|)^{10/3}}{n_1t_1 + n_2t_2 \cdots + n_nt_n}}$$

(4-point contact ball bearing)

$$Fr_{av} = \sqrt[3]{\frac{n_1t_1(|Fr_1|)^3 + n_2t_2(|Fr_2|)^3 \cdots + n_nt_n(|Fr_n|)^3}{n_1t_1 + n_2t_2 \cdots + n_nt_n}}$$

Note that the maximum radial load within the t_1 section is Fr_1 and the maximum radial load within the t_3 section is Fr_3.

How to obtain the average axial load (Fa_{av})

Formula 031-2

(Cross roller bearing)

$$Fa_{av} = \sqrt[10/3]{\frac{n_1t_1(|Fa_1|)^{10/3} + n_2t_2(|Fa_2|)^{10/3} \cdots + n_nt_n(|Fa_n|)^{10/3}}{n_1t_1 + n_2t_2 \cdots + n_nt_n}}$$

(4-point contact ball bearing)

$$Fa_{av} = \sqrt[3]{\frac{n_1t_1(|Fa_1|)^3 + n_2t_2(|Fa_2|)^3 \cdots + n_nt_n(|Fa_n|)^3}{n_1t_1 + n_2t_2 \cdots + n_nt_n}}$$

Note that the maximum axial load within the t_1 section is Fa_1 and the maximum axial load within the t_3 section is Fa_3.

How to obtain the average output rotational frequency (N_{av})

Formula 031-3

$$N_{av} = \frac{n_1t_1 + n_2t_2 \cdots + n_nt_n}{t_1 + t_2 \cdots + t_n}$$

Graph 031-1

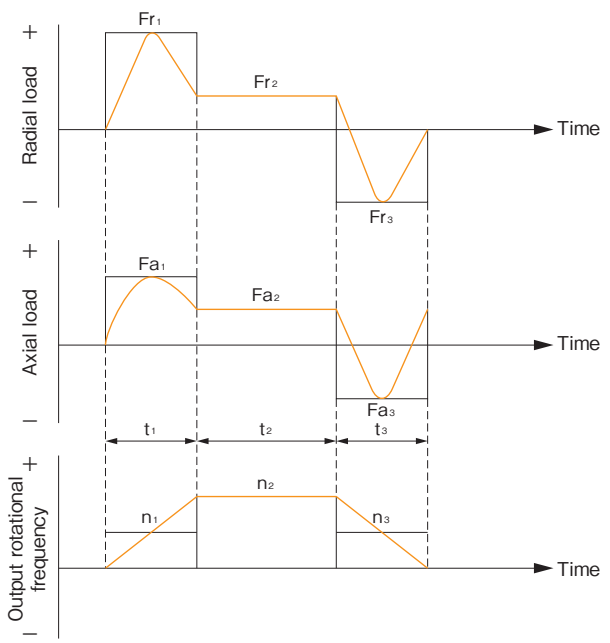

How to obtain the radial load coefficient (X) and thrust load coefficient (Y)

Formula 031-4

How to obtain the load coefficient	X	Y
$\frac{Fa_{av}}{Fr_{av}+2\ (Fr_{av}(Lr+R)\ +\ Fa_{av}\cdot La)/dp} \leqq 1.5$	1	0.45
$\frac{Fa_{av}}{Fr_{av}+2\ (Fr_{av}(Lr+R)\ +\ Fa_{av}\cdot La)/dp} > 1.5$	0.67	0.67

Symbol of formula 031-4

Table 031-1

Fr_{av}	Average radial load	N(kgf)	See "How to obtain the average load." See Formula 031-1.
Fa_{av}	Average axial load	N(kgf)	See "How to obtain the average load." See Formula 031-2.
Lr, La	———	m	See Fig. 030-1.
R	Offset amount	m	See Fig. 030-1 and "Specification of the main roller bearing" of each series.
dp	Pitch circle diameter of a roller	m	See Fig. 030-1 and "Specification of the main roller bearing" of each series.

How to obtain the life

Obtain the life of the bearing by Formula 032-1.
You can obtain the dynamic equivalent radial load (Pc) by Formula 032-2.

Formula 032-1

(Cross roller bearing)

$$L_{10} = \frac{10^6}{60 \times N_{av}} \times \left(\frac{C}{fw \cdot Pc} \right)^{10/3}$$

(4-point contact ball bearing)

$$L_{10} = \frac{10^6}{60 \times N_{av}} \times \left(\frac{C}{fw \cdot Pc} \right)^{3}$$

Symbols of Formula 032-1

Table 032-1

L_{10}	Life	hour	———
N_{av}	Average output rotational speed	r/min	See “How to obtain the average load.” .
C	Basic dynamic load rating	N(kgf)	See “Specification of the main roller bearing” of each series.
Pc	Dynamic equivalent radial load coefficient	N(kgf)	See Formula 032-2.
fw	Load coefficient	——	See Table 032-3.

Load coefficient

Table 032-3

Load status	fw
During smooth operation without shock or vibration	1 to 1.2
During normal operation	1.2 to 1.5
During operation with shock and vibration	1.5 to 3

Formula 032-2

$$Pc = X \cdot \left(Fr_{av} + \frac{2(Fr_{av}(Lr + R) + Fa_{av} \cdot La)}{dp} \right) + Y \cdot Fa_{av}$$

Symbols of Formula 032-2

Table 032-2

Fr_{av}	Average radial load	N(kgf)	See “How to obtain the average load.” See Formula 031-1.
Fa_{av}	Average axial load	N(kgf)	See “How to obtain the average load.” See Formula 031-2.
dp	Pitch circle diameter of a roller	m	See Fig. 030-1 and “Specification of the main roller bearing” of each series.
X	Radial load coefficient	——	See Formula 031-4.
Y	Axial load coefficient	——	See Formula 031-4.
Lr,La	———	m	See Figure 030-1.
R	Offset amount	m	See Fig. 030-1 and “Specification of the main roller bearing” of each series.

How to obtain the life under oscillating movement

Obtain the life of the bearing under oscillating movement by Formula 033-1.

Formula 033-1

(Cross roller bearing)

$$Loc = \frac{10^6}{60 \times n1} \times \frac{90}{\theta} \times \left(\frac{C}{fw \cdot Pc}\right)^{10/3}$$

(4-point contact ball bearing)

$$Loc = \frac{10^6}{60 \times n1} \times \frac{90}{\theta} \times \left(\frac{C}{fw \cdot Pc}\right)^{3}$$

Symbols of Formula 033-1

Table 033-1

Loc	Rated life under oscillating movement	hour	——
n1	No. of reciprocating oscillation per min.	cpm	——
C	Basic dynamic load rating	N(kgf)	See “Specification of the main roller bearing” of each series.
Pc	Dynamic equivalent radial load coefficient	N(kgf)	See Formula 032-2.
fw	Load coefficient	——	See Table 032-3.
θ	Oscillating angle /2	Degree	See Fig. 033-1.

Fig. 033-1

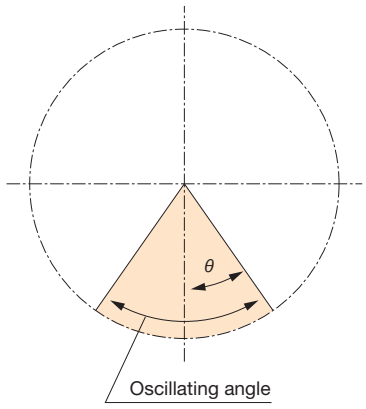

(Note)
When the oscillating angle is small (less than 5°), it is difficult to generate an oil film on the contact surface of the orbit ring, and the rolling element and fretting may be generated. Contact us if this happens.

How to obtain the static safety coefficient

In general, the basic static load rating (Co) is considered to be the permissible limit of the static equivalent load. However, obtain the limit based on the operating and required conditions.
Obtain the static safety coefficient of the roller bearing by Formula 034-1. General values under the operating condition are shown in Table 034-3. You can obtain the static equivalent radial load (Po) by Formula 034-2.

Formula 034-1

$$fs = \frac{Co}{Po}$$

Formula 034-2

$$Po = Fr_{max} + \frac{2M_{max}}{dp} + 0.44Fa_{max}$$

Symbols of Formula 034-1

Table 034-1

Co	Basic static load rating	N(kgf)	See “Specification of the main roller bearing” of each series.
Po	Static equivalent radial load coefficient	N(kgf)	See Formula 034-2.

Symbols of Formula 034-2

Table 034-2

Fr_{max}	Max. radial load	N(kgf)	See “How to obtain the maximum load moment load” on Page 030.
Fa_{max}	Max. axial load	N(kgf)	
M_{max}	Max. load moment load	N·m (kgf·m)	
dp	Pitch circle diameter of a roller	m	See Fig. 030-1 and “Specification of the main roller bearing” of each series.

Static safety coefficient

Table 034-3

Operating condition of the roller bearing	fs
When high rotation precision is required	≧3
When shock and vibration are expected	≧2
Under normal operating condition	≧1.5

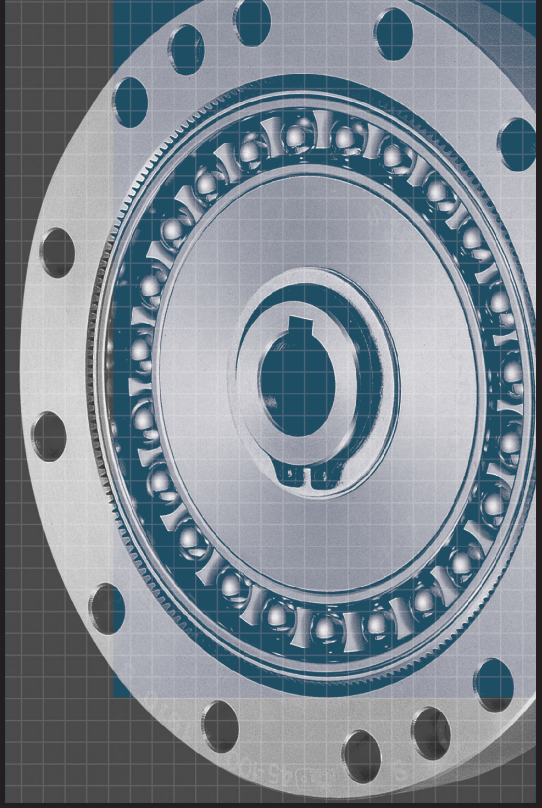

CSG/CSF Series

Component Type CSG/CSF

Features

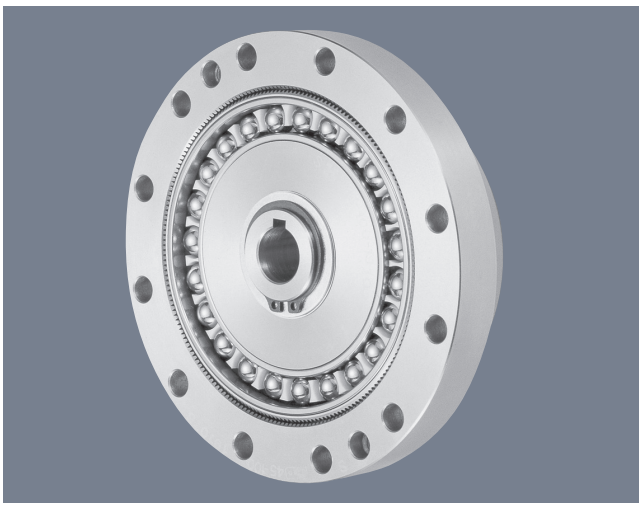

■CSG/CSF series component type

The CSG/CSF component type provides full product lineup and allows customers to select models most suited to their requirements, providing for needs demanding accelerating technical innovation such as high performance, high speed, high load capacity, high density and miniaturization.
The CSG/CSF component type consists of only three basic parts. The type directly built in the machine and the equipment enhance the degree of freedom in design.

Features of CSG/CSF series

- ■Compact and simple design
- ■High torque capacity
- ■High stiffness
- ■Non-backlash
- ■High positioning and rotational accuracies
- ■Coaxial input and output

Structure of CSG/CSF series component type

Fig. 036-1

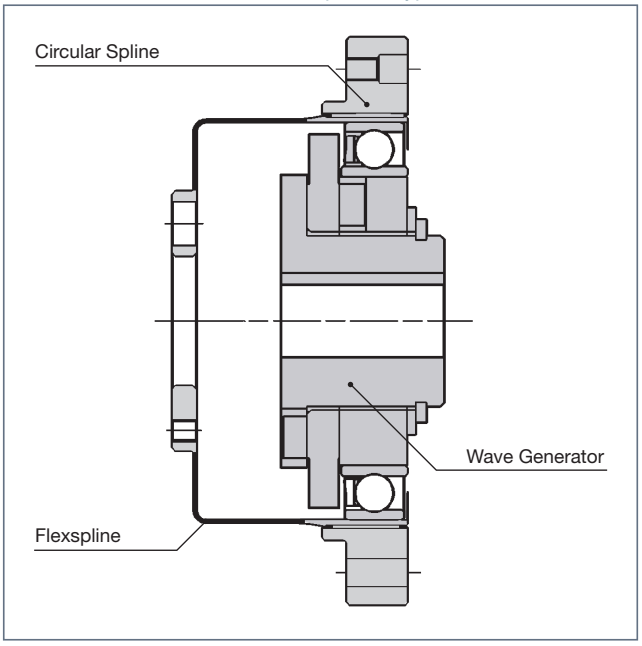

New variations

CSG series: for high torque
- •Torque capacity has been improved by 30% compared to the CSF series.
- •The life has been improved by 43% (10,000 hours) compared to the CSF series.

Reduction ratio of 30: for high-speed
- •A reduction ratio of 30 has been achieved, keeping the merits of non-backlash HarmonicDrive®.

CSF8, 11 series: miniaturization
- •The merits of the IH tooth profile have been achieved for compact models.
- •Torque capacity has been improved by 30% compared to the conventional CS series.
- •Rigidity has been improved by 100% compared to the conventional CS series.
- •The life has been extensively improved.

Comparison between CSG series and CSF series

Graph 036-1

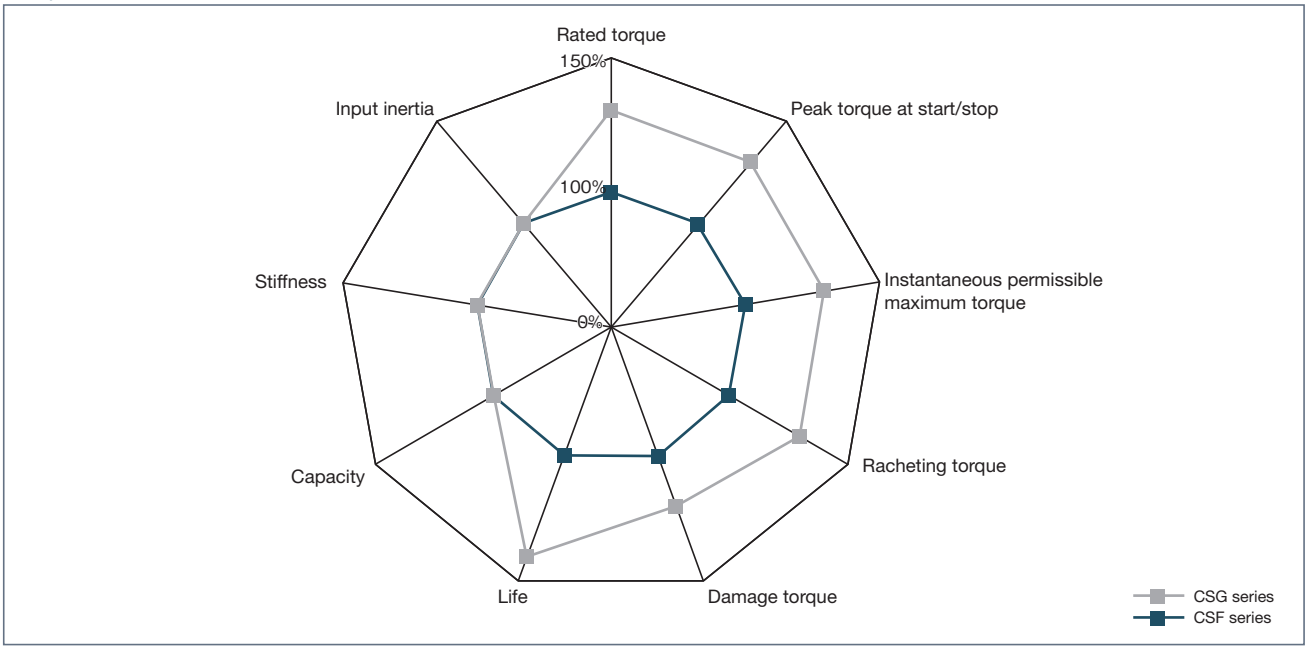

Model and Symbol

CSG - 25 - 100 - 2A - GR -SP1 - SP2

Table 037-1

Model name	Model No.	Reduction ratio*					Model		Special specification
CSG	14	50	80	100	—	—	2A=component type 2UH=unit type	Precision class GR= High-precision HarmonicDrive® * Model number 14 and 17 are R. * Not indicated on 2UH	SP=special specifications such as shapes and performance None=standard product
	17	50	80	100	120	—			
	20	50	80	100	120	160			
	25	50	80	100	120	160			
	32	50	80	100	120	160			
	40	50	80	100	120	160			
	45	50	80	100	120	160			
	50	—	80	100	120	160			
	58	—	80	100	120	160			
	65	—	80	100	120	160			

*The reduction ratio indicates the value for the following condition.Input: wave generator, fixed: circular spline, output: flexspline

CSF - 25 - 100 - 2A - GR - SP1 - SP2

Table 037-2

Model name	Model No.	Reduction ratio*						Model		Special specification
CSF	8	30	50	—	100	—	—	2A=component type 2UH=unit type	Precision class GR= High-precision HarmonicDrive® * Model number 8, 11, 14, and 17 are R. * Not indicated on 2UH	SP=special specifications such as shapes and performance None=standard product
	11	30	50	—	100	—	—			
	14	30	50	80	100	—	—			
	17	30	50	80	100	120	—			
	20	30	50	80	100	120	160			
	25	30	50	80	100	120	160			
	32	30	50	80	100	120	160			
	40	—	50	80	100	120	160			
	45	—	50	80	100	120	160			
	50	—	50	80	100	120	160			
	58	—	50	80	100	120	160			
	65	—	50	80	100	120	160			
	80	—	50	80	100	120	160			
	90	—	50	80	100	120	160			
	100	—	50	80	100	120	160			

*The reduction ratio indicates the value for the following condition.Input: wave generator, fixed: circular spline, output: flexspline

Technical Data

Rating table

CSG series

Table 038-1

Model	Reduction ratio	Rated torque at input 2000r/min		Permissible peak torque at start/stop		Permissible max. value of ave. load torque		Instantaneous permissible max. torque		Permissible max. input rotational speed (r/min)		Permissible ave. input rotational speed (r/min)		Inertia moment	
		N·m	kgf·m	N·m	kgf·m	N·m	kgf·m	N·m	kgf·m	Oil lubricant	Grease lubricant	Oil lubricant	Grease lubricant	I $\times10^{-4}$kg·m^2	J $\times10^{-5}$kgf·ms^2
14	50	7.0	0.7	23	2.3	9.0	0.9	46	4.7	14000	8500	6500	3500	0.033	0.034
	80	10	1.0	30	3.1	14	1.4	61	6.2						
	100	10	1.0	36	3.7	14	1.4	70	7.2						
17	50	21	2.1	44	4.5	34	3.4	91	9	10000	7300	6500	3500	0.079	0.081
	80	29	2.9	56	5.7	35	3.6	113	12						
	100	31	3.2	70	7.2	51	5.2	143	15						
	120	31	3.2	70	7.2	51	5.2	112	11						
20	50	33	3.3	73	7.4	44	4.5	127	13	10000	6500	6500	3500	0.193	0.197
	80	44	4.5	96	9.8	61	6.2	165	17						
	100	52	5.3	107	10.9	64	6.5	191	20						
	120	52	5.3	113	11.5	64	6.5	191	20						
	160	52	5.3	120	12.2	64	6.5	191	20						
25	50	51	5.2	127	13	72	7.3	242	25	7500	5600	5600	3500	0.413	0.421
	80	82	8.4	178	18	113	12	332	34						
	100	87	8.9	204	21	140	14	369	38						
	120	87	8.9	217	22	140	14	395	40						
	160	87	8.9	229	23	140	14	408	42						
32	50	99	10	281	29	140	14	497	51	7000	4800	4600	3500	1.69	1.72
	80	153	16	395	40	217	22	738	75						
	100	178	18	433	44	281	29	841	86						
	120	178	18	459	47	281	29	892	91						
	160	178	18	484	49	281	29	892	91						
40	50	178	18	523	53	255	26	892	91	5600	4000	3600	3000	4.50	4.59
	80	268	27	675	69	369	38	1270	130						
	100	345	35	738	75	484	49	1400	143						
	120	382	39	802	82	586	60	1530	156						
	160	382	39	841	86	586	60	1530	156						
45	50	229	23	650	66	345	35	1235	126	5000	3800	3300	3000	8.68	8.86
	80	407	41	918	94	507	52	1651	168						
	100	459	47	982	100	650	66	2041	208						
	120	523	53	1070	109	806	82	2288	233						
	160	523	53	1147	117	819	84	2483	253						
50	80	484	49	1223	125	675	69	2418	247	4500	3500	3000	2500	12.5	12.8
	100	611	62	1274	130	866	88	2678	273						
	120	688	70	1404	143	1057	108	2678	273						
	160	688	70	1534	156	1096	112	3185	325						
58	80	714	73	1924	196	1001	102	3185	325	4000	3000	2700	2200	27.3	27.9
	100	905	92	2067	211	1378	141	4134	422						
	120	969	99	2236	228	1547	158	4329	441						
	160	969	99	2392	244	1573	160	4459	455						
65	80	969	99	2743	280	1352	138	4836	493	3500	2800	2400	1900	46.8	47.8
	100	1236	126	2990	305	1976	202	6175	630						
	120	1236	126	3263	333	2041	208	6175	630						
	160	1236	126	3419	349	2041	208	6175	630						

(Note) 1. Oil lubrication is standard for component-type models whose model number is 50 or more with a reduction ratio of 50. Use grease lubrication within half the rated torque.
2. Inertia moment: $I=\frac{1}{4}GD^2$
3. See "Engineering data" on Page 012 for details of the terms.
4. When the maximum permissible momentary torque is expected to be applied, see "Bolt tightening of the flexspline" of each series.

CSF series

Table 038-2

Model	Reduction ratio	Rated torque at input 2000r/min		Permissible peak torque at start/stop		Permissible max. value of ave. load torque		Instantaneous permissible max. torque		Permissible max. input rotational speed (r/min)		Permissible ave. input rotational speed (r/min)		Inertia moment	
		N·m	kgf·m	N·m	kgf·m	N·m	kgf·m	N·m	kgf·m	Oil lubricant	Grease lubricant	Oil lubricant	Grease lubricant	I $\times10^{-4}$kg·m^2	J $\times10^{-5}$kgf·ms^2
8	30	0.9	0.09	1.8	0.18	1.4	0.14	3.3	0.34	14000	8500	6500	3500	0.003	0.0031
	50	1.8	0.18	3.3	0.34	2.3	0.24	6.6	0.67						
	100	2.4	0.25	4.8	0.49	3.3	0.34	9.0	0.92						
11	30	2.2	0.22	4.5	0.46	3.4	0.35	8.5	0.87	14000	8500	6500	3500	0.012	0.012
	50	3.5	0.36	8.3	0.85	5.5	0.56	17	1.7						
	100	5.0	0.51	11	1.1	8.9	0.91	25	2.6						
14	30	4.0	0.41	9.0	0.92	6.8	0.69	17	1.7	14000	8500	6500	3500	0.033	0.034
	50	5.4	0.55	18	1.8	6.9	0.70	35	3.6						
	80	7.8	0.80	23	2.4	11	1.1	47	4.8						
	100	7.8	0.80	28	2.9	11	1.1	54	5.5						

CSF series

Table 039-1

Model	Reduction ratio	Rated torque at input 2000r/min		Permissible peak torque at start/stop		Permissible max. value of ave. load torque		Instantaneous permissible max. torque		Permissible max. input rotational speed (r/min)		Permissible ave. input rotational speed (r/min)		Inertia moment	
		N·m	kgf·m	N·m	kgf·m	N·m	kgf·m	N·m	kgf·m	Oil lubricant	Grease lubricant	Oil lubricant	Grease lubricant	I $\times10^{-4}$kg·m^2	J $\times10^{-5}$kgf·ms^2
17	30	8.8	0.9	16	1.6	12	1.2	30	3.1	10000	7300	6500	3500	0.079	0.081
	50	16	1.6	34	3.5	26	2.6	70	7.1						
	80	22	2.2	43	4.4	27	2.7	87	8.9						
	100	24	2.4	54	5.5	39	4.0	108	11						
	120	24	2.4	54	5.5	39	4.0	86	8.8						
20	30	15	1.5	27	2.8	20	2.0	50	5.1	10000	6500	6500	3500	0.193	0.197
	50	25	2.5	56	5.7	34	3.5	98	10						
	80	34	3.5	74	7.5	47	4.8	127	13						
	100	40	4.1	82	8.4	49	5.0	147	15						
	120	40	4.1	87	8.9	49	5.0	147	15						
	160	40	4.1	92	9.4	49	5.0	147	15						
25	30	27	2.8	50	5.1	38	3.9	95	9.7	7500	5600	5600	3500	0.413	0.421
	50	39	4.0	98	10	55	5.6	186	19						
	80	63	6.4	137	14	87	8.9	255	26						
	100	67	6.8	157	16	108	11	284	29						
	120	67	6.8	167	17	108	11	304	31						
	160	67	6.8	176	18	108	11	314	32						
32	30	54	5.5	100	10	75	7.7	200	20	7000	4800	4600	3500	1.69	1.72
	50	76	7.8	216	22	108	11	382	39						
	80	118	12	304	31	167	17	568	58						
	100	137	14	333	34	216	22	647	66						
	120	137	14	353	36	216	22	686	70						
	160	137	14	372	38	216	22	686	70						
40	50	137	14	402	41	196	20	686	70	5600	4000	3600	3000	4.50	4.59
	80	206	21	519	53	284	29	980	100						
	100	265	27	568	58	372	38	1080	110						
	120	294	30	617	63	451	46	1180	120						
	160	294	30	647	66	451	46	1180	120						
45	50	176	18	500	51	265	27	950	97	5000	3800	3300	3000	8.68	8.86
	80	313	32	706	72	390	40	1270	130						
	100	353	36	755	77	500	51	1570	160						
	120	402	41	823	84	620	63	1760	180						
	160	402	41	882	90	630	64	1910	195						
50	50	245	25	715	73	350	36	1430	146	4500	3500	3000	2500	12.5	12.8
	80	372	38	941	96	519	53	1860	190						
	100	470	48	980	100	666	68	2060	210						
	120	529	54	1080	110	813	83	2060	210						
	160	529	54	1180	120	843	86	2450	250						
58	50	353	36	1020	104	520	53	1960	200	4000	3000	2700	2200	27.3	27.9
	80	549	56	1480	151	770	79	2450	250						
	100	696	71	1590	162	1060	108	3180	325						
	120	745	76	1720	176	1190	121	3330	340						
	160	745	76	1840	188	1210	123	3430	350						
65	50	490	50	1420	145	720	73	2830	289	3500	2800	2400	1900	46.8	47.8
	80	745	76	2110	215	1040	106	3720	380						
	100	951	97	2300	235	1520	155	4750	485						
	120	951	97	2510	256	1570	160	4750	485						
	160	951	97	2630	268	1570	160	4750	485						
80	50	872	89	2440	249	1260	129	4870	497	2900	2300	2200	1500	122	124
	80	1320	135	3430	350	1830	187	6590	672						
	100	1700	173	4220	431	2360	241	7910	807						
	120	1990	203	4590	468	3130	319	7910	807						
	160	1990	203	4910	501	3130	319	7910	807						
90	50	1180	120	3530	360	1720	176	6660	680	2700	2000	2100	1300	214	218
	80	1550	158	3990	407	2510	256	7250	740						
	100	2270	232	5680	580	3360	343	9020	920						
	120	2570	262	6160	629	4300	439	9800	1000						
	160	2700	276	6840	698	4300	439	11300	1150						
100	50	1580	161	4450	454	2280	233	8900	908	2500	1800	2000	1200	356	363
	80	2380	243	6060	618	3310	338	11600	1180						
	100	2940	300	7350	750	4630	472	14100	1440						
	120	3180	324	7960	812	5720	584	15300	1560						
	160	3550	362	9180	937	5720	584	15500	1580						

(Note) 1. Oil lubrication is standard for component-type models whose model number is 50 or more with a reduction ratio of 50. Use grease lubrication within half the rated torque.
2. Inertia moment: $I=\frac{1}{4}GD^2$
3. See "Engineering data" on Page 012 for details of the terms.
4. When the maximum permissible momentary torque is expected to be applied, see "Bolt tightening of the flexspline" of each series.

Outline drawing

You can download the CAD data (DXF) of this product from the following homepage.
URL: https://www.hds.co.jp/

Fig. 040-1

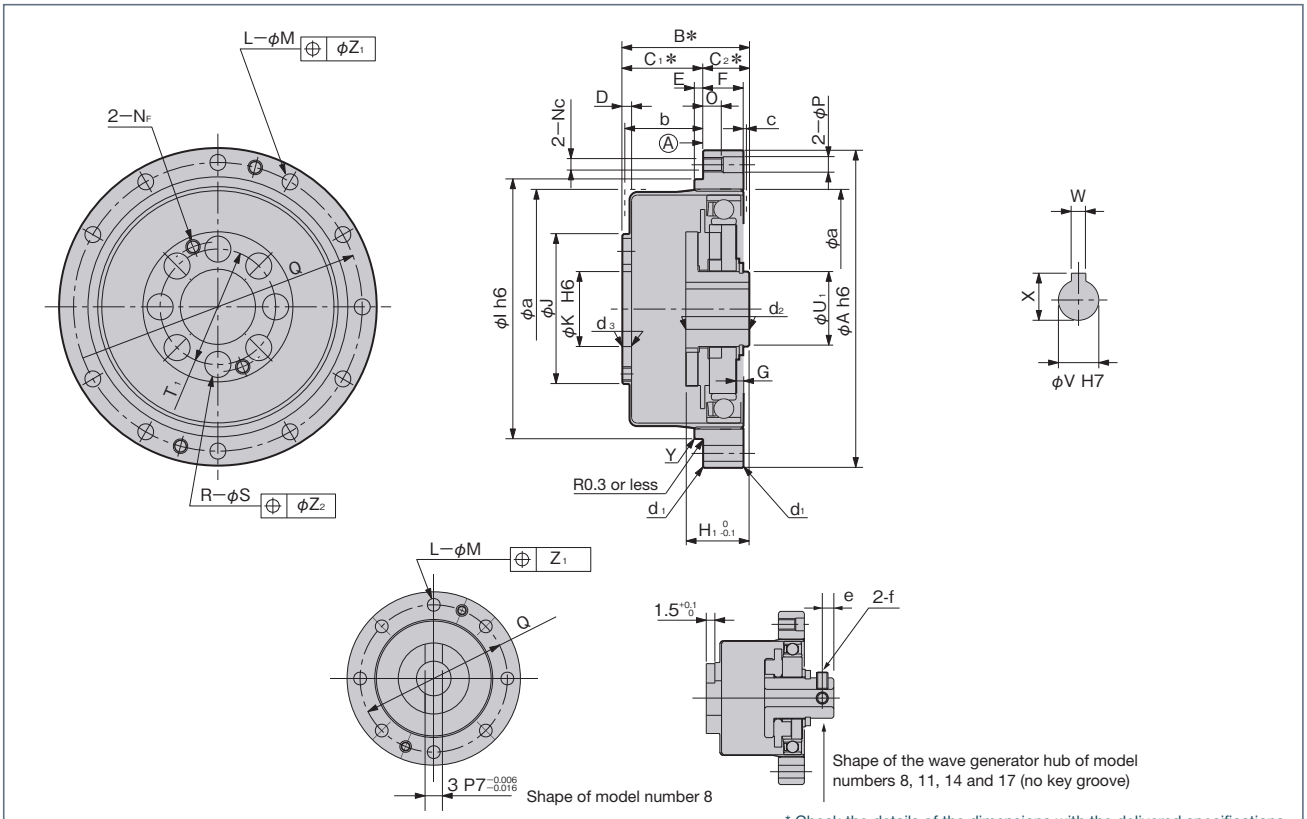

* Check the details of the dimensions with the delivered specifications.
* The allowance varies depending on the part manufacturing method (cast or machined products). Contact us if the allowance is not described in the dimensions and is required.

■Simultaneous installation of bolts and pins of the flexspline (option)

We recommend that you use additional pins together with tightening bolts of the flexspline when the maximum permissible momentary torque shown in the ratings is expected to be applied. The pinhole should be a reamed hole, and the diameter and position are shown in Figure 040-2.
The number of pinholes of the CSF series is different from that of the CSG series. See Page 056 for details of the CSG series.

Fig. 040-2

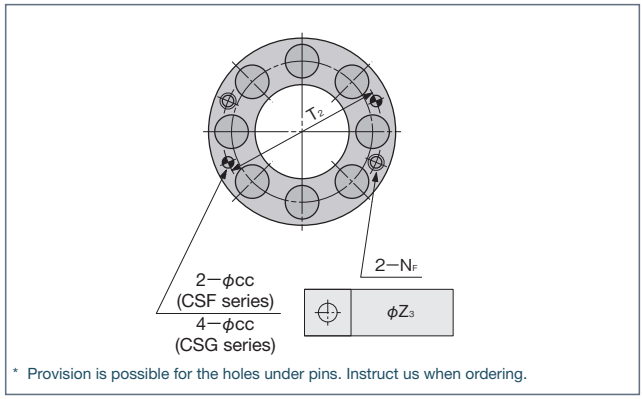

* Provision is possible for the holes under pins. Instruct us when ordering.

Fig. 040-3

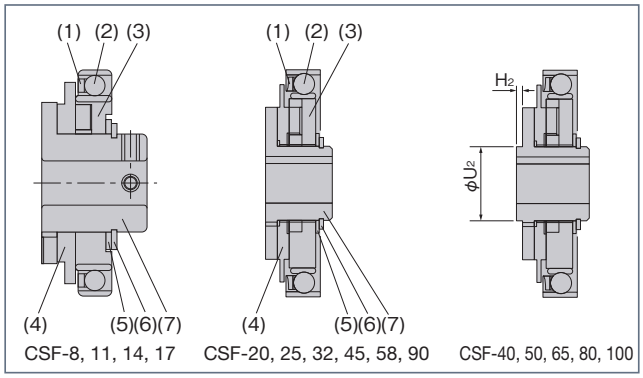

■Shape of the wave generator

The wave generator is Oldham's coupling structure.

(1) Retainer
(2) Wave generator bearing
(3) Wave generator plug
(4) Insert
(5) Rub washer (unclear)
(6) C-type retaining ring
(7) Wave generator hub

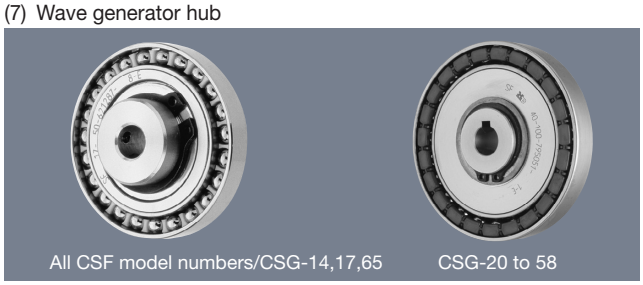

All CSF model numbers/CSG-14,17,65 CSG-20 to 58

Measurement table

Table 041-1
Unit : mm

Symbol \ Model		8	11	14	17	20	25	32	40	45	50	58	65	80	90	100
φA h6		30	40	50	60	70	85	110	135	155	170	195	215	265	300	330
B*	CSG Series	—	—	$28.5^{0}_{-0.4}$	$32.5^{0}_{-0.4}$	$33.5^{0}_{-0.4}$	$37^{0}_{-0.5}$	$44^{0}_{-0.6}$	$53^{0}_{-0.6}$	$58.5^{0}_{-0.6}$	$64^{0}_{-0.6}$	$75.5^{0}_{-0.6}$	$83^{0}_{-0.6}$	—	—	—
	CSF Series	$22.1^{0}_{-0.3}$	$25.8^{0}_{-0.7}$	$28.5^{0}_{-0.8}$	$32.5^{0}_{-0.9}$	$33.5^{0}_{-1.0}$	$37^{0}_{-1.0}$	$44^{0}_{-1.1}$	$53^{0}_{-1.1}$	$58.5^{0}_{-1.2}$	$64^{0}_{-1.3}$	$75.5^{0}_{-1.3}$	$83^{0}_{-1.3}$	$101^{0}_{-1.3}$	$112.5^{0}_{-1.4}$	$125^{0}_{-1.6}$
C_1*		$12.5^{+0.2}_{0}$	$14.5^{+0.4}_{0}$	$17.5^{+0.4}_{0}$	$20^{+0.5}_{0}$	$21.5^{+0.6}_{0}$	$24^{+0.6}_{0}$	$28^{+0.6}_{0}$	$34^{+0.6}_{0}$	$38^{+0.6}_{0}$	$41^{+0.6}_{0}$	$48^{+0.6}_{0}$	$52.5^{+0.6}_{0}$	$64^{+0.6}_{0}$	$71.5^{+0.8}_{0}$	$79^{+1.0}_{0}$
C_2*		9.6	11.3	11	12.5	12	13	16	19	20.5	23	27.5	30.5	37	41	46
D		2.7	2	2.4	3	3	3	3.2	4	4.5	5	5.8	6.5	8	9	10
E		—	2	2	2.5	3	3	3	4	4	4	5	5	6	6	6
F		4.5	5	6	6.5	7.5	10	14	17	19	22	25	29	36	41	46
G	CSG Series	—	—	1.4	1.6	1.5	3.5	4.2	5.6	6.3	7	8.2	9.5	—	—	—
	CSF Series	—	—	0.4	0.3	0.1	2.1	2.5	3.3	3.7	4.2	4.8	5.8	6.6	7.5	8.3
$H_1{}^{0}_{-0.1}$	CSG Series	—	—	18.5	20.7	21.5	21.6	23.6	29.7	30.5	34.8	38.3	44.6	—	—	—
	CSF Series	12	16	17.6	19.5	20.1	20.2	22	27.5	27.9	32	34.9	40.9	49.1	48.2	56.7
H_2		—	—	—	—	—	—	—	0.4	—	0.8	—	2.2	3.1	—	4.5
φI h6	Other than R.R. of 30	—	31	38	48	54	67	90	110	124	135	156	177	218	245	272
	Reduction ratio of 30	—	31	38	48	55	68	90	—	—	—	—	—	—	—	—
φJ		12.3	17.8	23	27.2	32	40	52	64	72	80	92.8	104	128	144	160
φK H6		6	6	11	10	16	20	26	32	36	40	46	52	65	72	80
L	CSG Series	—	—	8	16	16	16	16	16	16	16	16	16	—	—	—
	CSF Series	8	8	6	12	12	12	12	12	12	12	12	12	16	16	16
φM		2.2	2.9	3.5	3.4	3.5	4.5	5.5	6.6	9	9	11	11	11	14	14
N_C		M2	M2.5	M3	M3	M3	M4	M5	M6	M8	M8	M10	M10	M10	M12	M12
N_F		—	—	M3	M3	M3	M4	M5	M6	M6	M8	M8	M8	M8	M12	M10
O		3	3	6	6.5	4	6	7	9	12	13	15	15	15	18	20
φP		2.2	2.9	—	—	3.5	4.5	5.5	6.6	9	9	11	11	11	14	14
Q (PCD)		25.5	35	44	54	62	75	100	120	140	150	175	195	240	270	300
R		—	6	6	6	8	8	8	8	8	8	8	8	10	8	12
φS		—	3.4	4.5	5.5	5.5	6.6	9	11	13.5	15.5	15.5	18	18	22	22
T_1 (PCD)		—	12	17	19	24	30	40	50	54	60	70	80	100	110	130
T_2 (PCD)		—	15.2	18.5	21.5	27	34	45	56	61	68	79	90	114	120	142
$φU_1$		7	11	14	18	21	26	26	32	32	32	40	48	55	60	65
$φU_2$		—	—	—	—	—	—	—	32	—	32	—	48	55	—	65
φV	Standard (H7)	3	5	6	8	9	11	14	14	19	19	22	24	28	28	28
	Max. size	—	—	8	10	13	15	16	20	20	20	25	30	35	37	40
WJs9		—	—	—	—	3	4	5	5	6	6	6	8	8	8	8
X		—	—	—	—	$10.4^{+0.1}_{0}$	$12.8^{+0.1}_{0}$	$16.3^{+0.1}_{0}$	$16.3^{+0.1}_{0}$	$21.8^{+0.1}_{0}$	$21.8^{+0.1}_{0}$	$24.8^{+0.1}_{0}$	$27.3^{+0.2}_{0}$	$31.3^{+0.2}_{0}$	$31.3^{+0.2}_{0}$	$31.3^{+0.2}_{0}$
Y		—	C0.2	C0.3	C0.4	C0.4	C0.4	C0.4	C0.4	C0.4	C0.8	C0.8	C0.8	C0.8	C0.8	C0.8
$φZ_1$		0.1	0.2	0.25	0.20	0.25	0.25	0.25	0.3	0.5	0.5	0.5	0.5	0.5	1.0	1.0
$φZ_2$		—	0.2	0.25	0.25	0.25	0.3	0.5	0.5	0.75	0.75	0.75	1.0	1.0	1.0	1.0
$φZ_3$		—	0.02	0.02	0.02	0.02	0.02	0.02	0.02	0.02	0.02	0.02	0.02	0.02	0.02	0.02
φa	Inner wall of the case	21.5	30	38	45	53	66	86	106	119	133	154	172	212	239	265
b		11.34	14	17.1	19	20.5	23	26.8	33	36.5	39	46.2	50	61	68.5	76
c		0.5	0.5	1	1	1.5	1.5	1.5	2	2	2	2.5	2.5	3	3	3
φccH7	CSG Series	—	—	3	3	3	4	5	6	6	8	8	8	—	—	—
	CSF Series	—	2	3	3	3	4	5	6	6	8	8	8	8	12	10
d_1		C0.3	C0.4	C0.4	C0.4	C0.4	C0.4	C0.4	C0.4	C0.4	C0.4	C0.4	C0.4	C0.4	C0.4	C0.4
d_2		C0.3	C0.3	C0.4	C0.5	C0.4	C0.4	C0.4	C0.4	C0.4	C0.4	C0.4	C0.4	C0.4	C0.4	C0.4
d_3		C0.3	C0.3	C0.5	C0.5	C0.5	C0.5	C0.5	C0.5	C0.5	C0.5	C0.5	C0.5	C0.5	C0.5	C0.5
e		2	3	2.5	3	—	—	—	—	—	—	—	—	—	—	—
f		M2×3	M3×4	M3×4	M3×6	—	—	—	—	—	—	—	—	—	—	—
Mass (kg)		0.026	0.05	0.09	0.15	0.28	0.42	0.89	1.7	2.3	3.2	4.7	6.7	12.4	17.6	23.5

- The clamp face of the circular spline is Face (A) in the drawing. Fit this face to install it on the case.
- You can change and add the following sizes.

Wave Generator:	V size
Flexspline:	R and S size
Circular Spline:	L and M size

- The B, C_1 and C_2 sizes indicated by an asterisk are the mounting positions in the shaft direction and allowance of the three parts (wave generator, flexspline, circular spline) comprising HarmonicDrive®. Strictly observe these sizes as they affect the performance and intensity.
- As the flexspline is subject to elastic deformation, the inner wall should be φa, b, c or more to prevent possible contact with the case.

Angle transmission accuracy

See "Engineering data" for a description of terms.

Table 042-1

Reduction ratio	Specification \ Model		8	11	14	17	20	25	32	40 to 100
30	Standard product	$\times10^{-4}$rad	5.8	5.8	5.8	4.4	4.4	4.4	4.4	—
		arc-min	2	2	2	1.5	1.5	1.5	1.5	—
	Special product	$\times10^{-4}$rad	—	—	—	—	2.9	2.9	2.9	—
		arc-min	—	—	—	—	1	1	1	—
50 or more	Standard product	$\times10^{-4}$rad	5.8	5.8	4.4	4.4	2.9	2.9	2.9	2.9
		arc-min	2	2	1.5	1.5	1	1	1	1
	Special product	$\times10^{-4}$rad	—	—	2.9	2.9	1.5	1.5	1.5	1.5
		arc-min	—	—	1	1	0.5	0.5	0.5	0.5

*Reduction ratio 100 of model 11 is at angle transmission accuracy 4.4×10^{-4} rad/1.5arc-min.

Hysteresis loss

See "Engineering data" for a description of terms.

Table 042-2

Reduction ratio	Model	8	11	14	17	20	25	32	40 or more
30	$\times10^{-4}$rad	8.7	8.7	8.7	8.7	8.7	8.7	8.7	—
	arc-min	3.0	3.0	3.0	3.0	3.0	3.0	3.0	—
50	$\times10^{-4}$rad	8.7	5.8	5.8	5.8	5.8	5.8	5.8	5.8
	arc-min	3.0	2.0	2.0	2.0	2.0	2.0	2.0	2.0
80 or more	$\times10^{-4}$rad	5.8	5.8	2.9	2.9	2.9	2.9	2.9	2.9
	arc-min	2.0	2.0	1.0	1.0	1.0	1.0	1.0	1.0

Max. backlash quantity

See "Engineering data" for a description of terms.

Table 042-3

Reduction ratio \ Model		8	11	14	17	20	25	32	40	45	50	58	65	80	90	100
30	$\times10^{-5}$rad	28.6	23.8	29.1	16.0	13.6	13.6	11.2	—	—	—	—	—	—	—	—
	arc-sec	59	49	60	33	28	28	23	—	—	—	—	—	—	—	—
50	$\times10^{-5}$rad	17.0	14.1	17.5	9.7	8.2	8.2	6.8	6.8	5.8	5.8	4.8	4.8	4.8	3.9	2.9
	arc-sec	35	24	36	20	17	17	14	14	12	12	10	10	10	8	6
80	$\times10^{-5}$rad	—	—	11.2	6.3	5.3	5.3	4.4	4.4	3.9	3.9	2.9	2.9	2.9	2.4	2.4
	arc-sec	—	—	23	13	11	11	9	9	8	8	6	6	6	5	5
100	$\times10^{-5}$rad	8.7	7.3	8.7	4.8	4.4	4.4	3.4	3.4	2.9	2.9	2.4	2.4	2.4	1.9	1.5
	arc-sec	18	15	18	10	9	9	7	7	6	6	5	5	5	4	3
120	$\times10^{-5}$rad	—	—	—	3.9	3.9	3.9	2.9	2.9	2.4	2.4	1.9	1.9	1.9	1.5	1.5
	arc-sec	—	—	—	8	8	8	6	6	5	5	4	4	4	3	3
160	$\times10^{-5}$rad	—	—	—	—	2.9	2.9	2.4	2.4	1.9	1.9	1.5	1.5	1.5	1.0	1.0
	arc-sec	—	—	—	—	6	6	5	5	4	4	3	3	3	2	2

Rigidity (Spring constant)

See "Engineering data" for a description of terms.

Table 042-4

Symbol \ Model			8	11	14	17	20	25	32	40	45	50	58	65	80	90	100
	T_1	N·m	0.29	0.80	2.0	3.9	7.0	14	29	54	76	108	168	235	430	618	843
		kgf·m	0.03	0.082	0.20	0.40	0.70	1.4	3.0	5.5	7.8	11	17	24	44	63	86
	T_2	N·m	0.75	2.0	6.9	12	25	48	108	196	275	382	598	843	1570	2260	3040
		kgf·m	0.077	0.20	0.7	1.2	2.5	4.9	11	20	28	39	61	86	160	230	310
Reduction ratio 30	K_1	$\times10^4$N·m/rad	0.034	0.084	0.19	0.34	0.57	1.0	2.4	—	—	—	—	—	—	—	—
		kgf·m/arc-min	0.010	0.025	0.056	0.10	0.17	0.30	0.70	—	—	—	—	—	—	—	—
	K_2	$\times10^4$N·m/rad	0.044	0.13	0.24	0.44	0.71	1.3	3.0	—	—	—	—	—	—	—	—
		kgf·m/arc-min	0.013	0.037	0.07	0.13	0.21	0.40	0.89	—	—	—	—	—	—	—	—
	K_3	$\times10^4$N·m/rad	0.054	0.16	0.34	0.67	1.1	2.1	4.9	—	—	—	—	—	—	—	—
		kgf·m/arc-min	0.016	0.047	0.10	0.20	0.32	0.62	1.5	—	—	—	—	—	—	—	—
	θ_1	$\times10^{-4}$rad	8.5	9.5	10.5	11.5	12.3	14	12.1	—	—	—	—	—	—	—	—
		arc-min	3.0	3.3	3.6	4.0	4.1	4.7	4.3	—	—	—	—	—	—	—	—
	θ_2	$\times10^{-4}$rad	19	19	31	30	38	40	38	—	—	—	—	—	—	—	—
		arc-min	6.6	6.5	10.7	10.2	12.7	13.4	13.3	—	—	—	—	—	—	—	—
Reduction ratio 50	K_1	$\times10^4$N·m/rad	0.044	0.22	0.34	0.81	1.3	2.5	5.4	10	15	20	31	44	81	118	162
		kgf·m/arc-min	0.013	0.066	0.1	0.24	0.38	0.74	1.6	3.0	4.3	5.9	9.3	13	24	35	48
	K_2	$\times10^4$N·m/rad	0.067	0.30	0.47	1.1	1.8	3.4	7.8	14	20	28	44	61	115	162	222
		kgf·m/arc-min	0.020	0.090	0.14	0.32	0.52	1.0	2.3	4.2	6.0	8.2	13	18	34	48	66
	K_3	$\times10^4$N·m/rad	0.084	0.32	0.57	1.3	2.3	4.4	9.8	18	26	34	54	78	145	206	283
		kgf·m/arc-min	0.025	0.096	0.17	0.4	0.67	1.3	2.9	5.3	7.6	10	16	23	43	61	84
	θ_1	$\times10^{-4}$rad	6.6	3.6	5.8	4.9	5.2	5.5	5.5	5.2	5.2	5.5	5.2	5.2	5.2	5.2	5.2
		arc-min	2.3	1.2	2.0	1.7	1.8	1.9	1.9	1.8	1.8	1.9	1.8	1.8	1.8	1.8	1.8
	θ_2	$\times10^{-4}$rad	13	8	16	12	15.4	15.7	15.7	15.4	15.1	15.4	15.1	15.1	15.1	15.4	15.1
		arc-min	4.7	2.6	5.6	4.2	5.3	5.4	5.4	5.3	5.2	5.3	5.2	5.2	5.2	5.2	5.2

* The values in this table are reference values. The lower-limit value is approximately 80% of the displayed value.

Table 043-1

Symbol \ Model			8	11	14	17	20	25	32	40	45	50	58	65	80	90	100
	T_1	N·m	0.29	0.80	2.0	3.9	7.0	14	29	54	76	108	168	235	430	618	843
		kgf·m	0.03	0.082	0.2	0.4	0.7	1.4	3.0	5.5	7.8	11	17	24	44	63	86
	T_2	N·m	0.75	2.0	6.9	12	25	48	108	196	275	382	598	843	1570	2260	3040
		kgf·m	0.077	0.2	0.7	1.2	2.5	4.9	11	20	28	39	61	86	160	230	310
Reduction ratio 80 or more	K_1	$\times10^4$N·m/rad	0.091	0.27	0.47	1	1.6	3.1	6.7	13	18	25	40	54	100	145	200
		kgf·m/arc-min	0.027	0.080	0.14	0.3	0.47	0.92	2.0	3.8	5.4	7.4	12	16	30	43	59
	K_2	$\times10^4$N·m/rad	0.10	0.34	0.61	1.4	2.5	5.0	11	20	29	40	61	88	162	230	310
		kgf·m/arc-min	0.031	0.10	0.18	0.4	0.75	1.5	3.2	6.0	8.5	12	18	26	48	68	93
	K_3	$\times10^4$N·m/rad	0.12	0.44	0.71	1.6	2.9	5.7	12	23	33	44	71	98	185	263	370
		kgf·m/arc-min	0.036	0.13	0.21	0.46	0.85	1.7	3.7	6.8	9.7	13	21	29	55	78	110
	θ_1	$\times10^{-4}$rad	3.2	3.0	4.1	3.9	4.4	4.4	4.4	4.1	4.1	4.4	4.1	4.4	4.4	4.4	4.4
		arc-min	1.1	1.0	1.4	1.3	1.5	1.5	1.5	1.4	1.4	1.5	1.4	1.5	1.5	1.5	1.5
	θ_2	$\times10^{-4}$rad	8	6	12	9.7	11.3	11.1	11.6	11.1	11.1	11.1	11.1	11.3	11.3	11.6	11.3
		arc-min	2.6	2.2	4.2	3.3	3.9	3.8	4.0	3.8	3.8	3.8	3.8	3.9	3.9	4.0	3.9

* The values in this table are reference values. The lower-limit value is approximately 80% of the displayed value.

Starting torque

See "Engineering data" for a description of terms. As the values in the table below vary depending on the use conditions, use them as reference values.

CSG Series

Table 043-2
Unit: cN·m

Reduction ratio \ Model	14	17	20	25	32	40	45	50	58	65
30	—	—	—	—	—	—	—	—	—	—
50	3.6	5.6	7.3	13	29	51	69	—	—	—
80	2.6	3.6	4.5	8.5	18	32	45	59	90	121
100	2.3	3.2	4.1	7.6	17	29	40	53	80	108
120	—	3.0	3.6	6.9	14	26	36	50	74	101
160	—	—	3.2	6.1	13	23	32	43	64	88

CSF Series

Table 043-3
Unit: cN·m

Reduction ratio \ Model	8	11	14	17	20	25	32	40	45	50	58	65	80	90	100
30	1.3	2.7	4.3	6.5	11	19	45	—	—	—	—	—	—	—	—
50	0.8	1.6	3.3	5.1	6.6	12	26	46	63	86	130	180	320	450	590
80	—	—	2.4	3.3	4.1	7.7	16	29	41	54	82	110	200	280	380
100	0.59	1.1	2.1	2.9	3.7	6.9	15	26	36	48	73	98	180	250	340
120	—	—	—	2.7	3.3	6.3	13	24	33	45	67	92	170	230	310
160	—	—	—	—	2.9	5.5	12	21	29	39	58	80	140	200	270

Overdrive starting torque

See "Engineering data" for a description of terms. As the values in the table below vary depending on the use conditions, use them as reference values.

CSG Series

Table 043-4
Unit: N·m

Reduction ratio \ Model	14	17	20	25	32	40	45	50	58	65
30	—	—	—	—	—	—	—	—	—	—
50	1.5	2.8	4.4	8.3	18	31	41	—	—	—
80	1.5	2.8	4.6	8.5	18	31	43	58	89	132
100	1.9	3.1	5.0	9.2	20	34	46	63	97	143
120	—	3.4	5.4	10	21	37	52	69	107	154
160	—	—	6.4	12	25	44	63	85	132	187

CSF Series

Table 043-5
Unit: N·m

Reduction ratio \ Model	8	11	14	17	20	25	32	40	45	50	58	65	80	90	100
30	0.65	1.3	2	3.2	5.5	10	21	—	—	—	—	—	—	—	—
50	0.5	1	1.4	2.5	4	7.5	16	28	37	52	80	110	200	270	360
80	—	—	1.4	2.5	4.2	7.7	16	28	39	53	81	120	200	270	370
100	0.7	1.4	1.7	2.8	4.5	8.4	18	31	42	57	88	130	220	300	400
120	—	—	—	3.1	4.9	9.2	19	34	47	63	97	140	240	330	440
160	—	—	—	—	5.8	11	23	40	57	77	120	170	290	390	540

Ratcheting torque

See "Engineering data" for a description of terms.

■CSG Series

Table 044-1
Unit: N·m

Reduction ratio \ Model	14	17	20	25	32	40	45	50	58	65
50	110	190	280	580	1200	2300	3500	—	—	—
80	140	260	450	880	1800	3600	5000	7000	10000	14000
100	100	200	330	650	1300	2700	4000	5300	8300	12000
120	—	150	310	610	1200	2400	3600	4900	7500	10000
160	—	—	280	580	1200	2300	3300	4600	7200	10000

■CSF Series

Table 044-2
Unit: N·m

Reduction ratio \ Model	8	11	14	17	20	25	32	40	45	50	58	65	80	90	100
30	11	29	59	100	170	340	720	—	—	—	—	—	—	—	—
50	12	34	88	150	220	450	980	1800	2700	3700	5800	7800	14000	20000	29000
80	—	—	110	200	350	680	1400	2800	3900	5400	8200	11000	22000	30000	44000
100	14	43	84	160	260	500	1000	2100	3100	4100	6400	9400	16000	23000	33000
120	—	—	—	120	240	470	980	1900	2800	3800	5800	8300	15000	21000	30000
160	—	—	—	—	220	450	980	1800	2600	3600	5600	8000	14000	20000	28000

Buckling torque

See "Engineering data" for a description of terms.

■CSG Series

Table 044-3
Unit: N·m

Model	14	17	20	25	32	40	45	50	58	65
All Ratios	260	500	800	1700	3500	6700	8900	12200	19000	26600

■CSF Series

Table 044-4
Unit: N·m

Model	8	11	14	17	20	25	32	40	45	50	58	65	80	90	100
All Ratios	35	90	190	330	560	1000	2200	4300	5800	8000	12000	17000	31000	45000	58000

On no-load running torque

No-load running torque means the torque on the input side (high-speed shaft side) required to put HarmonicDrive® under a no-load condition.

* Contact us for detailed values.

Measuring condition

Table 044-5

Reduction ratio 100			
Lubrication condition	Grease lubrication	Name	Harmonic grease® SK-1A
			Harmonic grease® SK-2
		Application qty.	Appropriate application qty. (See page 049)
The torque value is the value after a trial run for two hours or longer at an input of 2000 r/min.			

* Contact us for oil lubrication.

■Correction quantity by reduction

The no-load running torque of HarmonicDrive® varies depending on the reduction ratio. Graphs 045-1 to 045-4 show the values for a reduction ratio of 100. Obtain other reduction ratios by adding the correction quantity shown in the right-hand table (Table 044-6).

Correction quantity for the no-load running torque of the component type

Table 044-6
Unit: Ncm

Reduction ratio \ Model	30	50	80	120	160
8	0.4	0.2	—	—	—
11	0.7	0.3	—	—	—
14	1.1	0.5	0.1	—	—
17	1.8	0.8	0.1	-0.1	—
20	2.7	1.2	0.2	-0.1	-0.3
25	5.0	2.2	0.3	-0.2	-0.6
32	10	4.5	0.7	-0.5	-1.2
40	—	8.0	1.2	-0.9	-2.2
45	—	11	1.7	-1.3	-3.0
50	—	15	2.3	-1.7	-4.0
58	—	22	3.4	-2.5	-6.1
65	—	31	4.7	-3.5	-8.4
80	—	55	8.5	-6.2	-15
90	—	77	12	-8.7	-21
100	—	100	16	-12	-28

■No-load running torque for a reduction ratio of 100

Input rotational speed: 500r/min

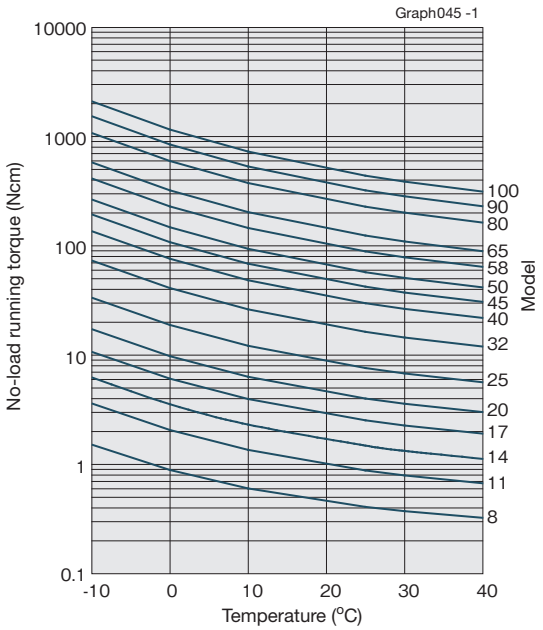

Input rotational speed: 1000r/min

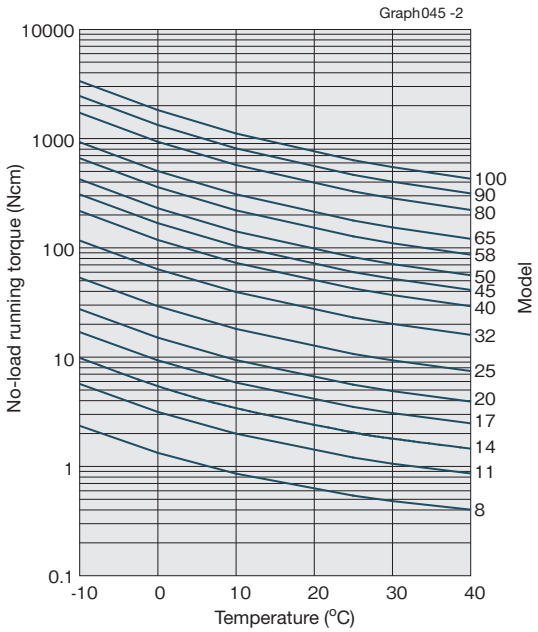

Input rotational speed: 2000r/min

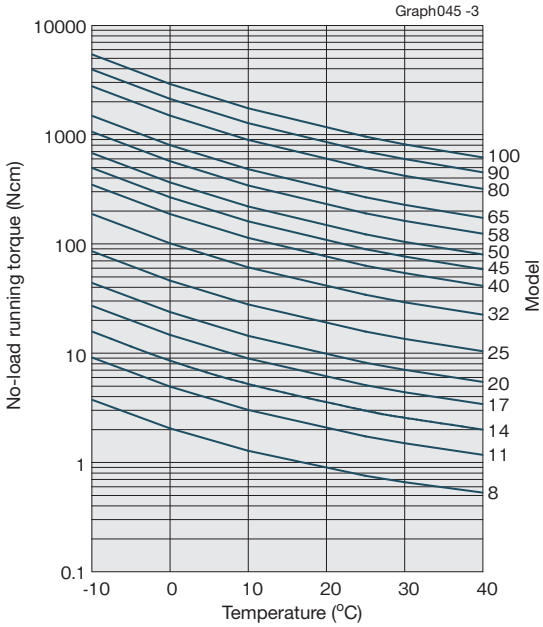

Input rotational speed: 3500r/min

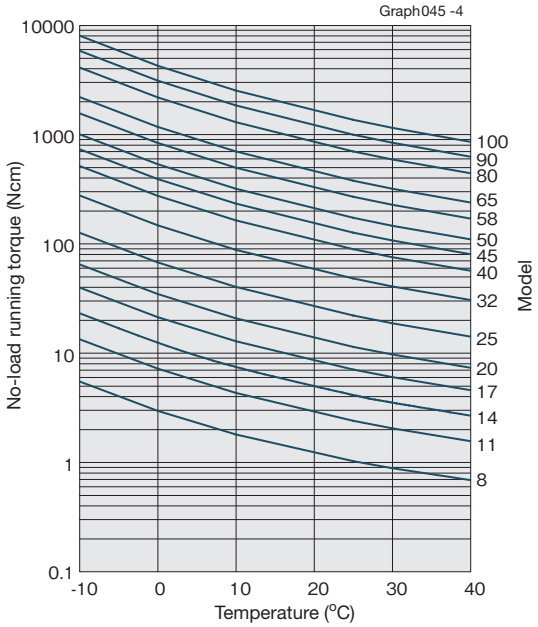

*The values in this graph are average values ($\overline{X}$). $\sigma \fallingdotseq \overline{X} \times 0.2$

Efficiency characteristics

The efficiency varies depending on the following conditions.

- Reduction ratio
- Input rotational speed
- Load torque
- Temperature
- Lubrication condition (Type of lubricant and the quantity)

Measuring condition

Table 046-1

Built-in	Measurement by building the recommended built-in precision into the product		
Load torque	The rated torque shown in the ratings (see the page 038 and 039)		
Lubricating condition	Grease lubrication	Name	Harmonic grease® SK-1A
			Harmonic grease® SK-2
		Application qty.	Appropriate application qty. (see the page 049)

* Contact us for oil lubrication.

■Efficiency correction coefficient

If the load torque is smaller than the rated torque, the efficiency value lowers. Obtain correction coefficient Ke from the efficiency correction coefficient of Graph 046-1 to obtain the efficiency using the following example of calculation.

Example of calculation

Efficiency η (%) under the following condition is obtained from the example of CSF-20-80-2A-GR.
Input rotational speed: 1000 r/min
Load torque: 19.6 N·m
Lubrication method: Grease lubrication (Harmonic grease® SK-1A)
Lubricant temperature: 20°C
Since the rated torque of model number 20 with a reduction ratio of 80 is 34 N·m (Ratings: Page 039), the torque ratio α is 0.58. (α=19.6/34=0.58)

- The efficiency correction coefficient is Ke=0.93 from Graph 046-1.
- Efficiency η at load torque 19.6 N·m: η=Ke·η_R=0.93 x 78=73%

Efficiency correction coefficient

Graph 046-1

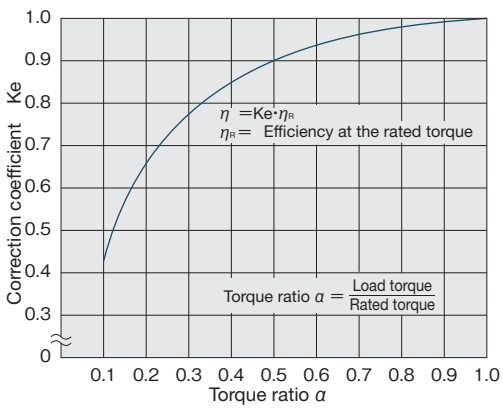

* Efficiency correction coefficient Ke=1 holds when the load torque is greater than the rated torque.

■Efficiency at rated torque

Model number: 8, 11, 14

Reduction ratio 30

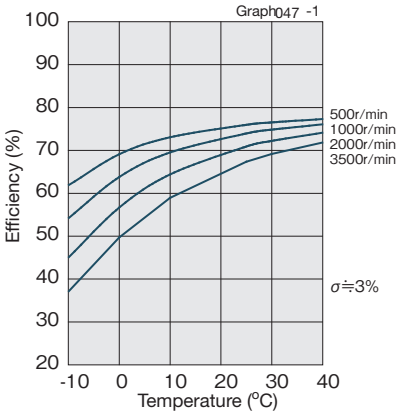

Reduction ratio 50, 80

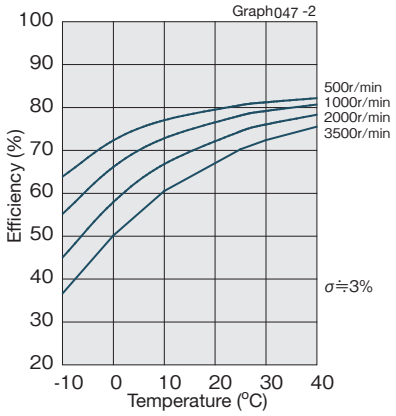

Reduction ratio 100

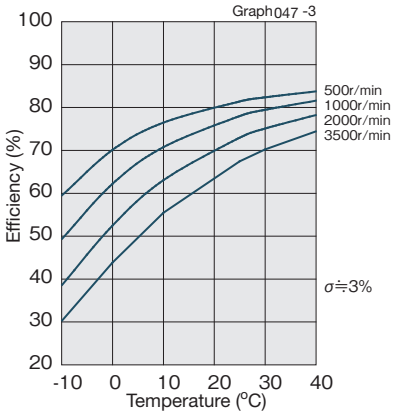

Model number: 17 to 100

Reduction ratio 30

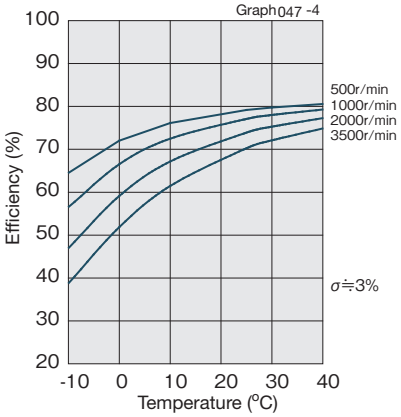

Reduction ratio 50

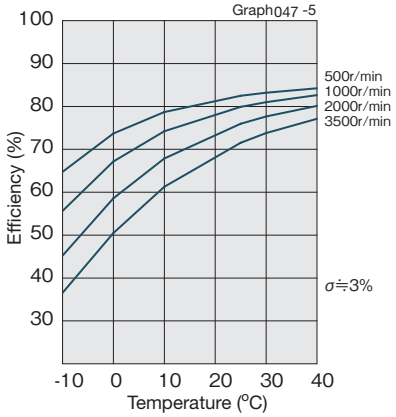

Reduction ratio 80, 100

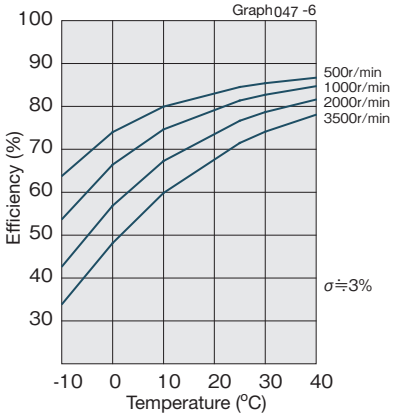

Reduction ratio 120

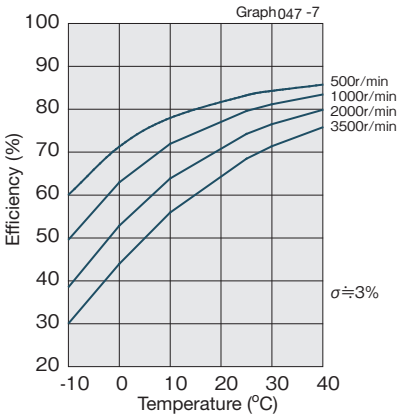

Reduction ratio 160

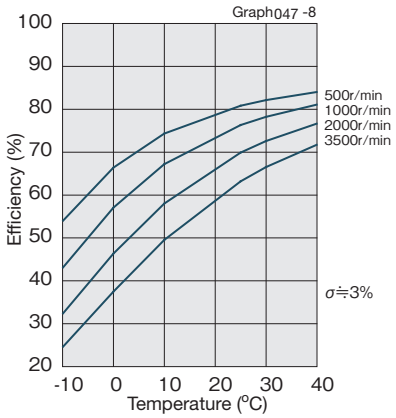

Design guide

Lubrication

■Grease lubrication

See “Engineering data” on Page 016 for details of the lubricant.

Recommended size for the inner wall of the case

Use the recommended size for the inner wall of the case of HarmonicDrive® so that grease does not fly away and remains inside HarmonicDrive® during operation. Contact us if you cannot secure the recommended size.

Recommended size for the inner wall of the case

Fig. 048-1

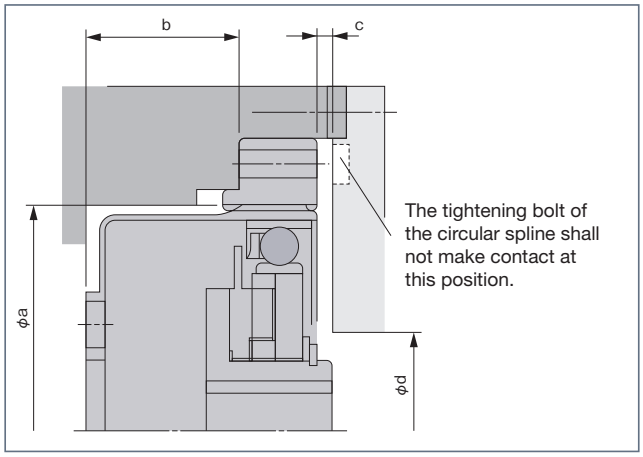

Recommended size for the inner wall of the case

Table 048-1
Unit: mm

Symbol \ Model	8	11	14	17	20	25	32	40	45	50	58	65	80	90	100
φa	21.5	30	38	45	53	66	86	106	119	133	154	172	212	239	265
b	11.34	14	17.1	19	20.5	23	26.8	33	36.5	39	46.2	50	61	68.5	76
c	0.5	0.5	1	1	1.5	1.5	1.5	2	2	2	2.5	2.5	3	3	3
φd	13	16	16	26	30	37	37	45	45	45	56	62	67	73	79

(Note) Double Size C if you use the wave generator facing upward.

Application guide

Application guide

Fig. 048-2

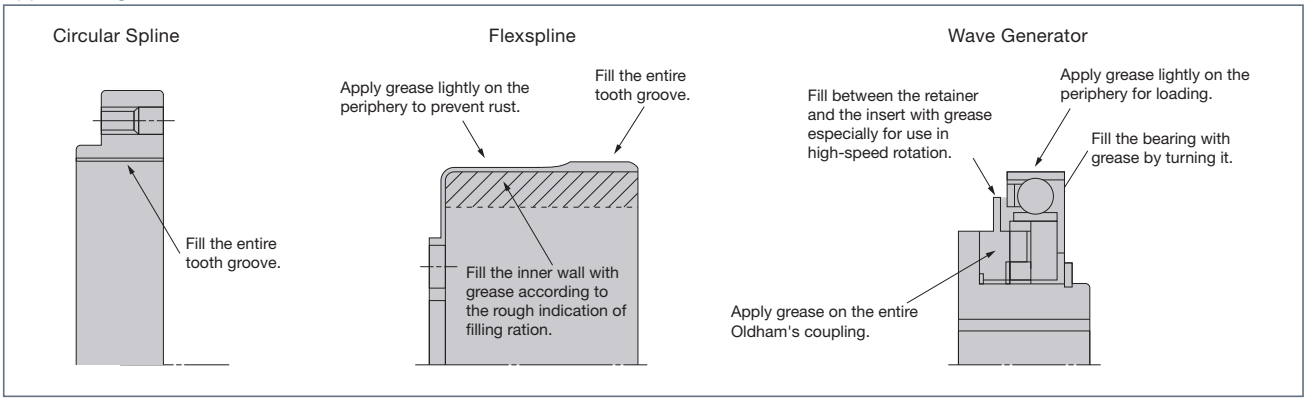

Application guide by usage

Fig. 048-3

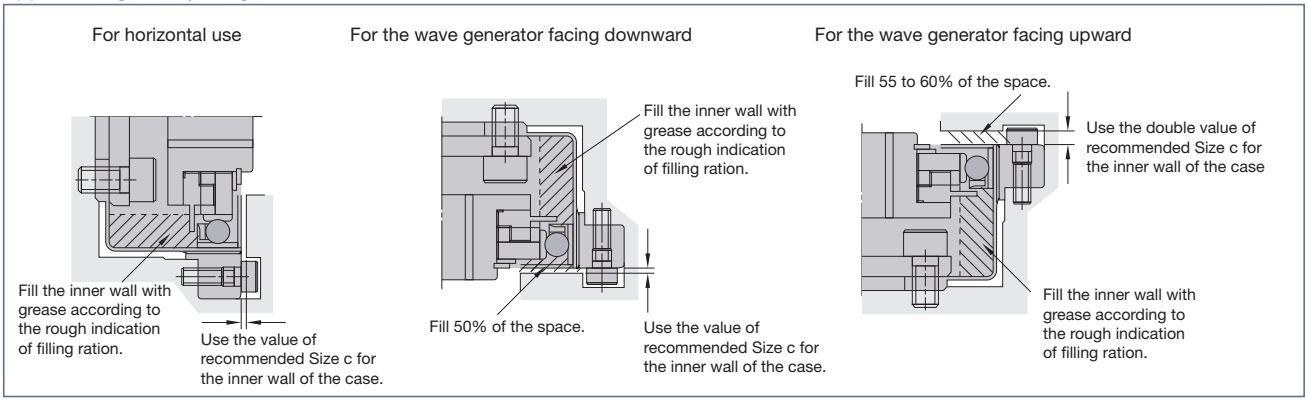

Application quantity

Table 049-1
Unit: g

Usage \ Model		8	11	14	17	20	25	32	40	45	50	58	65	80	90	100
Horizontal use		1.2	2.9	5.5	10	16	30	60	110	170	220	360	460	850	1150	1500
Vertical use	Output shaft facing upward	1.4	3.5	7	12	18	35	70	125	190	240	380	500	900	1300	1700
	Output shaft facing downward	1.8	4.4	8.5	14	21	40	80	145	220	275	460	600	1000	1500	1900

When to replace grease

Abrasion of the sliding parts of HarmonicDrive® is influenced by grease performance. Grease performance changes by temperature and deteriorates rapidly as the temperature rises. Therefore, the grease needs to be replaced earlier than usual. The graph below indicates the time to replace the grease from the relation between the grease temperature and the total number of rotations when the average load torque is equal to or less than the rated torque. Obtain the time to replace the grease from the following calculation formula when the average load torque exceeds the rated torque.

Calculation formula when the average load torque exceeds the rated torque

Formula 049-1

$$L_{GT}=L_{GTn} \times \left(\frac{Tr}{T_{av}}\right)^3$$

Symbols of the calculation formula 049-1

Table 049-2

L_{GT}	Replacement timing if it is equal to rated torque or more	Number of rotation	————
L_{GTn}	Replacement timing if it is equal to rated torque or less	Number of rotation	See the right-hand graph.
Tr	Rated torque	N·m,kgf·m	See the "Rating table" on page 038 and 039.
T_{av}	Average load torque on the output side		Calculation formula: See Page 014.

When to replace grease: L_{GTn} (when the average load torque is equal to or less than the rated torque)

Graph 049-1

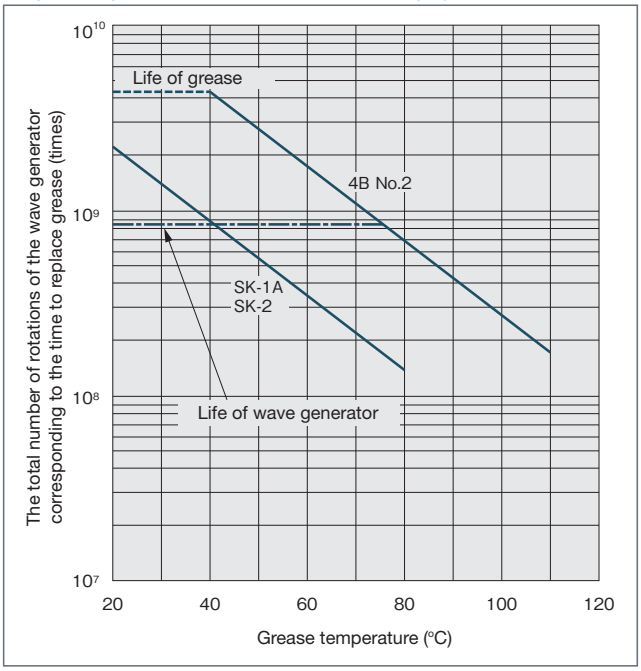

* Life of wave generator indicates the 10% of damage possibility.

■Other precautions

1. Avoid using it with other grease. HarmonicDrive® should be placed in an independent case to be built into the equipment.

2. When you use HarmonicDrive® with the wave generator facing upward (see Figure 050-2 on Page 050) at low-speed rotation (input rotational speed: 1000 r/min or less) and in one direction, you should contact our branch office as it may cause lubrication problems.

3. Oil lubrication is standard for component-type models whose model number is 50 or more with a reduction ratio of 50. Use grease lubrication within half the rated torque.

4. 50% or higher of grease capacity/space capacity may cause grease leakage. In this case, contact us.

■Oil lubrication

See “Engineering data” on Page 018 for details of the lubricant.

Usage and oil level

1. For horizontal direction

The oil level shall be Size A of Figure 050-1.

Oil level for horizontal use

Table 050-1
Unit: mm

Model	8	11	14	17	20	25	32	40	45	50	58	65	80	90	100
A	6	8	10	12	14	17	24	31	35	38	44	50	59	66	74

Oil level for horizontal use

Fig. 050-1

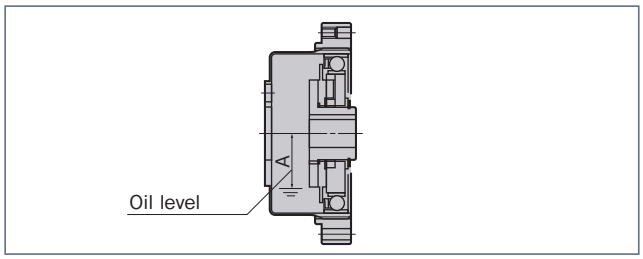

2. For vertical direction

Fill the center of the ball of the wave generator facing upward or downward with oil (Size B of Figure 050-2). An oil groove should be added to the flexspline. Instruct us when you place an order.

* The model is indicated as “IV” in Specification-1.

Oil level for vertical use

Fig. 050-2

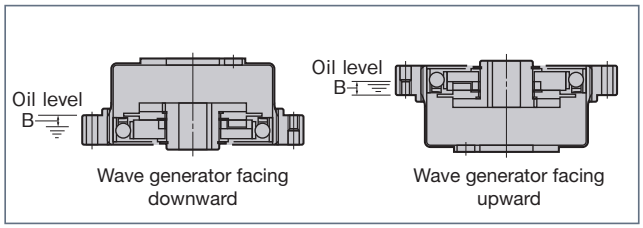

Oil level for vertical use

Table 050-2
Unit: mm

Model	8	11	14	17	20	25	32	40	45	50	58	65	80	90	100
B	2	2.3	2.5	3	3	5	7	9	10	12	13	15	19	22	25

Oil groove size of the flexspline

Table 050-3
Unit: mm

Symbol \ Model	20	25	32	40	45	50	58	65	80	90	100
T_2	27	34	45	56	61	68	79	90	114	120	142
B	2.5	2.5	3.5	3.5	3.5	5.5	5.5	5.5	6.5	6.5	6.5
W	2.8	3.5	4.0	4.0	4.0	6.0	6.0	6.0	7.0	7.0	7.0
t	1.2	1.2	1.4	1.4	1.4	2	2	2	3	3	3

* Model numbers 8, 11, 14 and 17 do not have an oil groove.

Oil groove size of the flexspline

Fig. 050-3

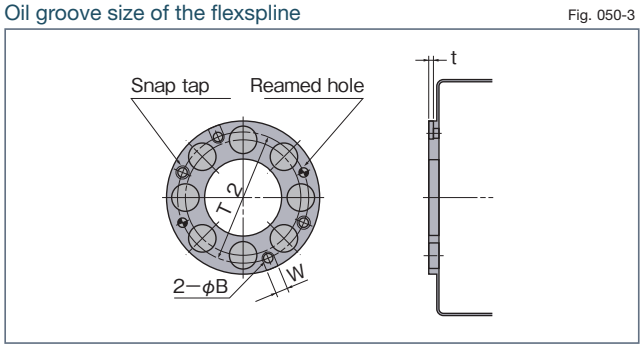

Oil quantity

Table 050-4
Unit: ℓ

Model	8	11	14	17	20	25	32	40	45	50	58	65	80	90	100
Oil quantity	0.004	0.006	0.01	0.02	0.03	0.07	0.13	0.25	0.32	0.4	0.7	1.0	2.0	2.8	3.8

When to replace oil

First time …… 100 hours after starting operation
Second time or later …… Every 1000 operation hours or every 6 months
Note that you should replace oil earlier than specified if the operating conditions are demanding.

Other precautions

1. Avoid using it with other grease. HarmonicDrive® should be placed in an independent case to be built in the equipment.

2. When you use model number 50 or an upper level at around the permissible input rotational speed on the ratings, you should contact our branch office as it may cause lubrication problems.

Installation precision

Maintain the recommended precision shown in Figure 051-1 and Table 051-1 to fully bring out the excellent performance of HarmonicDrive® for built-in design.

Recommended precision for the built-in case

Fig. 051-1

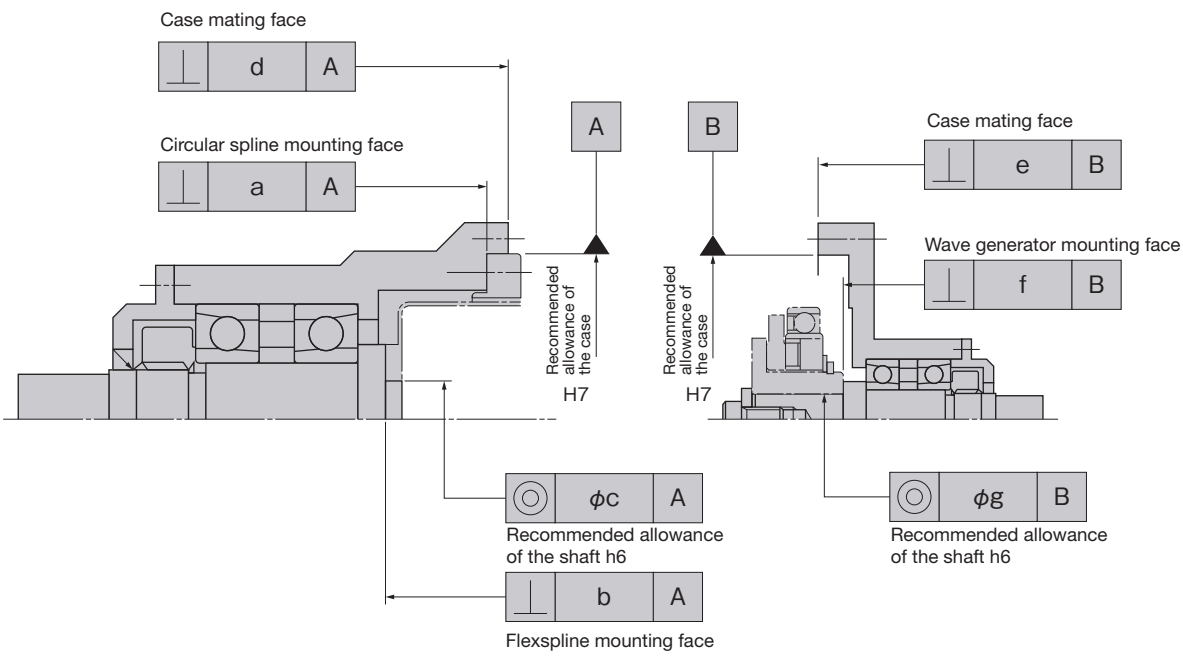

Recommended precision for the built-in case

Table 051-1
Unit: mm

Symbol \ Model	8	11	14	17	20	25	32	40	45	50	58	65	80	90	100
a	0.008	0.011	0.011	0.012	0.013	0.014	0.016	0.016	0.017	0.018	0.020	0.023	0.027	0.029	0.031
b	0.006	0.006	0.008	0.011	0.014	0.018	0.022	0.025	0.028	0.030	0.032	0.035	0.040	0.043	0.045
ϕc	0.005	0.008	0.015	0.018	0.019	0.022	0.022	0.024	0.027	0.030	0.032	0.035	0.043	0.046	0.049
d	0.010	0.010	0.011	0.015	0.017	0.024	0.026	0.026	0.027	0.028	0.031	0.034	0.043	0.050	0.057
e	0.010	0.010	0.011	0.015	0.017	0.024	0.026	0.026	0.027	0.028	0.031	0.034	0.043	0.050	0.057
f	0.012	0.012	0.017 (0.008)	0.020 (0.010)	0.020 (0.010)	0.024 (0.012)	0.024 (0.012)	0.032 (0.012)	0.032 (0.013)	0.032 (0.015)	0.032 (0.015)	0.032 (0.015)	0.036 (0.015)	0.036 (0.015)	0.036 (0.015)
ϕg	0.015	0.015	0.030 (0.016)	0.034 (0.018)	0.044 (0.019)	0.047 (0.022)	0.050 (0.022)	0.063 (0.024)	0.065 (0.027)	0.066 (0.030)	0.068 (0.033)	0.070 (0.035)	0.090 (0.043)	0.091 (0.046)	0.092 (0.049)

* The value in the parentheses indicates the rigid type of wave generator (without Oldham's coupling structure).

Sealing mechanism

The following sealing mechanism is required to prevent grease leakage and maintain the high durability of HarmonicDrive®.

- Rotating and sliding area ..... Oil seal (with a spring). Take care regarding flaws on the shaft.
- Flange mating face and mating ..... O-ring and seal agent. Take care regarding the distortion on the plane and how the O-ring is engaged.
- Screw hole area ..... Use a screw lock agent (Locktite 242 is recommended) or seal tape.

(Note) Observe the description above for the particular use of Harmonic grease® 4B No.2.

Installation of three parts of basic elements

■Installation of the wave generator

Maximum hole diameter size

The standard hole diameter of the wave generator is as shown in the dimensional outline drawing and may be changed in the range up to the maximum dimension shown in the table. The JIS standard is recommended for the key groove size. The valid length of the key shall be the value fully durable for the transmission torque.

* The shape can be changed to special forms for taper holes and so on.

Oldham's coupling mechanism may be eliminated to make a hole diameter larger than the maximum size. The maximum hole diameter can be up to the value shown in the table below taking deformation of the wave generator plug by load torque into consideration.
(This is the value including the dimension of the key groove depth.)

Hole diameter of the wave generator

Fig. 052-1

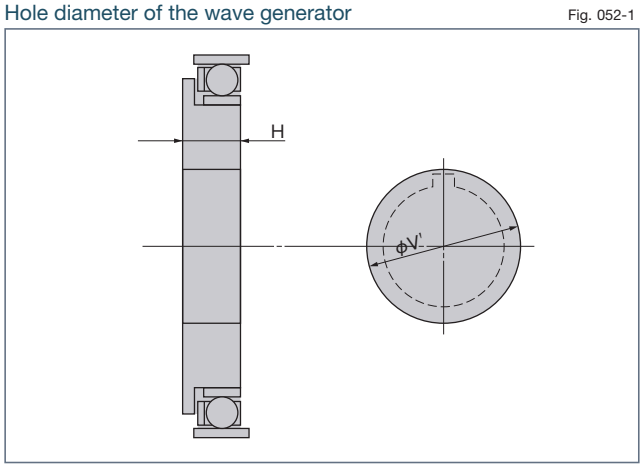

Hole diameter of the wave generator hub

Table 052-1
Unit: mm

Size \ Model	8	11	14	17	20	25	32	40	45	50	58	65	80	90	100
Stand. dimension (H7)	3	5	6	8	9	11	14	14	19	19	22	24	28	28	28
Prepared hole size	—	—	3	4	5	6	6	10	10	10	13	16	16	19	22
Maximum size	—	—	8	10	13	15	15	20	20	20	25	30	35	37	40

Plug maximum diameter and minimum thickness of installing the wave generator plug directly on the input shaft

Table 052-2
Unit: mm

Size \ Model	8	11	14	17	20	25	32	40	45	50	58	65	80	90	100
Max. hole φV'	10	14	17	20	23	28	36	42	47	52	60	67	72	84	95
Min. plug thickness H $^{0}_{-0.1}$	5.7	6.7	7.2	7.6	11.3	11.3	13.7	15.9	17.8	19	21.4	23.5	28.5	31.3	34.9

Thrust force of the wave generator and fixation of the shaft

Thrust force is applied on the wave generator during operation due to elastic deformation of the flexspline of HarmonicDrive®. The thrust force used as a reducer ((1), (2) and (3) on Page 010) works in the diaphragm direction of the flexspline (Figure 052-2), while the thrust force used as an overdrive ((4), (5) and (6) on Page 010) works in the opposite direction (Figure 052-2).
You can obtain the thrust force (maximum value) of the wave generator with the following calculation formula. Thrust force varies depending on the operating condition. It tends to increase and shows almost the same value as that obtained by the calculation formula when the torque is high, when the speed is very low and when the rotation is constant and continuous. Work out a design to eliminate the thrust force of the wave generator in either case.

(Note) Contact us when you fix the wave generator hub and the input shaft with a retaining screw.

Shapes and sizes of the wave generator

Fig. 052-2

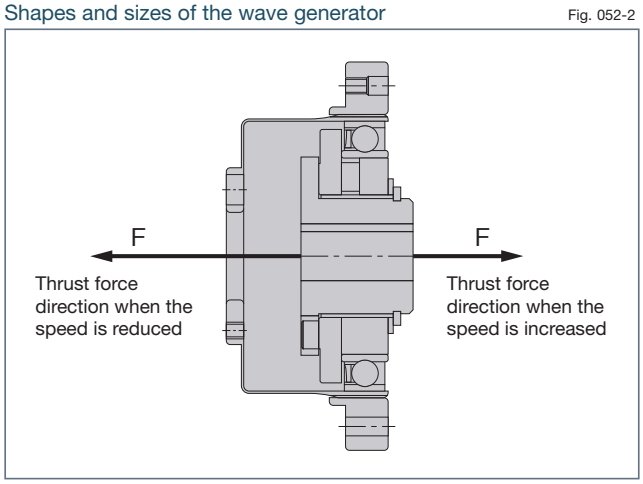

Calculation formula of thrust force

Table 052-3

Reduction ratio	Calculation formula
30	$F=2\times\frac{T}{D}\times0.07\times\tan32°$
50	$F=2\times\frac{T}{D}\times0.07\times\tan30°$
80 or more	$F=2\times\frac{T}{D}\times0.07\times\tan20°$

Symbols of the calculation formula

Table 052-4

F	Thrust force	N	See Fig. 052-2.
D	(Model) ×0.00254	m	
T	Output torque	N·m	

Example of calculation

Formula 052-1

Model name : CSF series
Model number : 32
Reduction ratio: i=50
Output torque : 382 N·m (max. permissible momentary torque)

$$F=2\times\frac{382}{(32\times0.00254)}\times0.07\times\tan30°$$

F=380N

Shapes and sizes of the wave generator

The shapes and sizes of the wave generator of the CSF series are different from those of the CSG series. Exercise extreme care in design and installation. It should also be noted that the mounting bolts of the flexspline must not interfere with the wave generator. Table 053-1 and Figure 053-1 show a comparison of the shapes and sizes of the wave generator.

Comparison of shapes and sizes of the wave generator — Fig. 053-1

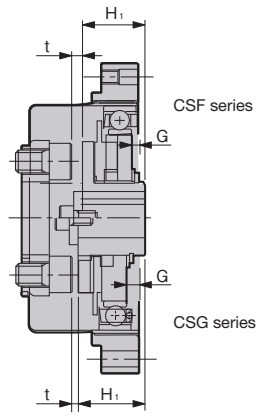

Sizes of the wave generator hub

Table 053-1
Unit: mm

Symbol \ Model		14	17	20	25	32	40	45	50	58	65
G	CSG Series	1.4	1.6	1.5	3.5	4.2	5.6	6.3	7	8.2	9.5
	CSF Series	0.4	0.3	0.1	2.1	2.5	3.3	3.7	4.2	4.8	5.8
H_1 $^{0}_{-0.1}$	CSG Series	18.5	20.7	21.5	21.6	23.6	29.7	30.5	34.8	38.3	44.6
	CSF Series	17.6	19.5	20.1	20.2	22	27.5	27.9	32	34.9	40.9
t	CSG Series	1.6	1.3	1.5	1.4	2.2	2.3	3.5	2.2	5.4	3.9
	CSF Series	2.5	2.5	2.9	2.8	3.8	4.5	6.1	5.0	8.8	7.6

(Note) "t" indicates the size for Table 054-1 of the flexspline mounting flange.

■Installation of the flexspline

For model No. 8

(a) As force is transmitted from the flexspline to the output shaft with the concavo-convex engagement, convex work should be conducted on the flexspline mounting area of the output shaft as shown in Figure 053-2-(1).

(b) Use a presser as shown in Figure 053-2-(2) for positioning the flexspline on the output shaft to build in the flexspline as shown in Figure 053-2-(3) to achieve the specified precision.

(c) We recommend that you use a M3 hexagonal bolt to retain the flexspline. Use Locktite #242 to tighten the bolts.

Installation of model number 8 flexspline — Fig. 053-2

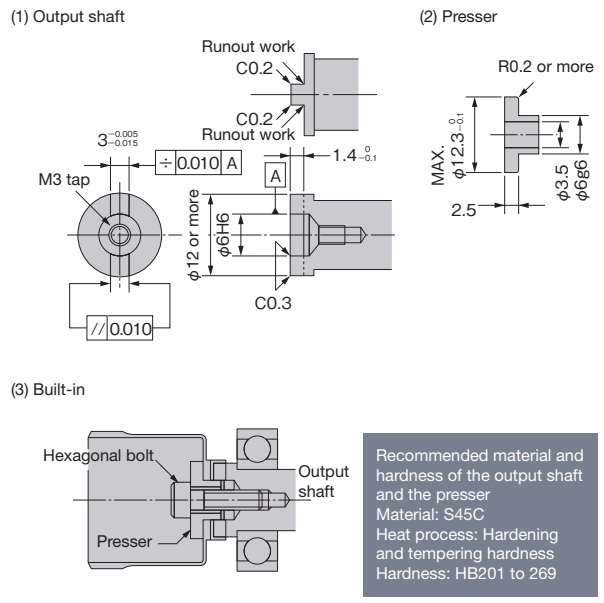

Recommended size for the mounting flange for model number 11 or more

The mounting flange diameter shall not exceed the boss diameter of the flexspline as shown in Figure 054-1. Attach "R" on the flange that is in contact with the diaphragm. Observe this carefully as the diaphragm may be damaged if the diameter is too large or "R" is missing.

Mounting flange size

Table 054-1
Unit: mm

Symbol \ Model	11	14	17	20	25	32	40	45	50	58	65	80	90	100
$\phi D^{0}_{-0.1}$	17.8	24.5	29	34	42	55	68	74	83	95.8	106	130	145	162
$R^{+0.1}_{0}$	0.5	1.2	1.2	1.4	1.5	2	2.5	2	2.5	2.5	2.5	2.5	2.5	2.5
t	2	2	2.5	2.5	5	7	7	8	8	12	12	15	20	25

Material and hardness of the mounting flange

Use the following material and hardness so that the bolts do not cave in or become loose due to surface pressure between the bolt bearing surface and the flange.

Material: S45C (DINHC45)
Heat process: Hardening and tempering
Hardness: HB200 to 270

Recommended size for the mounting flange

Fig. 054-1

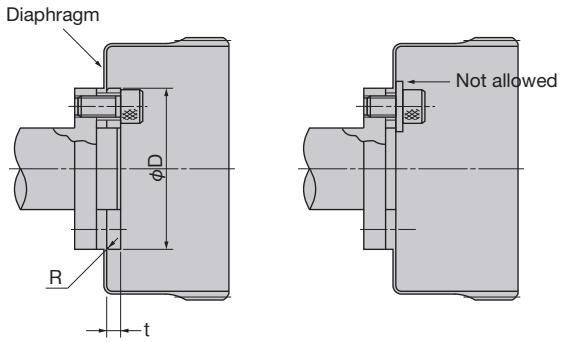

Warning: The bolt head, nut and washer should not exceed Size J of outline drawing on page 040.

Tightening bolts of the flexspline

Use bolts, bolts and pins (pin: option) for installing the flexspline.

- Intensity of the selected bolt
- Tightening of bolts and the tightening torque
- Surface condition of bolts and female screws
- Friction coefficient of the contact surface

As the transmission torque on the tightening area changes significantly according to the conditions described above, design and part control corresponding to the load condition should be conducted. Use the following description as a rough indication to decide whether only bolts or pins and a friction plate should be used in installation.

(1) Installation only with bolts if the load torque is equal to or less than the peak torque for start and stop (Table 055-1, Table 056-1)
(2) Installation with bolts and pins or a friction plate when the maximum permissible momentary torque shown in the ratings is expected to be applied (pin: Table 055-2, Figure 055-1, Table 056-2, Figure 056-1 on page 056).

* Use the value in the table as a reference value.

CSF series: Installation only with bolts

Table 055-1

Item \ Model		11	14	17	20	25	32	40	45	50	58	65	80	90	100
Number of bolts		6	6	6	8	8	8	8	8	8	8	8	8	8	12
Bolt size		M3	M4	M5	M5	M6	M8	M10	M12	M14	M14	M16	M16	M20	M20
Installation of bolts: P.C.D.	mm	12	17	19	24	30	40	50	54	60	70	80	100	110	130
Bolt tightening torque	N·m	2.0	4.5	9.0	9.0	15.3	37	74	128	205	205	319	319	622	622
	kgf·m	0.20	0.46	0.92	0.92	1.56	3.8	7.5	13.1	20.9	20.9	32.5	32.5	63.5	63.5
Bolt transmission torque	N·m	15	35	64	108	186	460	910	1440	2160	2550	3980	6220	8560	15170
	kgf·m	1.5	3.6	6.5	11	19	47	93	147	220	260	406	635	873	1548

CSF series: Installation only with bolts and pins

Table 055-2

Item \ Model		11	14	17	20	25	32	40	45	50	58	65	80	90	100
Number of pins		2	2	2	2	2	2	2	2	2	2	2	2	2	2
Pin size	mm	2	3	3	3	4	5	6	6	8	8	8	8	12	10
Pinhole P.C.D.	mm	15.2	18.5	21.5	27	34	45	56	61	68	79	90	114	120	142
Bolt and pin transmission torque	N·m	29	74	108	167	314	725	1370	1950	3160	3710	5310	7910	12540	18450
	kgf·m	3.0	7.5	11	17	32	74	140	199	323	379	542	807	1280	1883

(Table 055-1, 055-2/Notes)

1. It is assumed that the material of the female screws can endure the bolt tightening torque.
2. Recommended bolt Bolt name: JIS B 1176 hexagonal bolt Intensity type: JIS B 1051 12.9 or more
3. Torque efficiency: K=0.2
4. Tightening efficiency: A=1.4
5. Tightening friction coefficient μ=0.15
6. Pin type: Parallel pin, material: S45C-Q, shearing stress: τ=30 kg/mm^2

CSF series: Hole positions of bolts and pins

Fig. 055-1

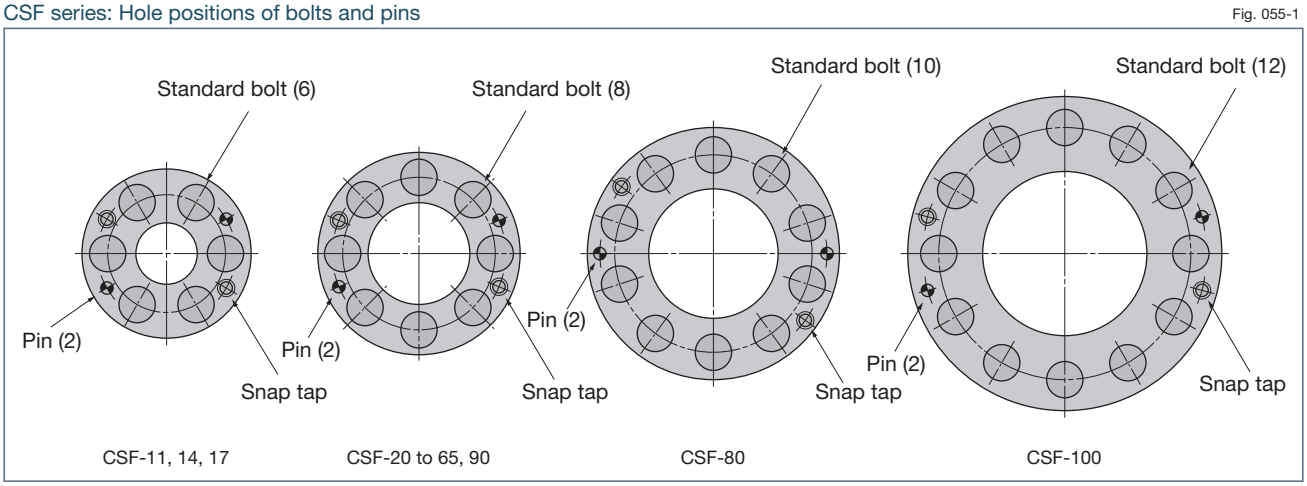

CSG series: Installation only with bolts

Table 056-1

Item \ Model		14	17	20	25	32	40	45	50	58	65
Number of bolts		6	6	8	8	8	8	8	8	8	8
Bolt size		M4	M5	M5	M6	M8	M10	M12	M14	M14	M16
Installation of bolts: P.C.D.	mm	17	19	24	30	40	50	54	60	70	80
Bolt tightening torque	N·m	5.4	10.8	10.8	18.4	44.4	88.8	154	246	246	383
	kgf·m	0.55	1.10	1.10	1.87	4.53	9.06	15.7	25.1	25.1	39.1
Bolt transmission torque	N·m	43	77	130	230	555	1110	1728	2636	3075	4785
	kgf·m	4.4	8	13	23	57	113	176	269	314	488

CSG series: Installation only with bolts and pins

Table056 -2

Item \ Model		14	17	20	25	32	40	45	50	58	65
Number of pins		4	4	4	4	4	4	4	4	4	4
Pin size	mm	3	3	3	4	5	6	6	8	8	8
Pinhole P.C.D.	mm	18.5	21.5	27	34	45	56	61	68	79	90
Bolt and pin transmission torque	N·m	120	166	242	481	1070	2040	2742	4646	5410	7445
	kgf·m	12	17	25	49	110	208	280	474	552	760

(Table 056-1, 056-2/Notes)

1. It is assumed that the material of the female screws can endure the bolt tightening torque.
2. Recommended bolt Bolt name: JIS B 1176 hexagonal bolt Intensity type: JIS B 1051 12.9 or more
3. Torque efficiency: K=0.2
4. Tightening efficiency: A=1.4
5. Tightening friction coefficient μ=0.15
6. Pin type: Parallel pin, material: S45C-Q, shearing stress: τ=30 kg/mm^2

CSG series: Hole positions of bolts and pins

Fig. 056-1

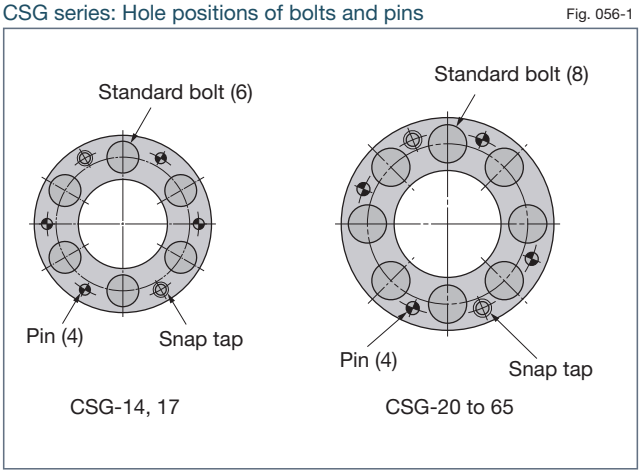

■Installation of the circular spline

Perform design and part control corresponding to the load condition for installation of the circular spline in the same way as the flexspline. Transmission torques by the recommended bolts and tightening torque are shown as follows. When the transmission torque is smaller than the load torque, the additional use of pins and bolts should be reviewed. Perform installation to meet the requirements of each series.

CSG series: Installation with bolts

Table 057-1

Item \ Model		14	17	20	25	32	40	45	50	58	65
Number of bolts		8	16	16	16	16	16	16	16	16	16
Bolt size		M3	M3	M3	M4	M5	M6	M8	M8	M10	M10
Installation of bolts: P.C.D.	mm	44	54	62	75	100	120	140	150	175	195
Bolt tightening torque	N·m	2.0	2.0	2.0	4.5	9.0	15.3	37	37	74	74
	kgf·m	0.20	0.20	0.20	0.46	0.92	1.56	3.8	3.8	7.5	7.5
Bolt transmission torque	N·m	72	175	196	419	901	1530	3238	3469	6475	7215
	kgf·m	7.3	18	20	43	92	156	330	354	661	736

CSF series: Installation with bolts

Table 057-2

Item \ Model		8	11	14	17	20	25	32	40	45	50	58	65	80	90	100
Number of bolts		8	8	6	12	12	12	12	12	12	12	12	12	16	16	16
Bolt size		M2	M2.5	M3	M3	M3	M4	M5	M6	M8	M8	M10	M10	M10	M12	M12
Installation of bolts: P.C.D.	mm	25.5	35	44	54	62	75	100	120	140	150	175	195	240	270	300
Bolt tightening torque	N·m	0.54	1.1	2.0	2.0	2.0	4.5	9.0	15.3	37	37	74	74	74	128	128
	kgf·m	0.055	0.11	0.20	0.20	0.20	0.46	0.92	1.56	3.8	3.8	7.5	7.5	7.5	13.1	13.1
Bolt transmission torque	N·m	17	39	54	131	147	314	676	1150	2440	2620	4820	5370	8820	14450	16050
	kgf·m	1.7	4.0	5.5	13	15	32	69	117	249	267	492	548	900	1474	1638

(Table 057-1, 057-2/Notes)

1. It is assumed that the material of the female screws can endure the bolt tightening torque.
2. Recommended bolt　Bolt name: JIS B 1176 hexagonal bolt　Intensity type: JIS B 1051 12.9 or more
3. Torque efficiency: K=0.2
4. Tightening efficiency: A=1.4
5. Tightening friction coefficient μ=0.15

■Order of installing of three parts of basic elements

Install the wave generator after setting the circular spline and the flexspline on the equipment. Installing the generator in other ways may cause a “dedoi-dal” condition (see Page 029) and damage the tooth plane. Take extra care.

Order of appropriate installing three parts

Fig. 058-1

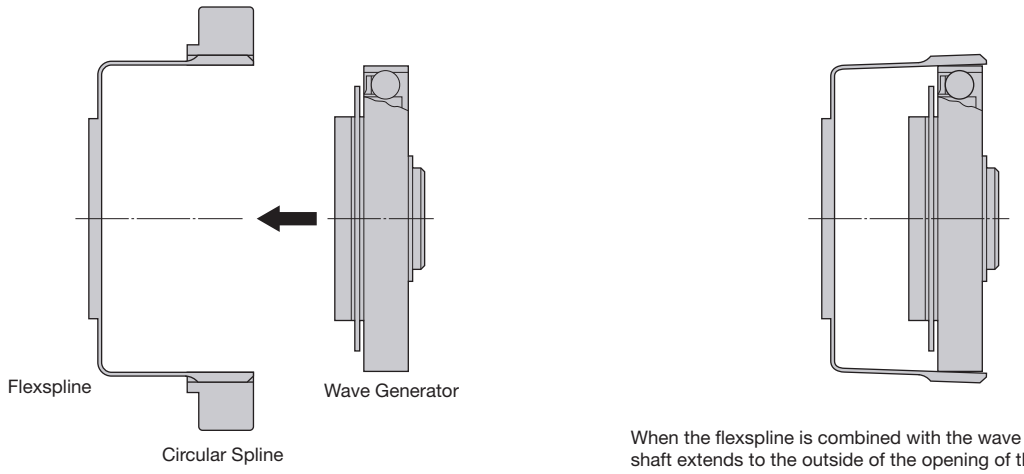

■Precautions on assembly

HarmonicDrive® may generate vibration and abnormal sound due to problems during assembly. Perform assembly based on the following precautions.

Precautions on the wave generator

1. Avoid such assembly where excessive force is applied to the wave generator bearing. You can smoothly insert the wave generator by turning it.
2. Pay attention so that the effect of misalignment and turnover is within the recommended value (see “Built-in precision” on Page 051) for the wave generator without Oldham’s coupling mechanism.

Precautions on the circular spline

1. Is flatness of the mounting surface poor or distorted?
2. Is any embossment of the screw hole area, burr or trapped foreign matter found?
3. Have chamfering and relief working of the corner been conducted to prevent interference of the corner of the circular spline in the house built-in area?
4. Can the circular spline rotate built in the house? Does it interfere with or catch on any part?
5. Does any bolt inserted into the mounting bolt hole interfere with the circular spline and rotate irregularly due to the bolt hole being misaligned or oblique?
6. Do not tighten the bolts with the specified torque all at once. Tighten the bolts temporarily with about half the specified torque, and then tighten them with the specified torque. Tighten them in an even, crisscross pattern.
7. Avoid pinning the circular spline if possible as it may reduce the rotational precision.

Precautions on the flexspline

1. Is flatness of the mounting surface poor or distorted?
2. Is any embossment of the screw hole area, burr or trapped foreign matter found?
3. Have chamfering and relief working of the corner been conducted to prevent the interference of the corner of the circular spline in the house built-in area?
4. Does any bolt inserted into the mounting bolt hole interfere with the circular spline and rotate irregularly due to the bolt hole being misaligned or oblique?
5. Do not tighten the bolts with the specified torque all at once. Tighten the bolts temporarily with about half the specified torque, and then tighten them with the specified torque. Tighten them in an even, crisscross pattern.
6. Does it engage with the circular spline in an extremely unbalanced way when it is combined? If it is unbalanced, they could be misaligned or not upright.
7. Avoid hitting the tip of the teeth on the opening and inserting the circular spline with excessive force in assembling it

On anti-rust provision

The surface of HarmonicDrive® is not anti-rust treated. Apply anti-rust agent to the surface if required. Contact us if you would like us to provide the surface with anti-rust treatment.

Application

Tool changer of a metal-cutting machine

Fig. 059-1

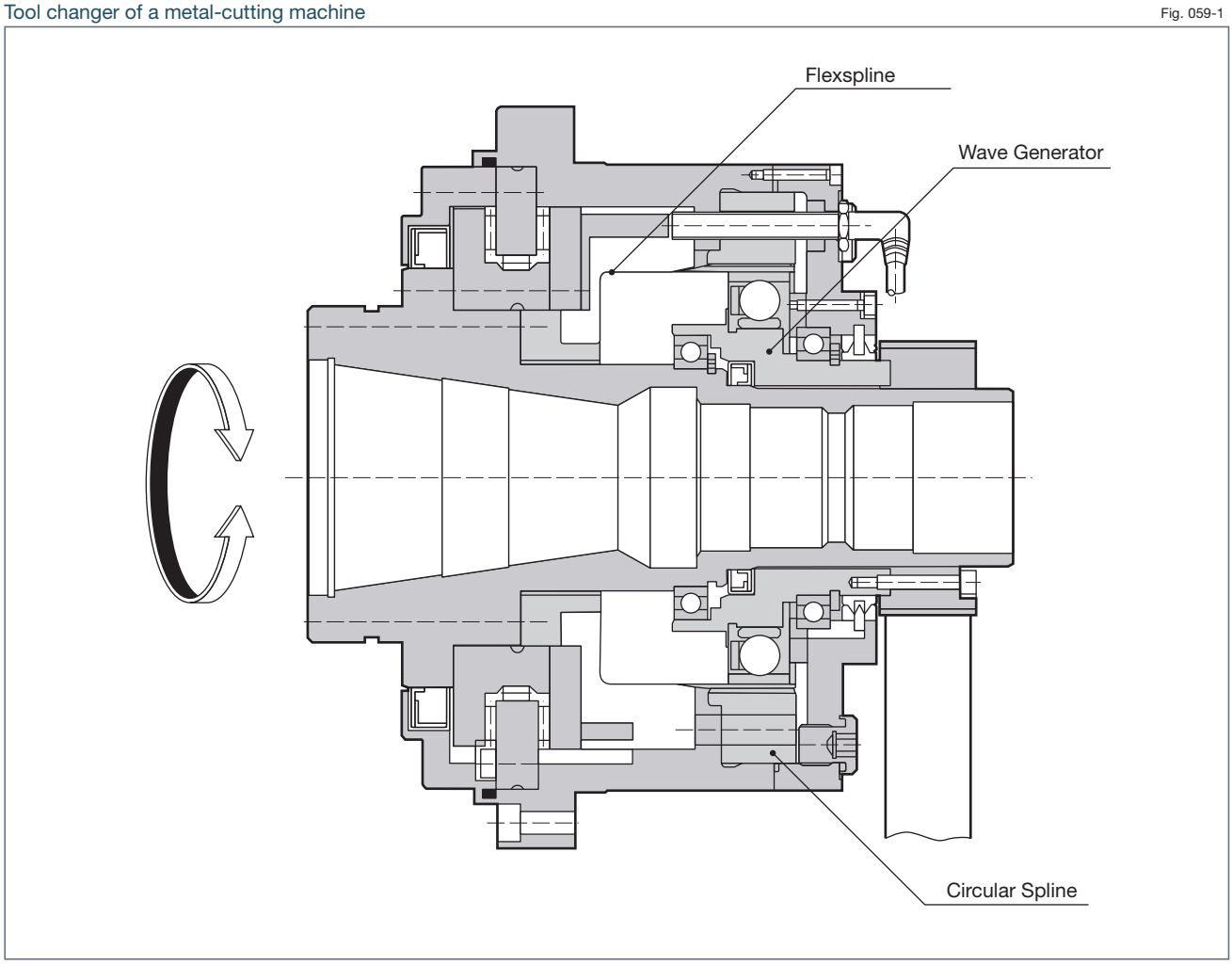

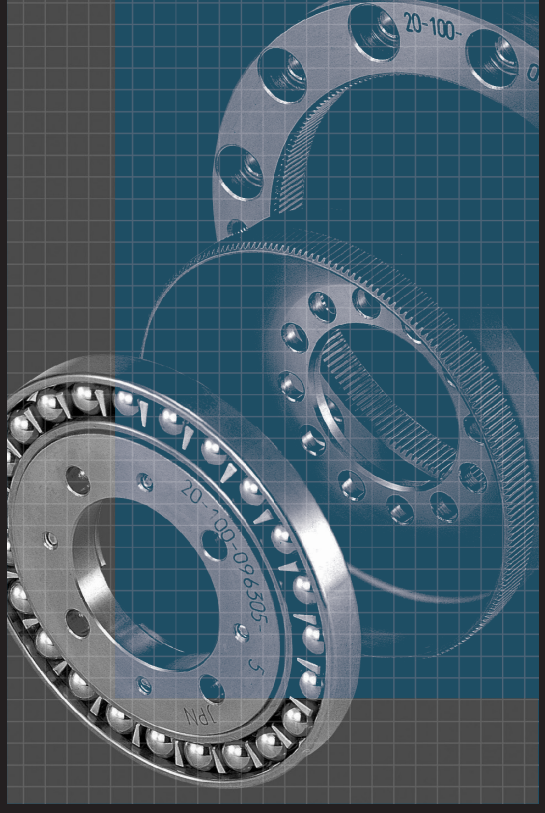

CSD Series

Component Type CSD

Features

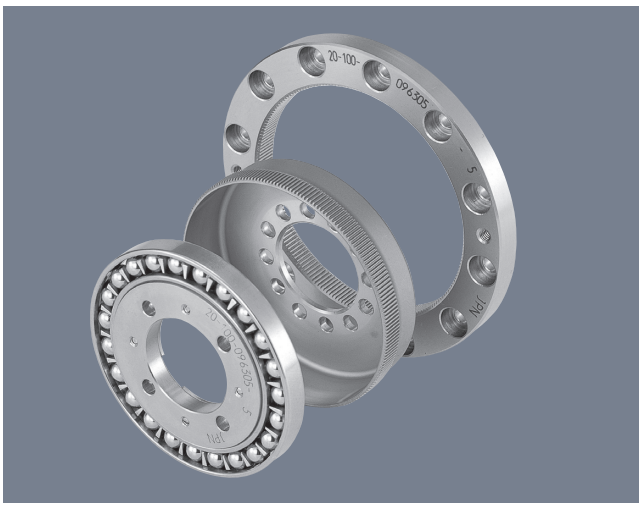

■CSD Series component type

The CSD series component type has pursued flatness to the maximum. The length to the shaft direction has been shortened by about 50% compared to the CSG/CSF series. It is optimum for applications that demand flat design.

Features of CSD series

- ■Compact and simple design
- ■High torque capacity
- ■High stiffness
- ■Non-backlash
- ■High positioning and rotational accuracies
- ■Coaxial input and output

Structure of CSD series component type

Fig. 062-1

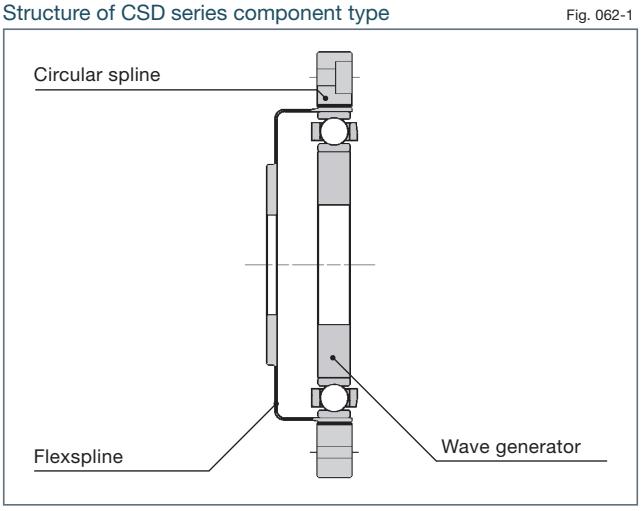

Comparison of lengths of shaft direction

Fig. 062-2

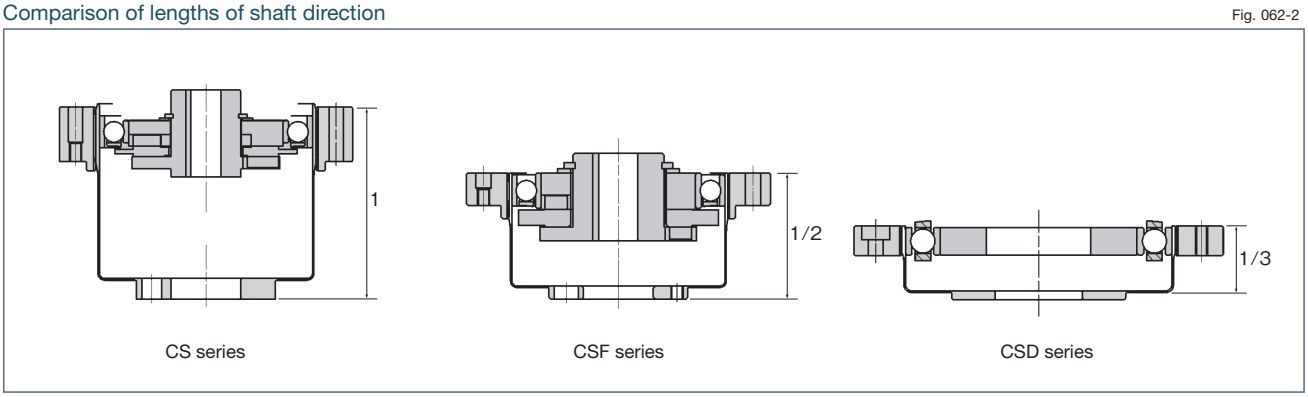

Example of CSD series installation

Fig. 062-3

Rotary table for industrial machine

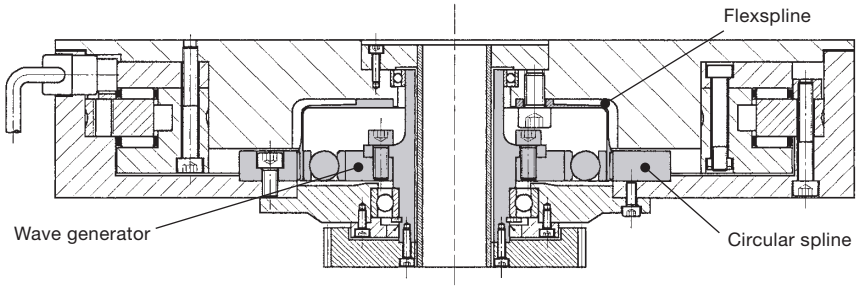

* For usage as this installation example, the sealing mechanism is required to prevent grease leakage.

Model and Symbol

CSD - 20 - 100 - 2A - GR - SP

Table 063-1

Model name	Model No.	Reduction ratio*					Model	Special specification
CSD	14	50	80	100	—	—	2A-GR=component type (2A-R for Model No. 14, 17)	None=Standard product SP=Special specifications such as shapes and performance BB=In case boss hole of flexspline is max. value
	17	50	80	100	120	—		
	20	50	80	100	120	160		
	25	50	80	100	120	160		
	32	50	80	100	120	160		
	40	50	80	100	120	160		
	50	50	80	100	120	160		

* The reduction ratio indicates the value for the following condition.Input: wave generator, fixed: circular spline, output: flexspline

Technical Data

Rating table

Table 063-2

Model	Reduction ratio	Rated torque at input 2000r/min		Permissible peak torque at start/stop		Permissible max. value of ave. load torque		Instantaneous permissible max. torque		Permissible max. input rotational speed (r/min)		Permissible ave. input rotational speed (r/min)		Inertia moment	
		N·m	kgf·m	N·m	kgf·m	N·m	kgf·m	N·m	kgf·m	Oil lubricant	Grease lubricant	Oil lubricant	Grease lubricant	I $\times10^{-4}$kg·m^2	J $\times10^{-5}$kgf·ms^2
14	50	3.7	0.38	12	1.2	4.8	0.49	24	2.4	14000	8500	6500	3500	0.021	0.021
	80	5.4	0.55	16	1.6	7.7	0.79	31	3.2						
	100	5.4	0.55	19	1.9	7.7	0.79	31	3.2						
17	50	11	1.1	23	2.3	18	1.8	48	4.9	10000	7300	6500	3500	0.054	0.055
	80	15	1.5	29	3.0	19	1.9	55	5.6						
	100	16	1.6	37	3.8	27	2.8	55	5.6						
	120	16	1.6	37	3.8	27	2.8	55	5.6						
20	50	17	1.7	39	4.0	24	2.4	69	7.0	10000	6500	6500	3500	0.090	0.092
	80	24	2.4	51	5.2	33	3.4	76*(65)	7.7*(6.6)						
	100	28	2.9	57	5.8	34	3.5	76*(65)	7.7*(6.6)						
	120	28	2.9	60	6.1	34	3.5	76*(65)	7.7*(6.6)						
	160	28	2.9	64	6.5	34	3.5	76*(65)	7.7*(6.6)						
25	50	27	2.8	69	7.0	38	3.9	127	13.0	7500	5600	5600	3500	0.282	0.288
	80	44	4.5	96	9.8	60	6.1	152*(135)	15*(14)						
	100	47	4.8	110	11	75	7.6	152*(135)	15*(14)						
	120	47	4.8	117	12	75	7.6	152*(135)	15*(14)						
	160	47	4.8	123	13	75	7.6	152*(135)	15*(14)						
32	50	53	5.4	151	15	75	7.6	268	27	7000	4800	4600	3500	1.09	1.11
	80	83	8.5	213	22	117	12	359*(331)	37*(34)						
	100	96	9.8	233	24	151	15	359*(331)	37*(34)						
	120	96	9.8	247	25	151	15	359*(331)	37*(34)						
	160	96	9.8	261	27	151	15	359*(331)	37*(34)						
40	50	96	9.8	281	29	137	14	480	49	5600	4000	3600	3000	2.85	2.91
	80	144	15	364	37	198	20	685*(580)	70*(59)						
	100	185	19	398	41	260	27	694*(580)	71*(59)						
	120	205	21	432	44	315	32	694*(580)	71*(59)						
	160	206	21	453	46	316	32	694*(580)	71*(59)						
50	50	172	18	500	51	247	25	1000	102	4500	3500	3000	2500	8.61	8.78
	80	260	27	659	67	363	37	1300	133						
	100	329	34	686	70	466	48	1440*(1315)	147*(134)						
	120	370	38	756	77	569	58	1440*(1315)	147*(134)						
	160	370	38	823	84	590	60	1577*(1315)	161*(134)						

(Note) 1. Inertia moment: $I=\frac{1}{4}GD^2$
2. The maximum permissible momentary torque value marked by an asterisk (*) is restricted by the tightening torque of the flexspline.
3. The parenthesized value indicates the value when the boss hole of the flexspline has the maximum value (BB type).
4. See “Technical data” on Page 012 for details of the terms.
5. When the maximum permissible momentary torque is expected to be applied, see “Bolt tightening of the flexspline” of each series.

Outline drawing

You can download the CAD data (DXF) of this product from the following homepage.
URL: https://www.hds.co.jp/

Fig. 064-1

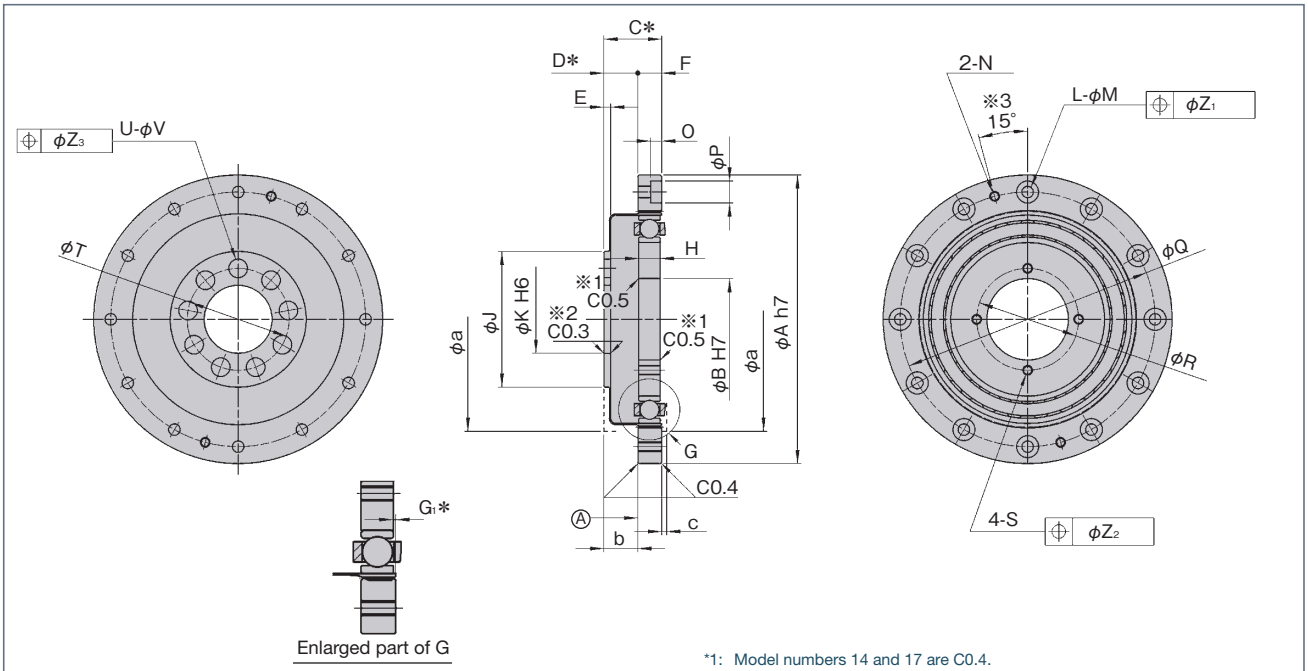

*1: Model numbers 14 and 17 are C0.4.
*2: Model numbers 40 and 50 are C0.5.
*3: Model number 14 is 30° and model number 17 is 22.5°.
* Check details of the dimensions and shape with the delivered specifications.
* The allowance varies depending on the part manufacturing method (cast or machined products).
Contact us if the allowance is not described in the dimensions and is required.

■Structure and shape of the wave generator

The wave generator has an integral structure.

Fig. 064-2

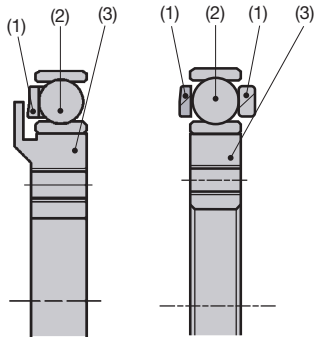

(1) Retainer
(2) Wave generator bearing
(3) Wave generator plug

The appearance of the retainer varies depending on the model number.

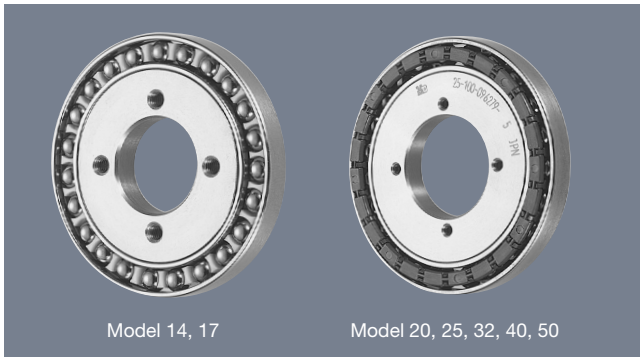

Measurement table

Table 065-1
Unit : mm

Symbol \ Model		14	17	20	25	32	40	50
ϕA h7		$50^{0}_{-0.025}$	$60^{0}_{-0.030}$	$70^{0}_{-0.030}$	$85^{0}_{-0.035}$	$110^{0}_{-0.035}$	$135^{0}_{-0.040}$	$170^{0}_{-0.040}$
ϕB h7		$11^{+0.018}_{0}$	$15^{+0.018}_{0}$	$20^{+0.021}_{0}$	$24^{+0.021}_{0}$	$32^{+0.025}_{0}$	$40^{+0.025}_{0}$	$50^{+0.025}_{0}$
C*		11	12.5	14	17	22	27	33
D*		$6.5^{+0.2}_{0}$	$7.5^{+0.2}_{0}$	$8^{+0.3}_{0}$	$10^{+0.3}_{0}$	$13^{+0.3}_{0}$	$16^{+0.3}_{0}$	$19.5^{+0.3}_{0}$
E		1.4	1.7	2	2	2.5	3	3.5
F		4.5	5	6	7	9	11	13.5
G_1*		$0.3^{+0.2}_{0}$	$0.3^{+0.2}_{0}$	$0.3^{+0.2}_{0}$	$0.4^{+0.2}_{0}$	$0.5^{+0.2}_{0}$	$0.6^{+0.2}_{0}$	$0.8^{+0.2}_{0}$
H		$4^{0}_{-0.1}$	$5^{0}_{-0.1}$	$5.2^{0}_{-0.1}$	$6.35^{0}_{-0.1}$	$8.6^{0}_{-0.1}$	$10.3^{0}_{-0.1}$	$12.7^{0}_{-0.1}$
ϕJ		23	27.2	32	40	52	64	80
ϕK H6	Standard	$11^{+0.011}_{0}$	$11^{+0.011}_{0}$	$16^{+0.011}_{0}$	$20^{+0.013}_{0}$	$30^{+0.013}_{0}$	$32^{+0.016}_{0}$	$44^{+0.016}_{0}$
	BB spec.	$11^{+0.011}_{0}$	$11^{+0.011}_{0}$	$20^{+0.013}_{0}$	$24^{+0.013}_{0}$	$32^{+0.016}_{0}$	$40^{+0.016}_{0}$	$50^{+0.016}_{0}$
L		6	8	12	12	12	12	12
ϕM		3.4	3.4	3.4	3.4	4.5	5.5	6.6
N		M3	M3	M3	M3	M4	M5	M6
O		—	—	3.3	3.3	4.4	5.4	6.5
ϕP		—	—	6.5	6.5	8	9.5	11
ϕQ		44	54	62	75	100	120	150
ϕR		17	21	26	30	40	50	60
S		M3	M3	M3	M3	M4	M5	M6
ϕT	Standard	17	19.5	24	30	41	48	62
	BB spec.	17	19.5	26	32	42	52	65
U	Standard	9	8	9	9	11	10	11
	BB spec.	9	8	12	12	14	14	14
ϕV	Standard	3.4	4.5	4.5	5.5	6.6	9	11
	BB spec.	3.4	4.5	3.4	4.5	5.5	6.6	9
$ϕZ_1$		0.2	0.2	0.2	0.2	0.25	0.25	0.3
$ϕZ_2$		0.25	0.25	0.2	0.2	0.25	0.25	0.3
$ϕZ_3$	Standard	0.2	0.25	0.25	0.25	0.3	0.5	0.5
	BB spec.	0.2	0.25	0.2	0.25	0.25	0.3	0.5
Inner wall of the case	ϕa	38	45	53	66	86	106	133
	b	6.5	7.5	8	10	13	16	19.5
	c	1	1	1.5	1.5	2	2.5	3.5
Mass (kg)		0.06	0.10	0.13	0.24	0.51	0.92	1.9

(Note) As for Model No. 14 and 17, the standard product is max. diameter.

- The clamp face of the circular spline is Face (A) in the drawing. Fit this face to install it on the case.
- You can change and add the following sizes.

Wave Generator:	B size
Flexspline:	U and V size
Circular Spline:	L and M size

- The C, D and G_1 sizes indicated by an asterisk are the mounting positions in the shaft direction and allowance of the three parts (wave generator, flexspline, circular spline) comprising HarmonicDrive®. Strictly observe these sizes as they affect the performance and intensity.
- As the flexspline is subject to elastic deformation, the inner wall should be ϕa, b, c or more to prevent possible contact with the case.
- Three parts (wave generator, flexspline, circular spline) are not built in when the product is delivered.

Angle transmission accuracy

See "Engineering data" for a description of terms.

Table 066-1

Model		14	17	20	25	32	40	50
Angle transmission error	$\times10^{-4}$rad	4.4	4.4	2.9	2.9	2.9	2.9	2.9
	arc-min	1.5	1.5	1.0	1.0	1.0	1.0	1.0

Hysteresis loss

See "Engineering data" for a description of terms.

Table 066-2

Reduction ratio \ Model		14	17	20	25	32	40	50
50	$\times10^{-4}$rad	7.3	5.8	5.8	5.8	5.8	5.8	5.8
	arc-min	2.5	2.0	2.0	2.0	2.0	2.0	2.0
80 or more	$\times10^{-4}$rad	5.8	2.9	2.9	2.9	2.9	2.9	2.9
	arc-min	2.0	1.0	1.0	1.0	1.0	1.0	1.0

Rigidity (Spring constant)

See "Engineering data" for a description of terms.

Table 066-3

Symbol \ Model			14	17	20	25	32	40	50
T_1		N·m	2.0	3.9	7.0	14	29	54	108
		kgf·m	0.2	0.4	0.7	1.4	3.0	5.5	11
T_2		N·m	6.9	12	25	48	108	196	382
		kgf·m	0.7	1.2	2.5	4.9	11	20	39
Reduction ratio 50	K_1	$\times10^4$N·m/rad	0.29	0.67	1.1	2.0	4.7	8.8	17
		kgf·m/arc-min	0.085	0.2	0.32	0.6	1.4	2.6	5.0
	K_2	$\times10^4$N·m/rad	0.37	0.88	1.3	2.7	6.1	11	21
		kgf·m/arc-min	0.11	0.26	0.4	0.8	1.8	3.4	6.3
	K_3	$\times10^4$N·m/rad	0.47	1.2	2.0	3.7	8.4	15	30
		kgf·m/arc-min	0.14	0.34	0.6	1.1	2.5	4.5	9
	θ_1	$\times10^{-4}$rad	6.9	5.8	6.4	7.0	6.2	6.1	6.4
		arc-min	2.4	2.0	2.2	2.4	2.1	2.1	2.2
	θ_2	$\times10^{-4}$rad	19	14	19	18	18	18	18
		arc-min	6.4	4.6	6.6	6.1	6.1	5.9	6.2
Reduction ratio 80 or more	K_1	$\times10^4$N·m/rad	0.4	0.84	1.3	2.7	6.1	11	21
		kgf·m/arc-min	0.12	0.25	0.4	0.8	1.8	3.2	6.3
	K_2	$\times10^4$N·m/rad	0.44	0.94	1.7	3.7	7.8	14	29
		kgf·m/arc-min	0.13	0.28	0.5	1.1	2.3	4.2	8.5
	K_3	$\times10^4$N·m/rad	0.61	1.3	2.5	4.7	11	20	37
		kgf·m/arc-min	0.18	0.39	0.75	1.4	3.3	5.8	11
	θ_1	$\times10^{-4}$rad	5.0	4.6	5.4	5.2	4.8	4.9	5.1
		arc-min	1.7	1.6	1.8	1.8	1.7	1.7	1.7
	θ_2	$\times10^{-4}$rad	16	13	15	13	14	14	13
		arc-min	5.4	4.3	5.0	4.5	4.8	4.8	4.6

* The values in this table are average values. The lower-limit value is approximately 80% of the displayed value.

Starting torque

See "Engineering data" for a description of terms. As the values in the table below vary depending on the use conditions, use them as reference values.

Table 067-1
Unit: cN·m

Reduction ratio \ Model	14	17	20	25	32	40	50
50	3.7	5.7	7.3	14	28	50	94
80	2.7	3.8	4.8	8.8	19	32	63
100	2.4	3.3	4.3	7.9	18	29	56
120	—	3.1	3.8	7.2	16	27	53
160	—	—	3.4	6.4	14	24	44

Overdrive starting torque

See "Engineering data" for a description of terms. As the values in the table below vary depending on the use conditions, use them as reference values.

Table 067-2
Unit: N·m

Reduction ratio \ Model	14	17	20	25	32	40	50
50	2.5	3.8	4.4	8.3	17	30	57
80	2.6	3.7	4.9	8.8	19	32	62
100	3.1	4.1	5.2	9.6	21	35	67
120	—	4.5	5.7	11	22	38	74
160	—	—	6.6	12	28	45	85

Ratcheting torque

See "Engineering data" for a description of terms.

Table 067-3
Unit: N·m

Reduction ratio \ Model	14	17	20	25	32	40	50
50	60	105	150	315	685	1260	2590
80	75	140	245	475	980	1960	3780
100	55	110	180	350	700	1470	2870
120	—	80	165	325	685	1330	2660
160	—	—	150	315	685	1260	2520

Buckling torque

See "Engineering data" for a description of terms.

Table 067-4
Unit: N·m

Model	14	17	20	25	32	40	50
All Ratios	190	330	560	1000	2200	4300	8000

On no-load running torque

No-load running torque means the torque on the input side (high- speed shaft side) required to put HarmonicDrive® under a no-load condition.

Measuring condition

Table 068-1

Reduction ratio 100			
Lubrication condition	Grease lubrication	Name	Harmonic grease® SK-1A (model 20 or more)
			Harmonic grease® SK-2 (model 14, 17)
		Application qty.	Appropriate application qty. (See page 071)
The torque value is the value after a trial run for two hours or longer at an input of 2000 r/min.			

* Contact us for oil lubrication.

■Correction quantity by reduction

The no-load running torque of HarmonicDrive® varies depending on the reduction ratio. Graphs 068-1 to 068-4 show the values for a reduction ratio of 100. Obtain other reduction ratios by adding the correction quantity shown in the right-hand table (Table 068-2).

Correction quantity for the no-load running torque

Table 068-2
Unit: Ncm

Model \ Reduction ratio	50	80	120	160
14	+0.56	+0.1	—	—
17	+0.95	+0.1	-0.1	—
20	+1.4	+0.2	-0.2	-0.39
25	+2.6	+0.4	-0.3	-0.72
32	+5.4	+0.8	-0.6	-1.5
40	+9.6	+1.5	-1.1	-2.6
50	+18	+2.7	-2.0	-4.8

■No-load running torque for a reduction ratio of 100

Input rotational speed: 500r/min

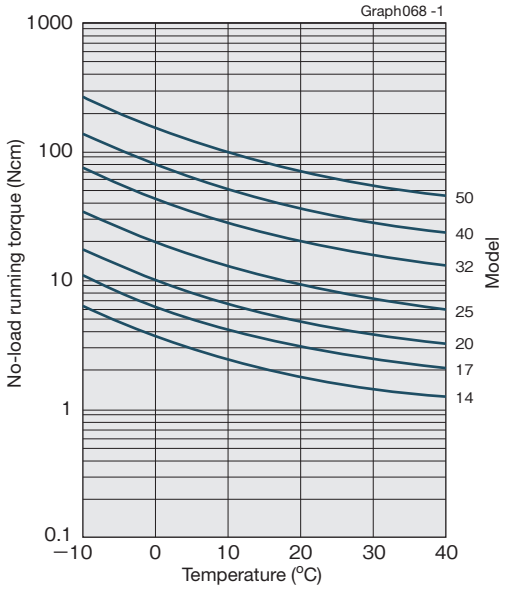

Input rotational speed: 1000r/min

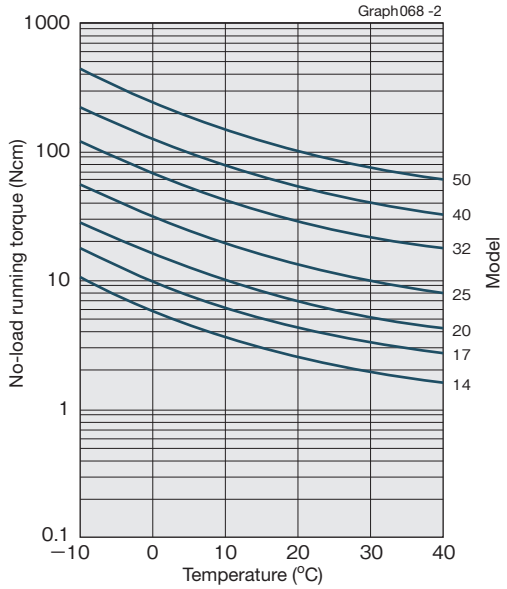

Input rotational speed: 2000r/min

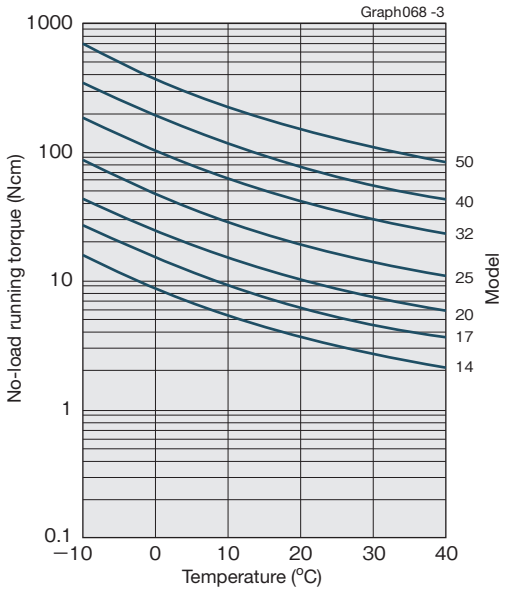

Input rotational speed: 3500r/min

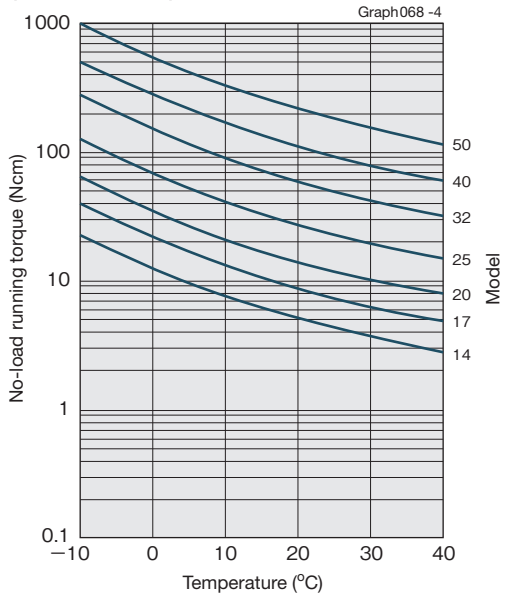

* The values in this graph are average value "$\bar{X}$".

Efficiency characteristics

The efficiency varies depending on the following conditions.

- Reduction ratio
- Input rotational speed
- Load torque
- Temperature
- Lubrication condition (Type of lubricant and the quantity)

Measuring condition

Table 069-1

Built-in	Measurement by building the recommended built-in precision into the product		
Load torque	The rated torque shown in the ratings (see the page 063)		
* When load torque is smaller than rated torque, the efficiency value gets low.See efficiency correction coefficient below.			
Lubricating condition	Grease lubrication	Name	Harmonic grease® SK-1A (model 20 or more)
			Harmonic grease® SK-2 (model 14, 17)
		Application qty.	Appropriate application qty. (see the page 071)

* Contact us for oil lubrication.

■Efficiency correction coefficient and efficiency correction amount

■Efficiency correction calculation formula

To determine efficiency due to “efficiency correction coefficient due to load torque” and “efficiency correction amount due to model No.”, use formula 069-1.

Calculation formula

Formula 069 -1

Efficiency $\eta = Ke \times (\eta_R + \eta e)$

Symbols of the calculation formula

Table069 -2

η	Efficiency	
Ke	Efficiency correction coefficient	Graph 069-1
η_R	Efficiency at rated torque	Graphs 070-1 to 070-6
ηe	Efficiency correction amount	Table 069-3

■Efficiency correction coefficient due to load torque

When load torque is lower than rated torque, efficiency drops. Determine the correction coefficient Ke in Graph 069-1, and then refer to the efficiency correction calculation formula to determine efficiency.

Efficiency correction coefficient

Graph 069-1

Torque ratio α is the value of load torque/rated torque (Rating table: page 063).

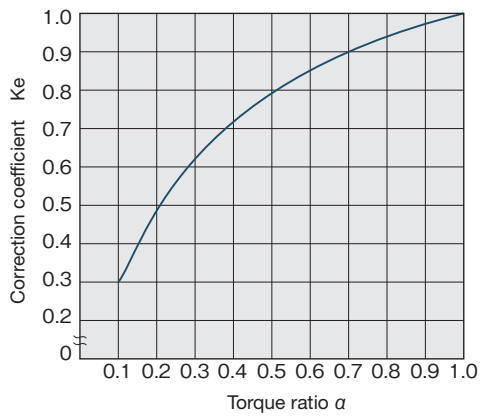

* Efficiency correction coefficient Ke=1 holds when the load torque is greater than the rated torque.

■Efficiency correction amount by model No.

With the CSD-2A, input-side support bearings and oil seal are attached. The effect of these varies depending on the model number.

Use Table 069-3 to determine the correction amount (ηe) for efficiency at rated torque for each model number.

Efficiency correction amount by model No.

Table069 -3
Unit: %

Model \ Reduction ratio	50	80	100	120	160
14	0.0	3.4	0.0	—	—
17	0.3	4.5	2.4	-0.2	—
20	-0.3	4.4	3.7	1.2	1.7
25	3.0	3.7	1.6	-1.0	-0.6
32	1.4	1.5	0.7	-2.0	-1.6
40	1.2	0.6	1.3	0.3	0.8
50	0.0	-0.5	0.0	-0.8	-0.3

■Efficiency at rated torque

Reduction ratio 50

Model 14

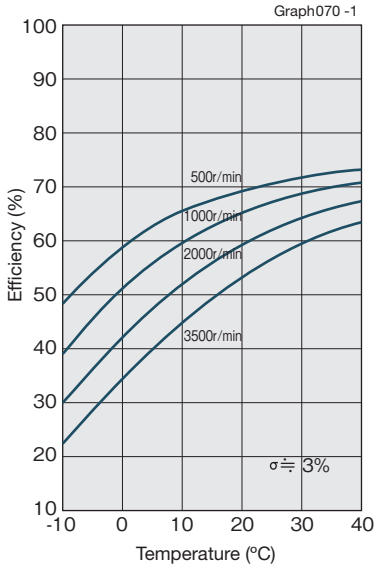

Model 17, 20

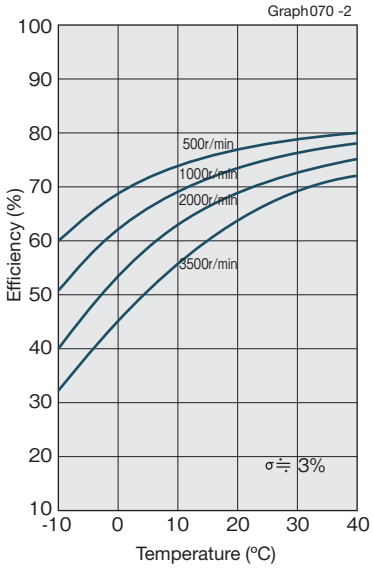

Model 25, 32, 40, 50

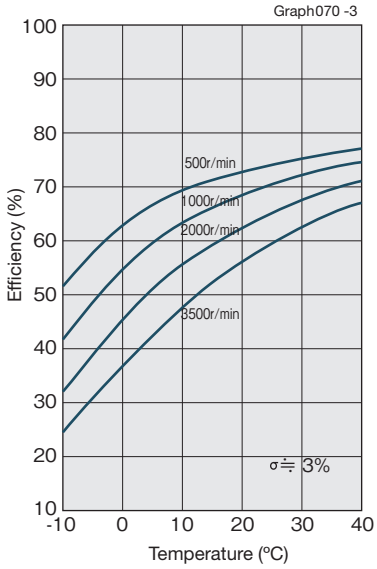

Reduction ratio 80, 100, 120

Model 14

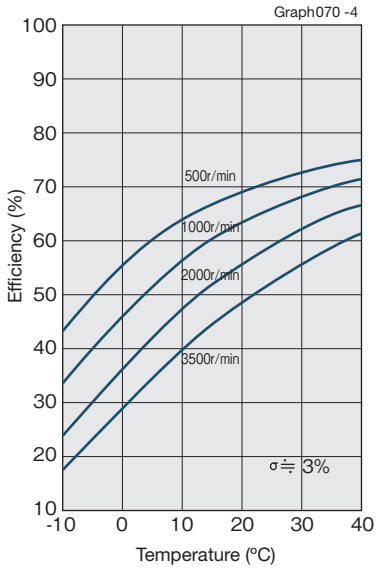

Model 17, 20, 25, 32, 40, 50

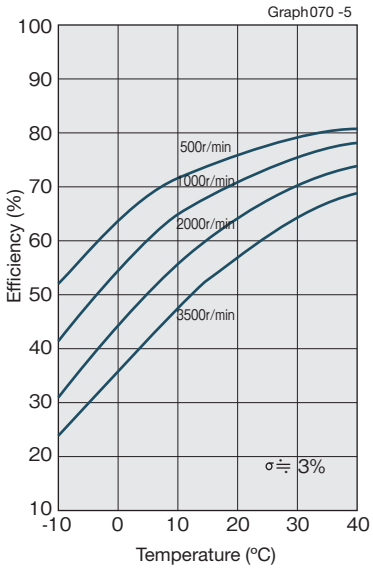

Reduction ratio 160

Model 20, 25, 32, 40, 50

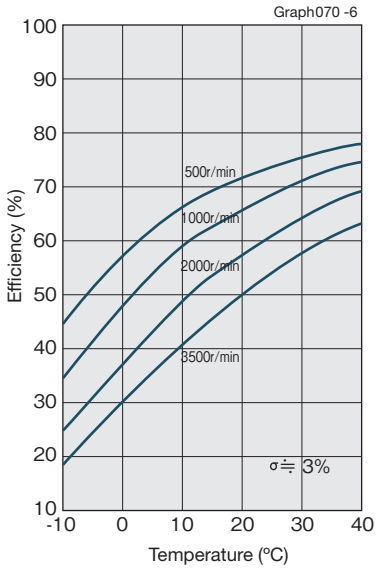

Design guide

Lubrication

■Grease lubrication

See “Engineering data” on Page 016 for details of the lubricant.

Recommended size for the inner wall of the case

Use the recommended size for the inner wall of the case of HarmonicDrive® so that grease does not fly away and remains inside HarmonicDrive® during operation. Contact us if you cannot secure the recommended size.

Recommended size for the inner wall of the case

Fig. 071-1

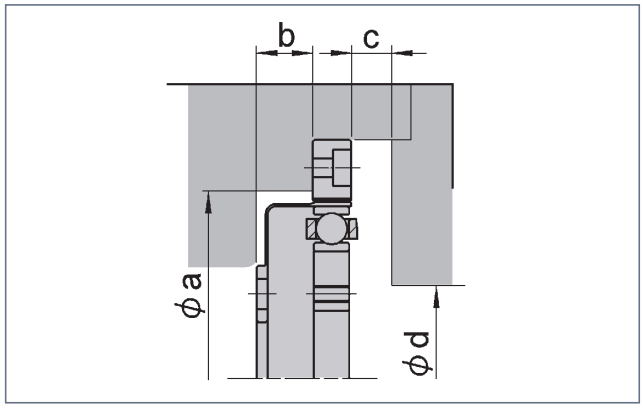

Recommended size for the inner wall of the case

Table 071-1
Unit: mm

Symbol \ Model	14	17	20	25	32	40	50
ϕa	38	45	53	66	86	106	133
b	6.5	7.5	8	10	13	16	19.5
c	1 (3)	1 (3)	1.5 (4.5)	1.5 (4.5)	2 (6)	2.5 (7.5)	3.5 (10.5)
$\phi d\ ^{+0.5}_{0}$	16	26	30	37	37	45	45

(Note) The value in parenthesis is the value when the wave generator facing upward.

Application guide

Application guide

Fig. 071-2

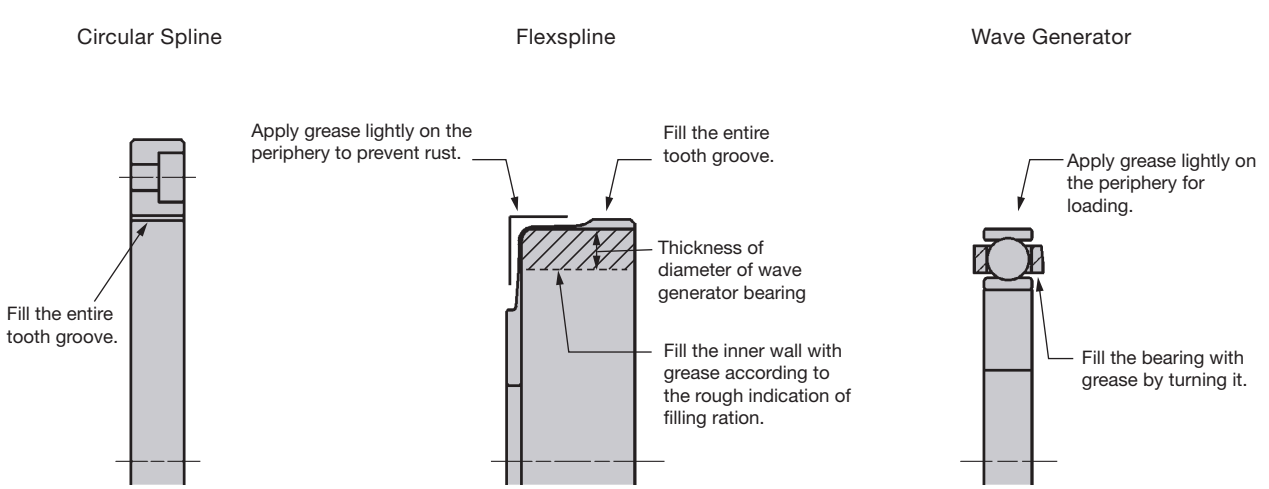

Application guide by usage

When the wave generator facing upward or downward, refer to CSF series (Figure 048-3 on Page 048) for application guide.

Application quantity

Table 071-2
Unit: g

Usage \ Model		14	17	20	25	32	40	50
Horizontal use		3.5	5.2	9	17	37	68	131
Vertical use	Output shaft facing upward	3.9	6	10	19	42	78	149
	Output shaft facing downward	4.6	7.1	12	22	48	88	175

When to replace grease

Abrasion of the sliding parts of HarmonicDrive® is influenced by grease performance. Grease performance changes by temperature and deteriorates rapidly as the temperature rises. Therefore, the grease needs to be replaced earlier than usual. Graph 072-1 indicates the time to replace the grease from the relation between the grease temperature and the total number of rotations when the average load torque is equal to or less than the rated torque. Obtain the time to replace the grease from the following calculation formula when the average load torque exceeds the rated torque.

Calculation formula when the average load torque exceeds the rated torque

Formula 072-1

$$L_{GT}=L_{GTn} \times \left(\frac{Tr}{T_{av}}\right)^3$$

Symbols of the calculation formula

Table 072-1

L_{GT}	Replacement timing if it is equal to rated torque or more	Number of rotation	————
L_{GTn}	Replacement timing if it is equal to rated torque or less	Number of rotation	See the right-hand graph.
Tr	Rated torque	N·m,kgf·m	See the "Rating table" on page 063.
T_{av}	Average load torque on the output side		Calculation formula: See Page 014.

When to replace grease: L_{GTn} (when the average load torque is equal to or less than the rated torque)

Graph 072-1

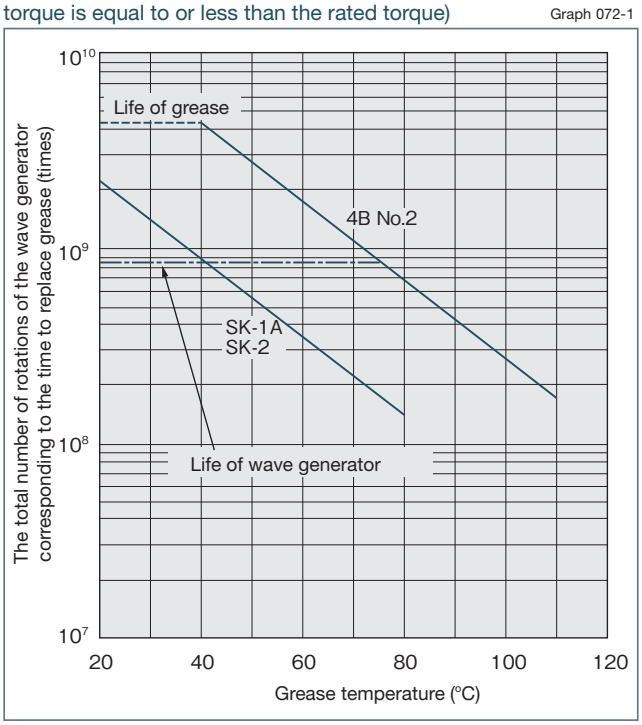

* Life of wave generator indicates the 10% of damage possibility.

■Other precautions

1. Avoid using it with other grease. HarmonicDrive® should be placed in an independent case to be built into the equipment.

2. When you use HarmonicDrive® with the wave generator facing upward (see Figure 050-2 on Page 050) at low-speed rotation (input rotational speed: 1000 r/min or less) and in one direction, you should contact our branch office as it may cause lubrication problems.

Installation precision

Unreasonable and abnormal installation that may deform the mounting surface may lower the performance depending on the installation design.
Pay attention to the following points and maintain the recommended precision of the installation cases shown in Table 073-1 and Figure 073-1 to make a design assuring no oil leakage.

- Warp and deformation on the mounting surface
- Blocking of foreign matter
- Problems caused by burrs, embossment and location around the tap area of the mounting hole
- Insufficient chamfering on the mounting faucet joint
- Insufficient roundness on the mounting faucet joint

Recommended precision for the built-in case

Fig. 073-1

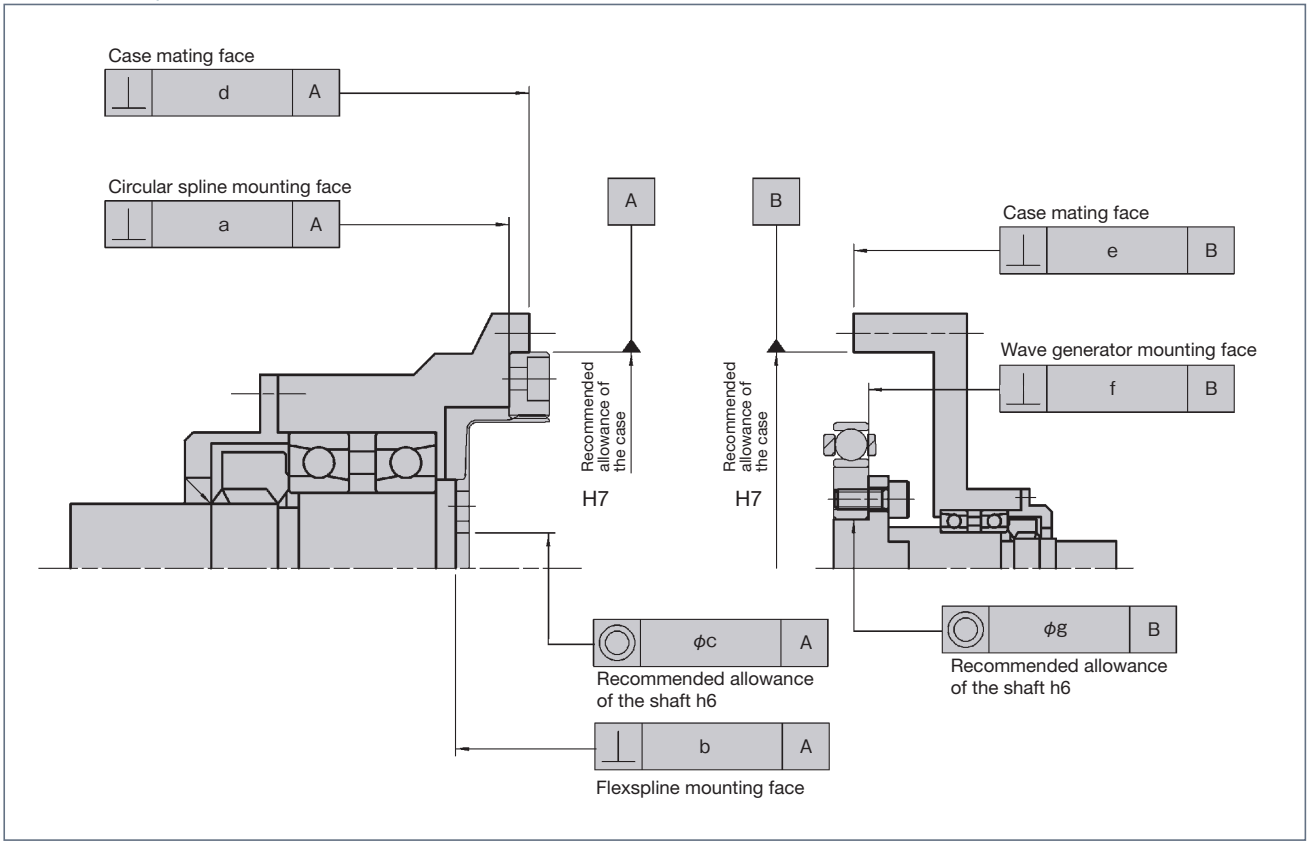

Recommended precision for the built-in case

Table 073-1
Unit: mm

Symbol \ Model	14	17	20	25	32	40	50
a	0.011	0.012	0.013	0.014	0.016	0.016	0.018
b	0.008	0.011	0.014	0.018	0.022	0.025	0.030
ϕc	0.015	0.018	0.019	0.022	0.022	0.024	0.030
d	0.011	0.015	0.017	0.024	0.026	0.026	0.028
e	0.011	0.015	0.017	0.024	0.026	0.026	0.028
f	0.008	0.010	0.010	0.012	0.012	0.012	0.015
ϕg	0.016	0.018	0.019	0.022	0.022	0.024	0.030

Sealing mechanism

The following sealing mechanism is required to prevent grease leakage and maintain the high durability of HarmonicDrive®.

- Rotating and sliding area ..... Oil seal (with a spring). Take care regarding flaws on the shaft.
- Flange mating face and mating ..... O-ring and seal agent. Take care regarding the distortion on the plane and how the O-ring is engaged.
- Screw hole area ..... Use a screw lock agent (Locktite 242 is recommended) or seal tape.

(Note) Observe the description above for the particular use of Harmonic grease® 4B No.2.

Installation of three parts of basic elements

■Installation of the wave generator

1. Thrust force of the wave generator and fixation of the shaft

Thrust force is applied on the wave generator during operation due to elastic deformation of the flexspline of HarmonicDrive®. The thrust force used as a reducer ((1), (2) and (3) on Page 010) works in the diaphragm direction of the flexspline (Figure 074-1), while the thrust force used as an overdrive ((4), (5) and (6) on Page 010) works in the opposite direction (Figure 074-1).
You can obtain the thrust force (maximum value) of the wave generator with the following calculation formula. Thrust force varies depending on the operating condition. It tends to increase and shows almost the same value as that obtained by the calculation formula when the torque is high, when the speed is very low and when the rotation is constant and continuous. Work out a design to eliminate the thrust force of the wave generator in either case.

(Note) Contact us when you fix the wave generator hub and the input shaft with a retaining screw.

Shapes and sizes of the wave generator — Fig. 074-1

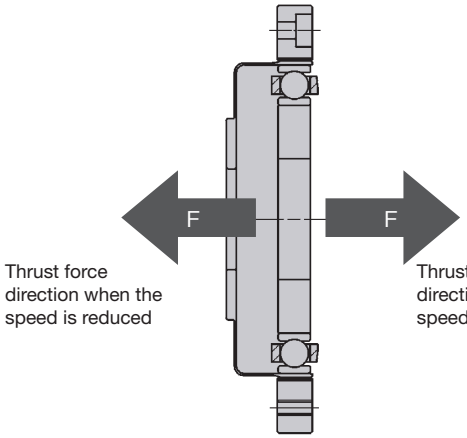

Calculation formula of thrust force — Table 074-1

Reduction ratio	Calculation formula
50	$F=2\times\frac{T}{D}\times0.07\times\tan 30°+2\mu PF$
80 or more	$F=2\times\frac{T}{D}\times0.07\times\tan 20°+2\mu PF$

Symbols of the calculation formula — Table 074-2

F	Thrust force	N	See Fig. 074-1.
D	(Model) ×0.00254	m	
T	Output torque	N·m	
2μPF	Thrust force by bearing reaction force	N	See Table 074-3.

Thrust force by bearing reaction force — Table 074-3

Model Name	Model Number	2μPF (N)
CSD	14	2.1
	17	4.1
	20	5.6
	25	9.8
	32	16
	40	24
	50	39

Example of calculation — Formula 074-1

Model name : CSD
Model number : 32
Reduction ratio: i=50
Output torque : 268 N·m (max. permissible momentary torque)

$$F=2\times\frac{268}{(32\times0.00254)}\times0.07\times\tan30°+16$$

$$F=266.5N$$

■Installing the flexspline

1. Precautions on installation

We recommend that you install the flexspline directly with bolts. If you use a mounting flange or washer inside the flexspline, the mounting bolt may make contact with the wave generator and damage it when it is installed. Therefore, strictly observe installation of the flexspline with bolts.
Note that the head of the bolt should not exceed the boss diameter (ϕJ) of the flexspline as shown in Figure 075-1. Otherwise, the diaphragm may be damaged.

Installing the flexspline

Fig. 075-1

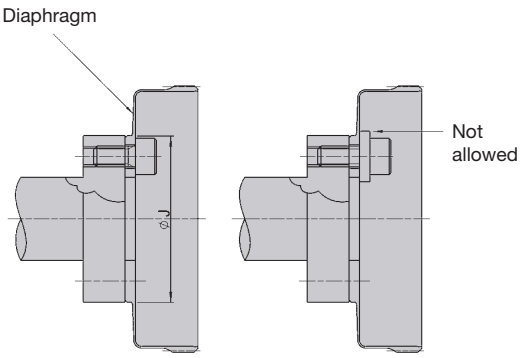

Warning: The head of the bolt should not exceed Dimension J.

Boss diameter of the flexspline

Table 075-1
Unit: mm

Symbol \ Model	14	17	20	25	32	40	50
ϕJ	23	27.2	32	40	52	64	80

2. Bolt tightening of the flexspline

The flexspline should be tightened with bolts. As the transmission torque on the tightening area varies depending on the following conditions, design and part control corresponding to the load condition should be conducted.

- Intensity of the selected bolt
- Tightening of bolts and the tightening torque
- Surface condition of bolts and female screws
- Friction coefficient of the contact surface

Installation with bolts

Table 075-2

		Standard							BB (in case boss hole of flexspline is max. value.)				
Item \ Model		14	17	20	25	32	40	50	20	25	32	40	50
Number of bolts		9	8	9	9	11	10	11	12	12	14	14	14
Bolt size		M3	M4	M4	M5	M6	M8	M10	M3	M4	M5	M6	M8
Installation of bolts: P.C.D.	mm	17	19.5	24	30	41	48	62	26	32	42	52	65
Bolt tightening torque	N·m	2.0	4.5	4.5	9.0	15.3	37	74	2.0	4.5	9.0	15.3	37
	kgf·m	0.20	0.46	0.46	0.92	1.56	3.8	7.5	0.20	0.46	0.92	1.56	3.8
Bolt transmis-sion torque	N·m	32	55	76	152	359	694	1577	65	135	331	580	1315
	kgf·m	3.3	5.6	7.7	16	37	71	161	6.6	14	34	59	134

(Table 075-2/Notes)
1. It is assumed that the material of the female screws can endure the bolt tightening torque.
2. Recommended bolt Bolt name: JIS B 1176 hexagonal bolt Intensity type: JIS B 1051 12.9 or more
3. Torque efficiency: K=0.2
4. Tightening efficiency: A=1.4
5. Tightening friction coefficient μ=0.15
6. As the bolt transmission torque is smaller than that of the standard products in the BB specification, the maximum permissible momentary torque is restricted (see “Ratings” on Page 063).

Numbers of holes and hole positions of bolts

Fig. 076-1

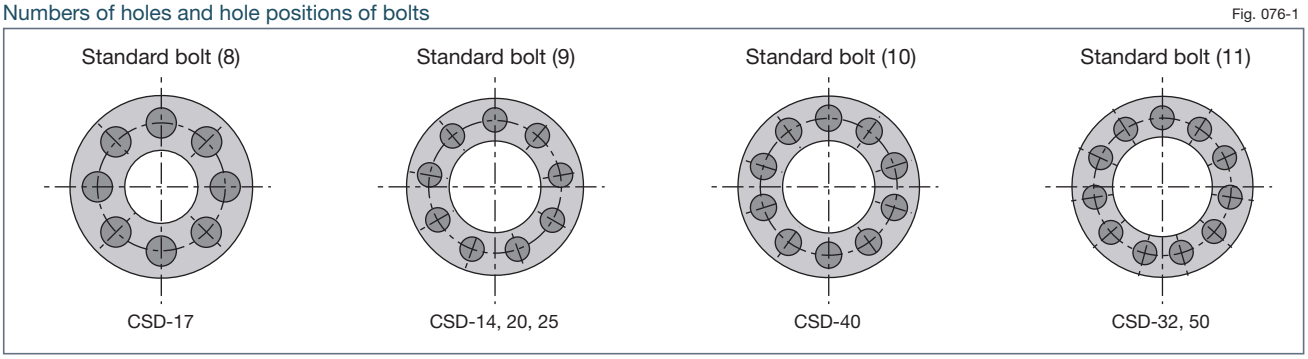

Numbers of holes and hole positions of BB specification

Fig. 076-2

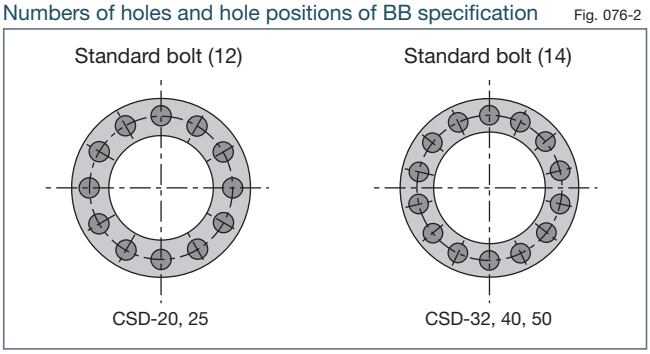

■Installation of the circular spline

Perform design and part control corresponding to the load condition for installation of the circular spline in the same way as the flexspline. Transmission torques by the recommended bolts and tightening torque are shown in Table 077-1. When the transmission torque is smaller than the load torque, the additional use of pins and bolts should be reviewed. Perform installation to meet the requirements of each series.

Installation with bolts

Table 077-1

Item \ Model		14	17	20	25	32	40	50
Number of bolts		6	8	12	12	12	12	12
Bolt size		M3	M3	M3	M3	M4	M5	M6
Installation of bolts: P.C.D.	mm	44	54	62	75	100	120	150
Bolt tightening torque	N·m	2.0	2.0	2.0	2.0	4.5	9.0	15.3
	kgf·m	0.20	0.20	0.20	0.20	0.46	0.92	1.56
Bolt transmission torque	N·m	55	90	155	188	422	810	1434
	kgf·m	5.6	9.2	16	19	43	83	146

(Table 077-1/Notes)
1. It is assumed that the material of the female screws can endure the bolt tightening torque.
2. Recommended bolt Bolt name: JIS B 1176 hexagonal bolt Intensity type: JIS B 1051 12.9 or more
3. Torque efficiency: K=0.2
4. Tightening efficiency: A=1.4
5. Tightening friction coefficient μ=0.15

■Order of installing of three parts of basic elements

Install the wave generator after setting the circular spline and the flexspline on the equipment. Installing the generator in other ways may cause a “dedoi-dal” condition (see Page 029) and damage the tooth plane. Take extra care.

Order of appropriate installing three parts

Fig. 077-1

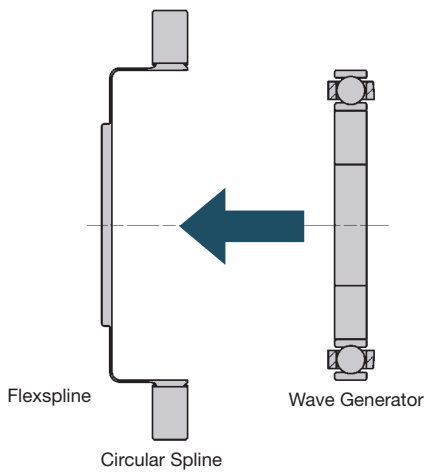

■Precautions on assembly

HarmonicDrive® may generate vibration and abnormal sound due to problems during assembly. Perform assembly based on the following precautions.

Precautions on the wave generator

1. Avoid such assembly where excessive force is applied to the wave generator bearing. You can smoothly insert the wave generator by turning it.
2. It should be noted that the effect of misalignment and falling shall be within the recommended value (see “Installation precision” on Page 073) as the wave generator of the CSD series does not have Oldham’s coupling mechanism (self-aligning mechanism).
3. Install so that the mounting bolts of the wave generator do not interfere with those of the flexspline.

Precautions on the circular spline

1. Is flatness of the mounting surface poor or distorted?
2. Is any embossment of the screw hole area, burr or trapped foreign matter found?
3. Have chamfering and relief working of the corner been conducted to prevent interference of the corner of the circular spline in the house built-in area?
4. Can the circular spline rotate built in the house? Does it interfere with or catch on any part?
5. Does any bolt inserted into the mounting bolt hole interfere with the circular spline and rotate irregularly due to the bolt hole being misaligned or oblique?
6. Do not tighten the bolts with the specified torque all at once. Tighten the bolts temporarily with about half the specified torque, and then tighten them with the specified torque. Tighten them in an even, crisscross pattern.
7. Avoid pinning the circular spline if possible as it may reduce the rotational precision.

Precautions on the flexspline

1. Is flatness of the mounting surface poor or distorted?
2. Is any embossment of the screw hole area, burr or trapped foreign matter found?
3. Have chamfering and relief working of the corner been conducted to prevent the interference of the corner of the flexspline in the house built-in area?
4. Does any bolt inserted into the mounting bolt hole interfere with the circular spline and rotate irregularly due to the bolt hole being misaligned or oblique?
5. Do not tighten the bolts with the specified torque all at once. Tighten the bolts temporarily with about half the specified torque, and then tighten them with the specified torque. Tighten them in an even, crisscross pattern.
6. Does it engage with the circular spline in an extremely unbalanced way when it is combined? If it is unbalanced, they could be misaligned or not upright.
7. Avoid hitting the tip of the teeth on the opening and inserting the circular spline with excessive force in assembling it

On anti-rust provision

The surface of CSD series is not anti-rust treated. Apply anti-rust agent to the surface if required. Contact us if you would like us to provide the surface with anti-rust treatment.

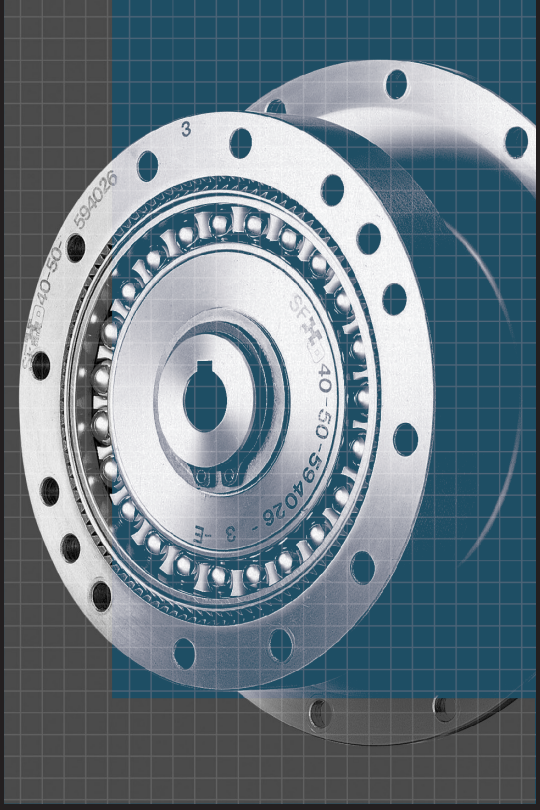

SHG/SHF Series

Component Type SHG/SHF

Features

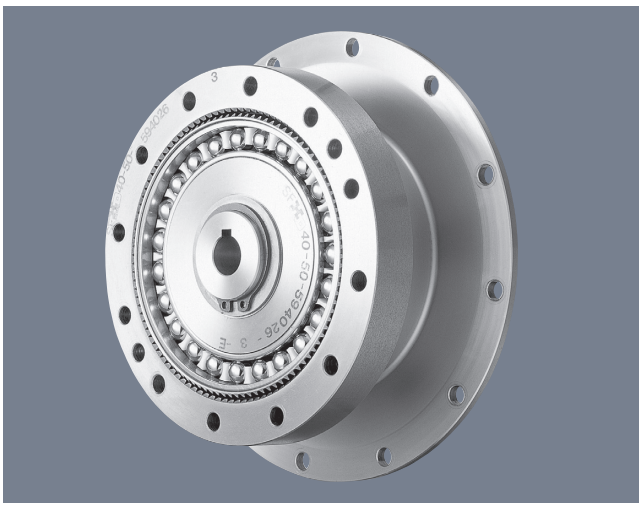

■SHG/SHF series component type

The SHG/SHF series component type is an advanced series based on the CSG/CSF series, and the basic performance of both series is the same. The major difference between these series is the shape of the flexspline. The flexspline of the SHG/SHF series component type has a shape that opens outward to make the central part hollow.
The SHG/SHF component type consists of only three basic parts. The type directly built in the machine and the equipment enhance the degree of freedom in design.

Features of SHG/SHF series

- ■Large bore with hollow hole, flat shape
- ■Compact and simple design
- ■High torque capacity
- ■High stiffness
- ■Non-backlash
- ■High positioning and rotational accuracies
- ■Coaxial input and output

New variations

SHG series: for high torque
- •Torque capacity has been improved by 30% compared to the SHF series.
- •The life has been improved by 43% (10,000 hours) compared to the SHF series.

Reduction ratio of 30: for high-speed
- •A reduction ratio of 30 has been achieved, keeping the merits of non-backlash HarmonicDrive®.

Structure of SHG/SHF series component type

Fig. 080-1

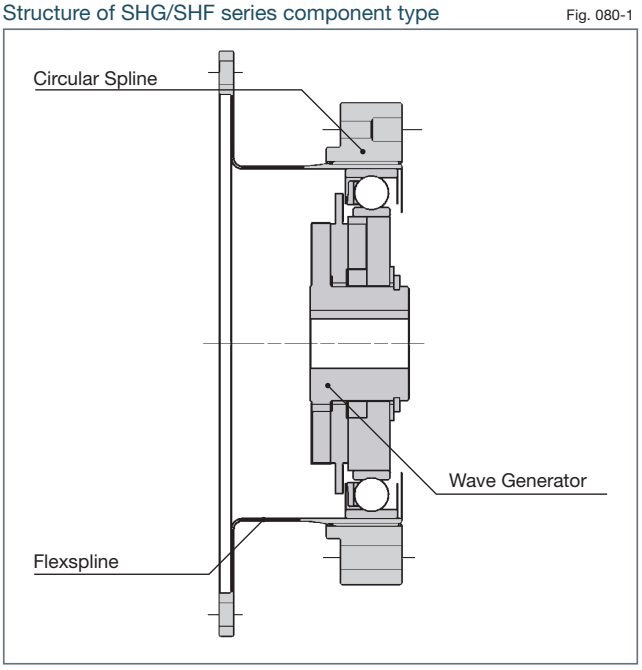

Comparison between SHG series and SHF series

Graph 080-1

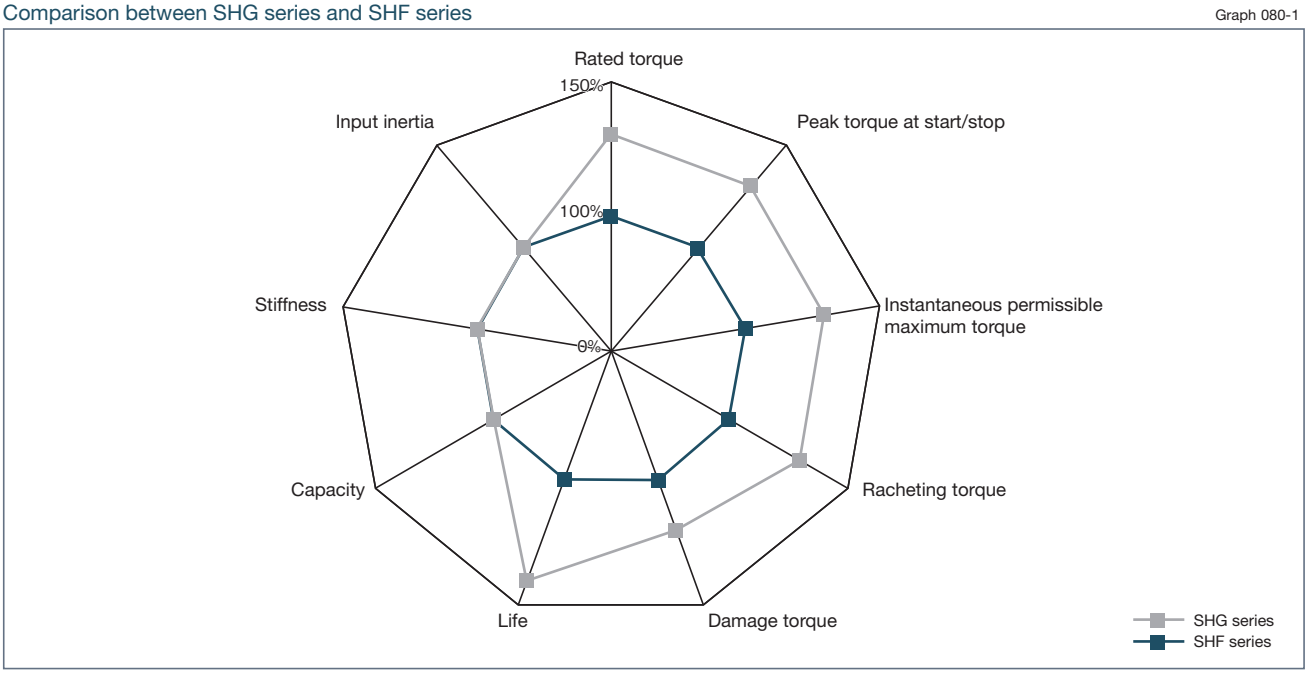

Model and Symbol

SHG - 25 - 100 - 2A - GR - SP

Table 081-1

Model name	Model No.	Reduction ratio*					Model	Special specification
SHG	14	50	80	100	—	—	2A-GR=Component type (2A-R for Model No. 14, 17)	SP=Special specifications such as shapes and performance None=Standard product
	17	50	80	100	120	—		
	20	50	80	100	120	160		
	25	50	80	100	120	160		
	32	50	80	100	120	160		
	40	50	80	100	120	160		
	45	50	80	100	120	160		
	50	—	80	100	120	160		
	58	—	80	100	120	160		
	65	—	80	100	120	160		

* The reduction ratio indicates the value for the following condition.
Input: wave generator, fixed: circular spline, output: flexspline

SHF - 25 - 100 - 2A - GR - SP

Table 081-2

Model name	Model No.	Reduction ratio*						Model	Special specification
SHF	14	30	50	80	100	—	—	2A-GR=Component type (2A-R for Model No. 14, 17)	SP=Special specifications such as shapes and performance None=Standard product
	17	30	50	80	100	120	—		
	20	30	50	80	100	120	160		
	25	30	50	80	100	120	160		
	32	30	50	80	100	120	160		
	40	—	50	80	100	120	160		
	45	—	50	80	100	120	160		
	50	—	50	80	100	120	160		
	58	—	50	80	100	120	160		

* The reduction ratio indicates the value for the following condition.
Input: wave generator, fixed: circular spline, output: flexspline

Technical data

Rating table

SHG series

Table082 -1

Model	Reduction ratio	Rated torque at input 2000r/min		Peak torque at start/stop		Permissible max. value of ave. load torque		Instantaneous permissible max. torque		Permissible max. input rotational speed (r/min)		Permissible ave. input rotational speed (r/min)		Inertia moment	
		N·m	kgf·m	N·m	kgf·m	N·m	kgf·m	N·m	kgf·m	Oil lubricant	Grease lubricant	Oil lubricant	Grease lubricant	I $\times10^{-4}$kg·m^2	J $\times10^{-5}$kgf·ms^2
14	50	7.0	0.7	23	2.3	9	0.9	46	4.7	14000	8500	6500	3500	0.033	0.034
	80	10	1.0	30	3.1	14	1.4	61	6.2						
	100	10	1.0	36	3.7	14	1.4	70	7.2						
17	50	21	2.1	44	4.5	34	3.4	91	9	10000	7300	6500	3500	0.079	0.081
	80	29	2.9	56	5.7	35	3.6	113	12						
	100	31	3.2	70	7.2	51	5.2	143	15						
	120	31	3.2	70	7.2	51	5.2	112	11						
20	50	33	3.3	73	7.4	44	4.5	127	13	10000	6500	6500	3500	0.193	0.197
	80	44	4.5	96	9.8	61	6.2	165	17						
	100	52	5.3	107	10.9	64	6.5	191	20						
	120	52	5.3	113	11.5	64	6.5	191	20						
	160	52	5.3	120	12.2	64	6.5	191	20						
25	50	51	5.2	127	13	72	7.3	242	25	7500	5600	5600	3500	0.413	0.421
	80	82	8.4	178	18	113	12	332	34						
	100	87	8.9	204	21	140	14	369	38						
	120	87	8.9	217	22	140	14	395	40						
	160	87	8.9	229	23	140	14	408	42						
32	50	99	10	281	29	140	14	497	51	7000	4800	4600	3000	1.69	1.72
	80	153	16	395	40	217	22	738	75						
	100	178	18	433	44	281	29	841	86						
	120	178	18	459	47	281	29	892	91						
	160	178	18	484	49	281	29	892	91						
40	50	178	18	523	53	255	26	892	91	5600	4000	3600	3000	4.50	4.59
	80	268	27	675	69	369	38	1270	130						
	100	345	35	738	75	484	49	1400	143						
	120	382	39	802	82	586	60	1530	156						
	160	382	39	841	86	586	60	1530	156						
45	50	229	23	650	66	345	35	1235	126	5000	3800	3300	3000	8.68	8.86
	80	407	41	918	94	507	52	1651	168						
	100	459	47	982	100	650	66	2041	208						
	120	523	53	1070	109	806	82	2288	233						
	160	523	53	1147	117	819	84	2483	253						
50	80	484	49	1223	125	675	69	2418	247	4500	3500	3000	2500	12.5	12.8
	100	611	62	1274	130	866	88	2678	273						
	120	688	70	1404	143	1057	108	2678	273						
	160	688	70	1534	156	1096	112	3185	325						
58	80	714	73	1924	196	1001	102	3185	325	4000	3000	2700	2200	27.3	27.9
	100	905	92	2067	211	1378	141	4134	422						
	120	969	99	2236	228	1547	158	4329	441						
	160	969	99	2392	244	1573	160	4459	455						
65	80	969	99	2743	280	1352	138	4836	493	3500	2800	2400	1900	46.5	47.8
	100	1236	126	2990	305	1976	202	6175	630						
	120	1236	126	3263	333	2041	208	6175	630						
	160	1236	126	3419	349	2041	208	6175	630						

(Note) 1. Oil lubrication is standard for component-type models whose model number is 50 or more with a reduction ratio of 50. Use grease lubrication within half the rated torque.
2. Inertia moment: $I=\frac{1}{4}GD^2$
3. See “Engineering data” on Page 012 for details of the terms.
4. When the maximum permissible momentary torque is expected to be applied, see “Bolt tightening of the flexspline” of each series.

SHF series

Table 083-1

Model	Reduction ratio	Rated torque at input 2000r/min		Peak torque at start/stop		Permissible max. value of ave. load torque		Instantaneous permissible max. torque		Permissible max. input rotational speed (r/min)		Permissible ave. input rotational speed (r/min)		Inertia moment	
		N·m	kgf·m	N·m	kgf·m	N·m	kgf·m	N·m	kgf·m	Oil lubricant	Grease lubricant	Oil lubricant	Grease lubricant	I $\times10^{-4}$kg·m^2	J $\times10^{-5}$kgf·ms^2
14	30	4.0	0.41	9.0	0.92	6.8	0.69	17	1.7	14000	8500	6500	3500	0.033	0.034
	50	5.4	0.55	18	1.8	6.9	0.70	35	3.6						
	80	7.8	0.80	23	2.4	11	1.1	47	4.8						
	100	7.8	0.80	28	2.9	11	1.1	54	5.5						
17	30	8.8	0.90	16	1.6	12	1.2	30	3.1	10000	7300	6500	3500	0.079	0.081
	50	16	1.6	34	3.5	26	2.6	70	7.1						
	80	22	2.2	43	4.4	27	2.7	87	8.9						
	100	24	2.4	54	5.5	39	4.0	110	11						
	120	24	2.4	54	5.5	39	4.0	86	8.8						
20	30	15	1.5	27	2.8	20	2.0	50	5.1	10000	6500	6500	3500	0.193	0.197
	50	25	2.5	56	5.7	34	3.5	98	10						
	80	34	3.5	74	7.5	47	4.8	127	13						
	100	40	4.1	82	8.4	49	5.0	147	15						
	120	40	4.1	87	8.9	49	5.0	147	15						
	160	40	4.1	92	9.4	49	5.0	147	15						
25	30	27	2.8	50	5.1	38	3.9	95	9.7	7500	5600	5600	3500	0.413	0.421
	50	39	4.0	98	10	55	5.6	186	19						
	80	63	6.4	137	14	87	8.9	255	26						
	100	67	6.8	157	16	108	11	284	29						
	120	67	6.8	167	17	108	11	304	31						
	160	67	6.8	176	18	108	11	314	32						
32	30	54	5.5	100	10	75	7.7	200	20	7000	4800	4600	3500	1.69	1.72
	50	76	7.8	216	22	108	11	382	39						
	80	118	12	304	31	167	17	568	58						
	100	137	14	333	34	216	22	647	66						
	120	137	14	353	36	216	22	686	70						
	160	137	14	372	38	216	22	686	70						
40	50	137	14	402	41	196	20	686	70	5600	4000	3600	3000	4.50	4.59
	80	206	21	519	53	284	29	980	100						
	100	265	27	568	58	372	38	1080	110						
	120	294	30	617	63	451	46	1180	120						
	160	294	30	647	66	451	46	1180	120						
45	50	176	18	500	51	265	27	950	97	5000	3800	3300	3000	8.68	8.86
	80	313	32	706	72	390	40	1270	130						
	100	353	36	755	77	500	51	1570	160						
	120	402	41	823	84	620	63	1760	180						
	160	402	41	882	90	630	64	1910	195						
50	50	245	25	715	73	350	36	1430	146	4500	3500	3000	2500	12.5	12.8
	80	372	38	941	96	519	53	1860	190						
	100	470	48	980	100	666	68	2060	210						
	120	529	54	1080	110	813	83	2060	210						
	160	529	54	1180	120	843	86	2450	250						
58	50	353	36	1020	104	520	53	1960	200	4000	3000	2700	2200	27.3	27.9
	80	549	56	1480	151	770	79	2450	250						
	100	696	71	1590	162	1060	108	3180	325						
	120	745	76	1720	176	1190	121	3330	340						
	160	745	76	1840	188	1210	123	3430	350						

(Note) 1. Oil lubrication is standard for component-type models whose model number is 50 or more with a reduction ratio of 50. Use grease lubrication within half the rated torque.
2. Inertia moment: $I=\frac{1}{4}GD^2$
3. See “Engineering data” on Page 012 for details of the terms.
4. When the maximum permissible momentary torque is expected to be applied, see “Bolt tightening of the flexspline” of each series.

Outline drawing

You can download the CAD data (DXF) of this product from the following homepage.
URL: https://www.hds.co.jp/

Fig. 084-1

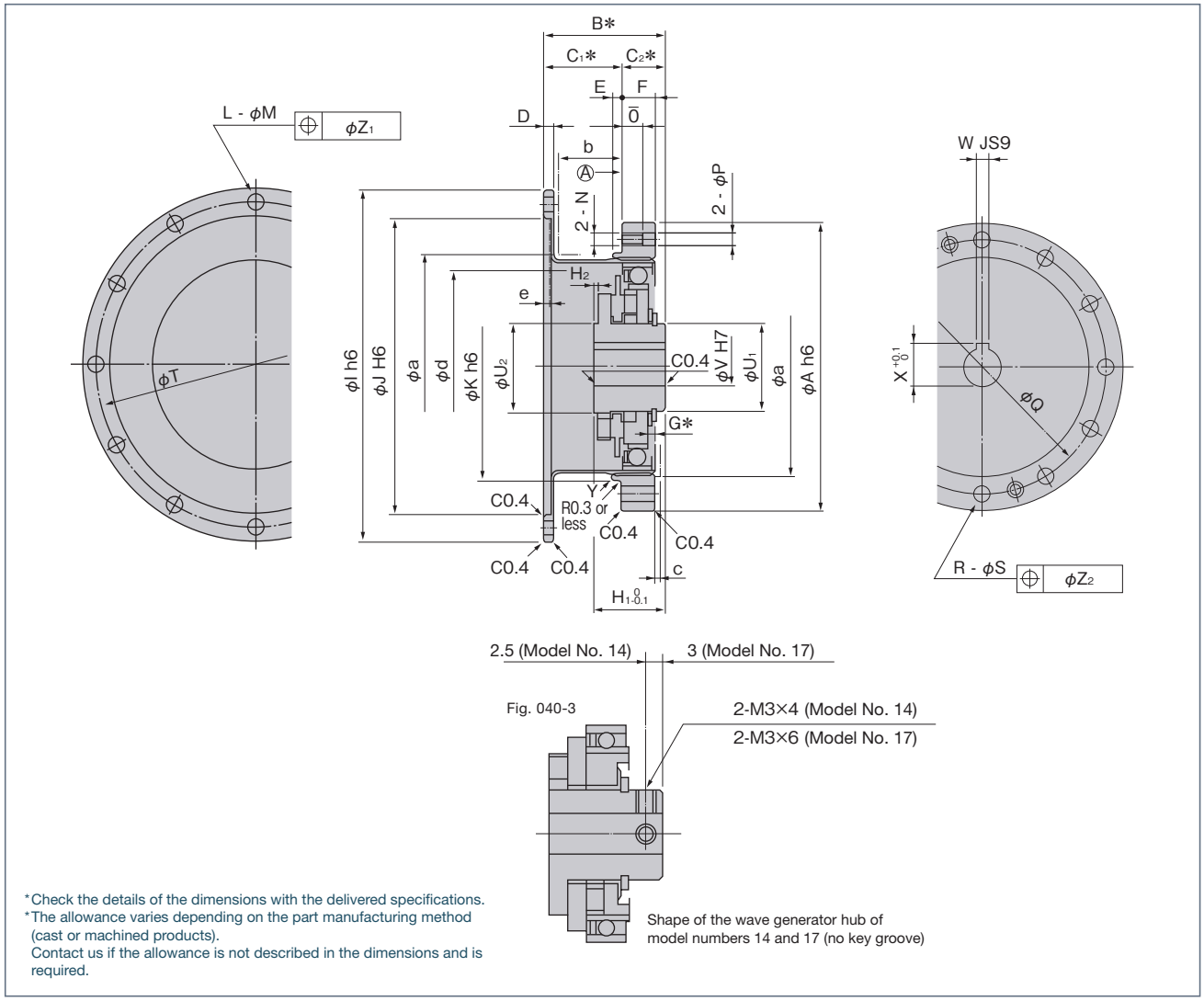

*Check the details of the dimensions with the delivered specifications.
*The allowance varies depending on the part manufacturing method (cast or machined products).
Contact us if the allowance is not described in the dimensions and is required.

■Shape of the wave generator

The wave generator is Oldham's coupling structure.

Fig. 084-2

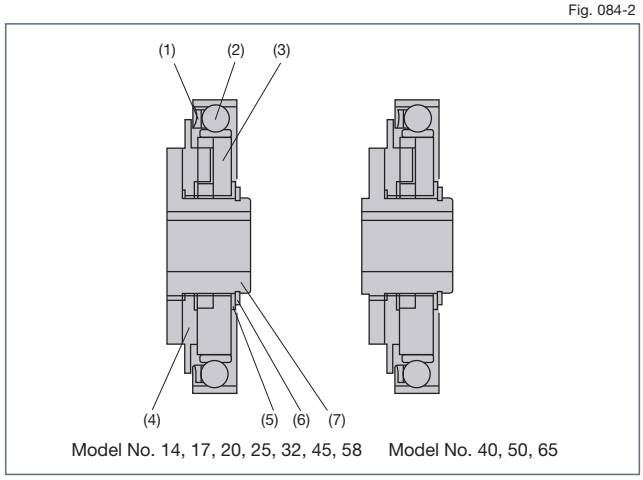

(1) Retainer
(2) Wave generator bearing
(3) Wave generator plug
(4) Insert
(5) Rub washer (unclear)
(6) C-type retaining ring
(7) Wave generator hub

The appearance of the retainer of the SHG series differs from that of the SHF series. (Note that model numbers 14 and 17 of the SHG series are the same as those of the SHF series.)

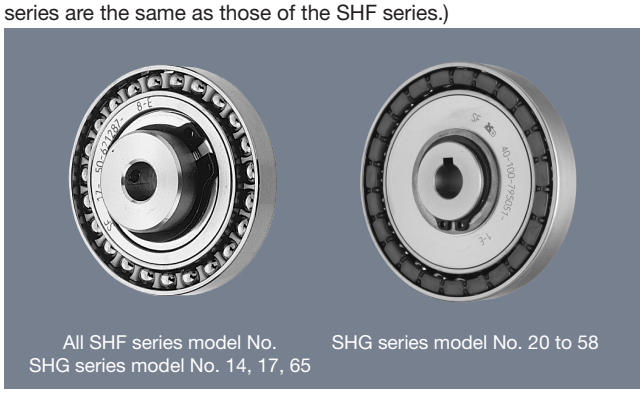

Measurement table

Table 085-1
Unit: mm

Symbol \ Model		14	17	20	25	32	40	45	50	58	65
ϕA h6		50	60	70	85	110	135	155	170	195	215
B*	SHG Series	$28.5^{0}_{-0.4}$	$32.5^{0}_{-0.4}$	$33.5^{0}_{-0.4}$	$37^{0}_{-0.5}$	$44^{0}_{-0.6}$	$53^{0}_{-0.6}$	$58.5^{0}_{-0.6}$	$64^{0}_{-0.7}$	$75.5^{0}_{-0.7}$	$83^{0}_{-0.7}$
	SHF Series	$28.5^{0}_{-0.8}$	$32.5^{0}_{-0.9}$	$33.5^{0}_{-1.0}$	$37^{0}_{-1.0}$	$44^{0}_{-1.1}$	$53^{0}_{-1.1}$	$58.5^{0}_{-1.2}$	$64^{0}_{-1.3}$	$75.5^{0}_{-1.3}$	—
C_1*		$17.5^{+0.4}_{0}$	$20^{+0.5}_{0}$	$21.5^{+0.8}_{0}$	$24^{+0.8}_{0}$	$28^{+0.8}_{0}$	$34^{+0.6}_{0}$	$38^{+0.6}_{0}$	$41^{+0.6}_{0}$	$48^{+0.6}_{0}$	$52.5^{+0.6}_{0}$
C_2*		11	12.5	12	13	16	19	20.5	23	27.5	30.5
D		2.4	3	3	3.3	3.6	4	4.5	5	5.8	6.5
E		2	2.5	3	3	3	4	4	4	5	5
F		6	6.5	7.5	10	14	17	19	22	25	29
G*	SHG Series	1.4	1.6	1.5	3.5	4.2	5.6	6.3	7	8.2	9.5
	SHF Series	0.4	0.3	0.1	2.1	2.5	3.3	3.7	4.2	4.8	—
H_1	SHG Series	$18.5^{0}_{-0.1}$	$20.7^{0}_{-0.1}$	$21.5^{0}_{-0.1}$	$21.6^{0}_{-0.1}$	$23.6^{0}_{-0.1}$	$29.7^{0}_{-0.1}$	$30.5^{0}_{-0.1}$	$34.8^{0}_{-0.1}$	$38.3^{0}_{-0.1}$	$44.6^{0}_{-0.1}$
	SHF Series	$17.6^{0}_{-0.1}$	$19.5^{0}_{-0.1}$	$20.1^{0}_{-0.1}$	$20.2^{0}_{-0.1}$	$22^{0}_{-0.1}$	$27.5^{0}_{-0.1}$	$27.9^{0}_{-0.1}$	$32^{0}_{-0.1}$	$34.9^{0}_{-0.1}$	—
H_2		—	—	—	—	—	0.4	—	0.8	—	2.2
ϕI h6	SHG Series	60	72	82	104	134	164	190	214	240	276
	SHF Series	60	72	82	104	134	164	182	205	233	—
ϕJ H6		48	60	70	88	114	140	158	175	203	232
ϕK h6	Other than R.R. of 30	38	48	54	67	90	110	124	135	156	177
	Reduction ratio of 30	38	48	55	68	90	—	—	—	—	—
L		8	12	12	12	12	12	18	12	16	16
ϕM		3.5	3.4	3.5	4.5	5.5	6.6	6.6	9	9	11
N		M3	M3	M3	M4	M5	M6	M8	M8	M10	M10
O		6	6.5	4	6	7	9	12	13	15	15
ϕP		—	—	3.5	4.5	5.5	6.6	9	9	11	11
ϕQ		44	54	62	75	100	120	140	150	175	195
R	SHG Series	8	16	16	16	16	16	16	16	16	16
	SHF Series	6	12	12	12	12	12	12	12	12	—
ϕS		3.5	3.5	3.5	4.5	5.5	6.6	9	9	11	11
ϕT	SHG Series	54	66	76	96	124	152	180	200	226	258
	SHF Series	54	66	76	96	124	152	170	190	218	—
ϕU_1		14	18	21	26	26	32	32	32	40	48
ϕU_2		—	—	—	—	—	32	—	32	—	48
ϕV	Standard (H7)	6	8	9	11	14	14	19	19	22	24
	Max. size	8	10	13	15	16	20	20	20	25	30
WJs9		—	—	3	4	5	5	6	6	6	8
X		—	—	$10.4^{+0.1}_{0}$	$12.8^{+0.1}_{0}$	$16.3^{+0.1}_{0}$	$16.3^{+0.1}_{0}$	$21.8^{+0.1}_{0}$	$21.8^{+0.1}_{0}$	$24.8^{+0.1}_{0}$	$27.3^{+0.2}_{0}$
Y		C0.3	C0.4	C0.4	C0.4	C0.4	C0.4	C0.4	C0.8	C0.8	C0.8
ϕZ_1		0.25	0.20	0.25	0.25	0.25	0.3	0.3	0.5	0.5	0.5
ϕZ_2		0.25	0.25	0.25	0.25	0.25	0.3	0.5	0.5	0.5	0.5
Inner wall of the case	ϕa	38	45	53	66	86	106	119	133	154	172
	b	14.6	16.4	17.8	19.8	23.2	28.6	31.9	34.2	40.1	43
	c	1	1	1.5	1.5	1.5	2	2	2	2.5	2.5
	ϕd	31	38	45	56	73	90	101	113	131	150
	e	1.7	2.1	2.0	2.0	2.0	2.0	2.3	2.5	2.9	3.5
Mass (kg)		0.11	0.18	0.31	0.48	0.97	1.87	2.64	3.53	5.17	7.04

- The clamp face of the circular spline is Face (A) in the drawing. Fit this face to install it on the case.
- You can change and add the following sizes.

Wave Generator	: V size
Flexspline	: L and M size
Circular Spline	: R and S size

- Since some dimensions and shape are different between SHF series and SHG series, be careful for installation and mounting.
- The B, C_1, C_2 and G sizes indicated by an asterisk are the mounting positions in the shaft direction and allowance of the three parts (wave generator, flexspline, circular spline) comprising HarmonicDrive®. Strictly observe these sizes as they affect the performance and intensity.
- As the flexspline is subject to elastic deformation, the inner wall should be ϕa, b, c or more, and it does not exceed ϕd and e to prevent possible contact with the case.
- Three parts (wave generator, flexspline, circular spline) are not built in when the product is delivered.

Angle transmission accuracy

See "Engineering data" for a description of terms.

Table 086-1

Reduction ratio	Specification \ Model		14	17	20	25	32	40 to 65
30	Standard product	$\times10^{-4}$rad	5.8	4.4	4.4	4.4	4.4	—
		arc-min	2	1.5	1.5	1.5	1.5	—
	Special product	$\times10^{-4}$rad	—	—	2.9	2.9	2.9	—
		arc-min	—	—	1	1	1	—
50 or more	Standard product	$\times10^{-4}$rad	4.4	4.4	2.9	2.9	2.9	2.9
		arc-min	1.5	1.5	1	1	1	1
	Special product	$\times10^{-4}$rad	2.9	2.9	1.5	1.5	1.5	1.5
		arc-min	1	1	0.5	0.5	0.5	0.5

Hysteresis loss

See "Engineering data" for a description of terms.

Table 086-2

Reduction ratio	Unit \ Model	14	17	20	25	32	40 or more
30	$\times10^{-4}$rad	8.7	8.7	8.7	8.7	8.7	—
	arc-min	3.0	3.0	3.0	3.0	3.0	—
50	$\times10^{-4}$rad	5.8	5.8	5.8	5.8	5.8	5.8
	arc-min	2.0	2.0	2.0	2.0	2.0	2.0
80 or more	$\times10^{-4}$rad	2.9	2.9	2.9	2.9	2.9	2.9
	arc-min	1.0	1.0	1.0	1.0	1.0	1.0

Max. backlash quantity

See "Engineering data" for a description of terms.

Table 086-3

Reduction ratio \ Model		14	17	20	25	32	40	45	50	58	65
30	$\times10^{-5}$rad	29.1	16.0	13.6	13.6	11.2	—	—	—	—	—
	arc-sec	60	33	28	28	23	—	—	—	—	—
50	$\times10^{-5}$rad	17.5	9.7	8.2	8.2	6.8	6.8	5.8	5.8	4.8	—
	arc-sec	36	20	17	17	14	14	12	12	10	—
80	$\times10^{-5}$rad	11.2	6.3	5.3	5.3	4.4	4.4	3.9	3.9	2.9	2.9
	arc-sec	23	13	11	11	9	9	8	8	6	6
100	$\times10^{-5}$rad	8.7	4.8	4.4	4.4	3.4	3.4	2.9	2.9	2.4	2.4
	arc-sec	18	10	9	9	7	7	6	6	5	5
120	$\times10^{-5}$rad	—	3.9	3.9	3.9	2.9	2.9	2.4	2.4	1.9	1.9
	arc-sec	—	8	8	8	6	6	5	5	4	4
160	$\times10^{-5}$rad	—	—	2.9	2.9	2.4	2.4	1.9	1.9	1.5	1.5
	arc-sec	—	—	6	6	5	5	4	4	3	3

Rigidity (Spring constant)

See "Engineering data" for a description of terms.

Table 086-4

Symbol \ Model			14	17	20	25	32	40	45	50	58	65
T_1		N·m	2.0	3.9	7.0	14	29	54	76	108	168	235
		kgf·m	0.2	0.4	0.7	1.4	3.0	5.5	7.8	11	17	24
T_2		N·m	6.9	12	25	48	108	196	275	382	598	843
		kgf·m	0.7	1.2	2.5	4.9	11	20	28	39	61	86
Reduction ratio 30	K_1	$\times10^4$N·m/rad	0.19	0.34	0.57	1.0	2.4	—	—	—	—	—
		kgf·m/arc-min	0.056	0.10	0.17	0.30	0.70	—	—	—	—	—
	K_2	$\times10^4$N·m/rad	0.24	0.44	0.71	1.3	3.0	—	—	—	—	—
		kgf·m/arc-min	0.07	0.13	0.21	0.40	0.89	—	—	—	—	—
	K_3	$\times10^4$N·m/rad	0.34	0.67	1.1	2.1	4.9	—	—	—	—	—
		kgf·m/arc-min	0.10	0.20	0.32	0.62	1.5	—	—	—	—	—
	θ_1	$\times10^{-4}$rad	10.5	11.5	12.3	14	12.1	—	—	—	—	—
		arc-min	3.6	4.0	4.1	4.7	4.3	—	—	—	—	—
	θ_2	$\times10^{-4}$rad	31	30	38	40	38	—	—	—	—	—
		arc-min	10.7	10.2	12.7	13.4	13.3	—	—	—	—	—
Reduction ratio 50	K_1	$\times10^4$N·m/rad	0.34	0.81	1.3	2.5	5.4	10	15	20	31	—
		kgf·m/arc-min	0.1	0.24	0.38	0.74	1.6	3.0	4.3	5.9	9.3	—
	K_2	$\times10^4$N·m/rad	0.47	1.1	1.8	3.4	7.8	14	20	28	44	—
		kgf·m/arc-min	0.14	0.32	0.52	1.0	2.3	4.2	6.0	8.2	13	—
	K_3	$\times10^4$N·m/rad	0.57	1.3	2.3	4.4	9.8	18	26	34	54	—
		kgf·m/arc-min	0.17	0.4	0.67	1.3	2.9	5.3	7.6	10	16	—
	θ_1	$\times10^{-4}$rad	5.8	4.9	5.2	5.5	5.5	5.2	5.2	5.5	5.2	—
		arc-min	2.0	1.7	1.8	1.9	1.9	1.8	1.8	1.9	1.8	—
	θ_2	$\times10^{-4}$rad	16	12	15.4	15.7	15.7	15.4	15.1	15.4	15.1	—
		arc-min	5.6	4.2	5.3	5.4	5.4	5.3	5.2	5.3	5.2	—

* The values in this table are average values. The lower-limit value is approximately 80% of the displayed value.

Table 087-1

Symbol \ Model			14	17	20	25	32	40	45	50	58	65
T_1		N·m	2.0	3.9	7.0	14	29	54	76	108	168	235
		kgf·m	0.2	0.4	0.7	1.4	3.0	5.5	7.8	11	17	24
T_2		N·m	6.9	12	25	48	108	196	275	382	598	843
		kgf·m	0.7	1.2	2.5	4.9	11	20	28	39	61	86
Reduction ratio 80 or more	K_1	$\times10^4$N·m/rad	0.47	1	1.6	3.1	6.7	13	18	25	40	54
		kgf·m/arc-min	0.14	0.3	0.47	0.92	2.0	3.8	5.4	7.4	12	16
	K_2	$\times10^4$N·m/rad	0.61	1.4	2.5	5.0	11	20	29	40	61	88
		kgf·m/arc-min	0.18	0.4	0.75	1.5	3.2	6.0	8.5	12	18	26
	K_3	$\times10^4$N·m/rad	0.71	1.6	2.9	5.7	12	23	33	44	71	98
		kgf·m/arc-min	0.21	0.46	0.85	1.7	3.7	6.8	9.7	13	21	29
	θ_1	$\times10^{-4}$rad	4.1	3.9	4.4	4.4	4.4	4.1	4.1	4.4	4.1	4.4
		arc-min	1.4	1.3	1.5	1.5	1.5	1.4	1.4	1.5	1.4	1.5
	θ_2	$\times10^{-4}$rad	12	9.7	11.3	11.1	11.6	11.1	11.1	11.1	11.1	11.3
		arc-min	4.2	3.3	3.9	3.8	4.0	3.8	3.8	3.8	3.8	3.9

* The values in this table are reference values. The lower-limit value is approximately 80% of the displayed value.

Starting torque

See "Engineering data" for a description of terms. As the values in the table below vary depending on the use conditions, use them as reference values.

SHG series

Table 087-2
Unit: cN·m

Reduction ratio \ Model	14	17	20	25	32	40	45	50	58	65
30	4.8	7.2	12	18	50	—	—	—	—	—
50	3.7	5.7	7.3	14	28	50	70	94	140	—
80	2.8	3.8	4.8	8.9	19	33	47	63	94	128
100	2.4	3.3	4.3	7.9	18	29	41	56	83	114
120	—	3.1	3.9	7.3	15	27	37	51	76	104
160	—	—	3.4	6.4	14	24	33	44	68	94

SHF series

Table 087-3
Unit: cN·m

Reduction ratio \ Model	14	17	20	25	32	40	45	50	58
30	4.8	7.2	12	18	50	—	—	—	—
50	3.7	5.7	7.3	14	28	50	70	94	140
80	2.8	3.8	4.8	8.9	19	33	47	63	94
100	2.4	3.3	4.3	7.9	18	29	41	56	83
120	—	3.1	3.9	7.3	15	27	37	51	76
160	—	—	3.4	6.4	14	24	33	44	68

Overdrive starting torque

See "Engineering data" for a description of terms. As the values in the table below vary depending on the use conditions, use them as reference values.

SHG series

Table 087-4
Unit: N·m

Reduction ratio \ Model	14	17	20	25	32	40	45	50	58	65
30	2.3	3.5	6.1	11	23	—	—	—	—	—
50	2.2	3.4	4.4	8.2	17	30	42	56	84	—
80	2.7	3.7	4.6	8.6	18	32	45	60	90	123
100	2.8	4	5.2	9.5	21	35	49	67	100	137
120	—	4.5	5.6	10	21	40	54	73	110	151
160	—	—	6.6	12	26	45	64	85	130	180

SHF series

Table 087-5
Unit: N·m

Reduction ratio \ Model	14	17	20	25	32	40	45	50	58
30	2.3	3.5	6.1	11	23	—	—	—	—
50	2.2	3.4	4.4	8.2	17	30	42	56	84
80	2.7	3.7	4.6	8.6	18	32	45	60	90
100	2.8	4	5.2	9.5	21	35	49	67	100
120	—	4.5	5.6	10	21	40	54	73	110
160	—	—	6.6	12	26	45	64	85	130

Ratcheting torque

See "Engineering data" for a description of terms.

SHG series

Table 088-1
Unit: N·m

Reduction ratio \ Model	14	17	20	25	32	40	45	50	58	65
50	110	190	280	580	1200	2300	3500	—	—	—
80	140	260	450	880	1800	3600	5000	7000	10000	14000
100	100	200	330	650	1300	2700	4000	5300	8300	12000
120	—	150	310	610	1200	2400	3600	4900	7500	10000
160	—	—	280	580	1200	2300	3300	4600	7200	10000

SHF series

Table 088-2
Unit: N·m

Reduction ratio \ Model	14	17	20	25	32	40	45	50	58
30	59	100	170	340	720	—	—	—	—
50	88	150	220	450	980	1800	2700	3700	5800
80	110	200	350	680	1400	2800	3900	5400	8200
100	84	160	260	500	1000	2100	3100	4100	6400
120	—	120	240	470	980	1900	2800	3800	5800
160	—	—	220	450	980	1800	2600	3600	5600

Buckling torque

See "Engineering data" for a description of terms.

SHG series

Table 088-3
Unit: N·m

Model	14	17	20	25	32	40	45	50	58	65
All Ratios	180	350	590	1100	2400	4400	6300	8600	13400	18800

SHF series

Table 088-4
Unit: N·m

Model	14	17	20	25	32	40	45	50	58
All Ratios	140	270	440	890	1750	3750	5400	7500	11800

On no-load running torque

No-load running torque means the torque on the input side (high-speed shaft side) required to put HarmonicDrive® under a no-load condition.

Measuring condition

Table 088-5

Reduction ratio 100			
Lubrication condition	Grease lubrication	Name	Harmonic grease® SK-1A
			Harmonic grease® SK-2
		Application qty.	Appropriate application qty. (See page 092)
The torque value is the value after a trial run for two hours or longer at an input of 2000 r/min.			

* Contact us for oil lubrication.

■Correction quantity by reduction

The no-load running torque of HarmonicDrive® varies depending on the reduction ratio. Graphs 089-1 to 089-4 show the values for a reduction ratio of 100. Obtain other reduction ratios by adding the correction quantity shown in the right-hand table (Table 089-1).

Correction quantity for the no-load running torque of the component type

Table 089-1
Unit: Ncm

Model \ Reduction ratio	30	50	80	120	160
14	+1.2	+0.5	+0.1	—	—
17	+2.1	+0.9	+0.1	-0.1	—
20	+3.1	+1.4	+0.2	-0.2	-0.4
25	+5.7	+2.5	+0.4	-0.3	-0.7
32	+11.7	+5.2	+0.8	-0.6	-1.4
40	—	+9.2	+1.4	-1.0	-2.5
45	—	+12.7	+2.0	-1.4	-3.5
50	—	+17.0	+2.6	-1.9	-4.6
58	—	+25.8	+4.0	-2.9	-7.0
65	—	—	+5.4	-4.0	-9.7

■No-load running torque for a reduction ratio of 100

Input rotational speed: 500r/min

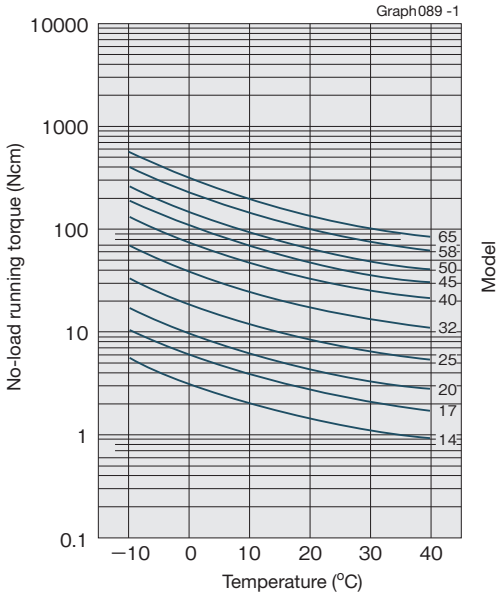

Input rotational speed: 1000r/min

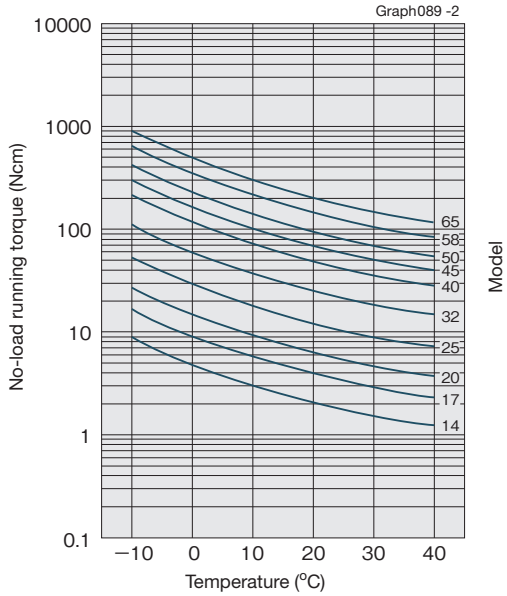

Input rotational speed: 2000r/min

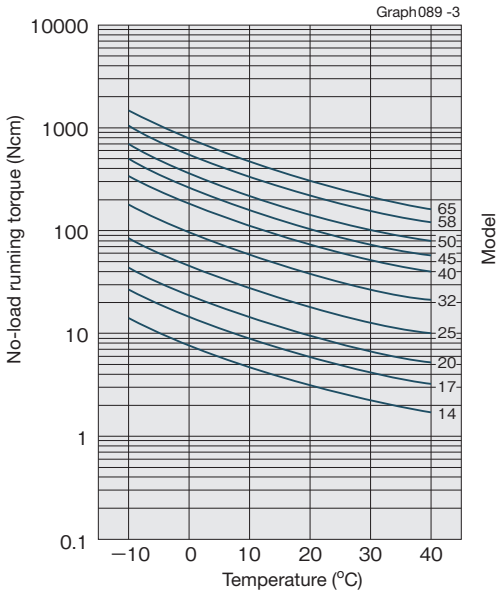

Input rotational speed: 3500r/min

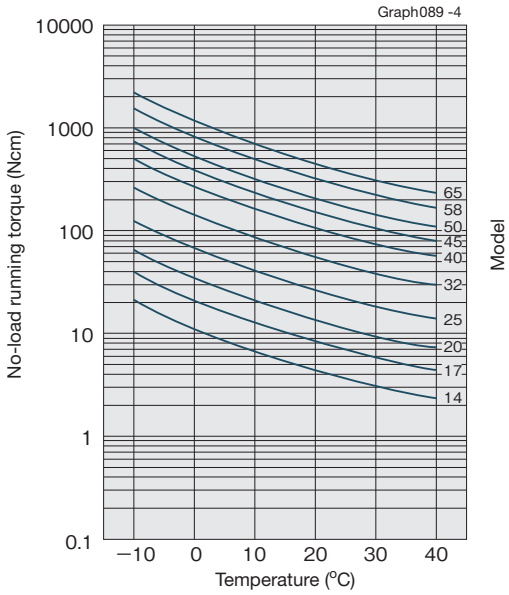

*The values in this graph are average values ($\overline{X}$). $\sigma \fallingdotseq \overline{X} \times 0.2$

Efficiency characteristics

The efficiency varies depending on the following conditions.

- Reduction ratio
- Input rotational speed
- Load torque
- Temperature
- Lubrication condition (Type of lubricant and the quantity)

Measuring condition

Table 090-1

Built-in	Measurement by building the recommended built-in precision into the product		
Load torque	The rated torque shown in the ratings (see the page 082 and 083)		
Lubricating condition	Grease lubrication	Name	Harmonic grease® SK-1A
			Harmonic grease® SK-2
		Application qty.	Appropriate application qty. (see the page 092)

* Contact us for oil lubrication.

■Efficiency correction coefficient

If the load torque is smaller than the rated torque, the efficiency value lowers. Obtain correction coefficient Ke from the efficiency correction coefficient of graph 090-1 to obtain the efficiency using the following example of calculation.

Example of calculation

Efficiency η (%) under the following condition is obtained from the example of SHF-20-80-2A-GR.
Input rotational speed: 1000 r/min
Load torque: 19.6 N·m
Lubrication method: Grease lubrication (Harmonic grease® SK-1A)
Lubricant temperature: 20°C
Since the rated torque of model number 20 with a reduction ratio of 80 is 34 N·m (ratings: Page 083), the torque ratio α is 0.58. (α=19.6/34=0.58)

- The efficiency correction coefficient is Ke=0.93 from Graph 090-1.
- Efficiency η at load torque 19.6 N·m: η=Ke·η_R=0.93 x 82=76%

Efficiency correction coefficient

Graph 090-1

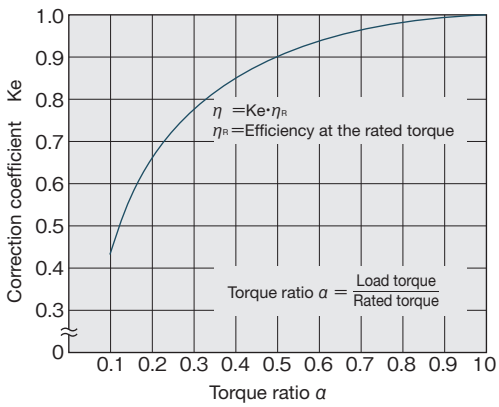

* Efficiency correction coefficient Ke=1 holds when the load torque is greater than the rated torque.

■Efficiency at rated torque

Model number: 14

Reduction ratio 30

Graph090 -2

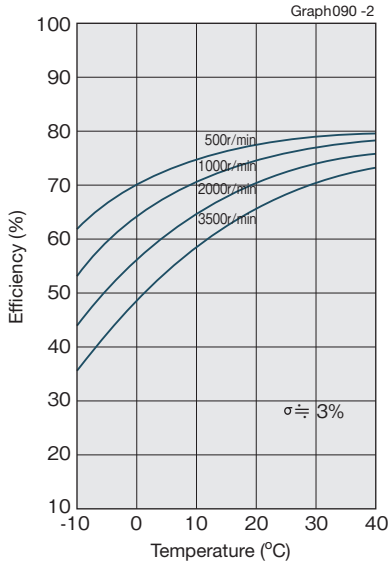

Reduction ratio 50, 80

Graph090 -3

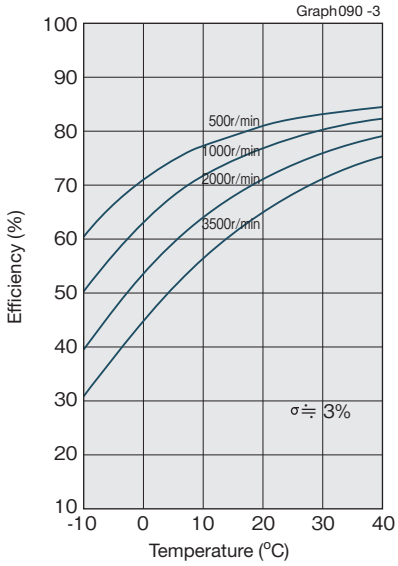

Reduction ratio 100

Graph090 -4

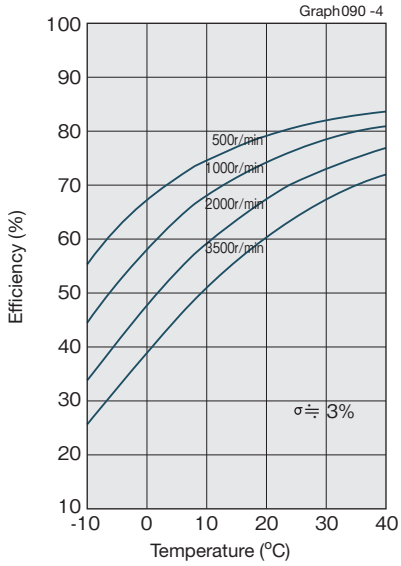

■Efficiency at rated torque

Model number: 17 to 65

Reduction ratio 30

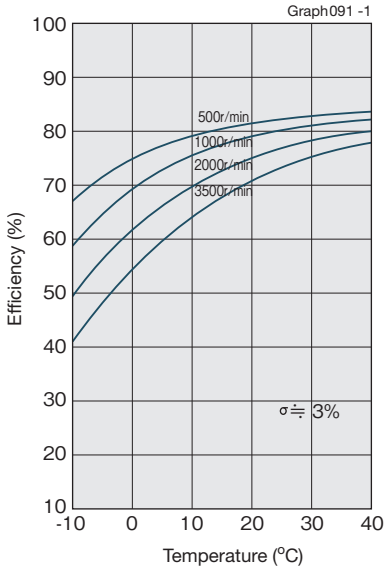

Reduction ratio 50

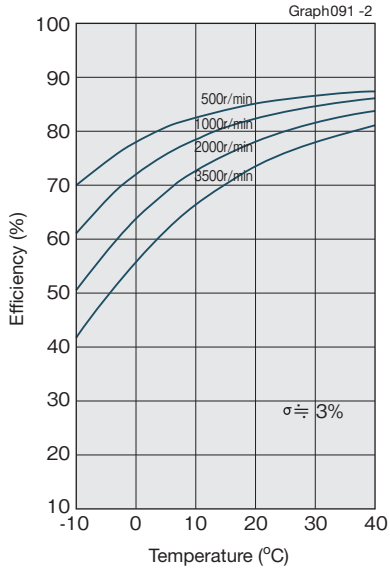

Reduction ratio 80, 100

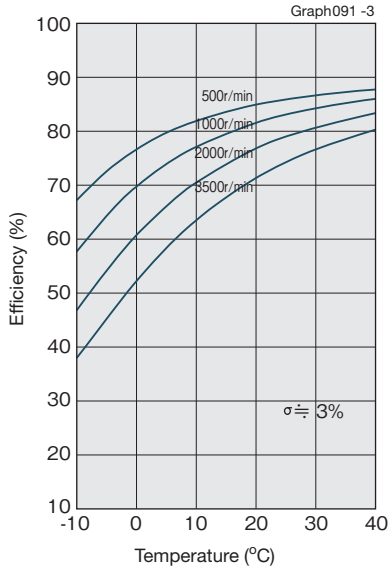

Reduction ratio 120

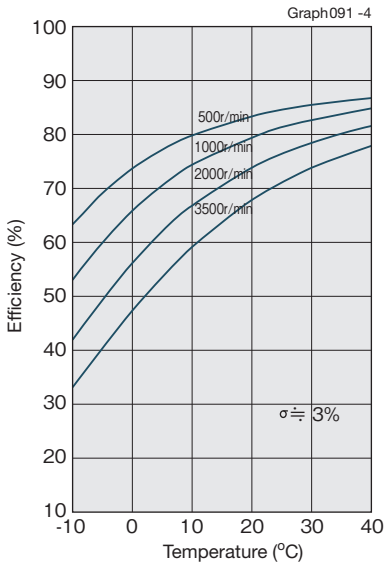

Reduction ratio 160

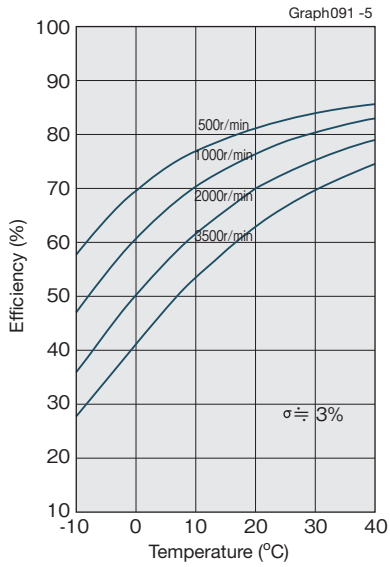

Design guide

Lubrication

■Grease lubrication

See “Engineering data” on Page 016 for details of the lubricant.

Recommended size for the inner wall of the case

Use the recommended size for the inner wall of the case of HarmonicDrive® so that grease does not fly away and remains inside HarmonicDrive® during operation. Contact us if you cannot secure the recommended size.

Recommended size for the inner wall of the case

Fig. 092-1

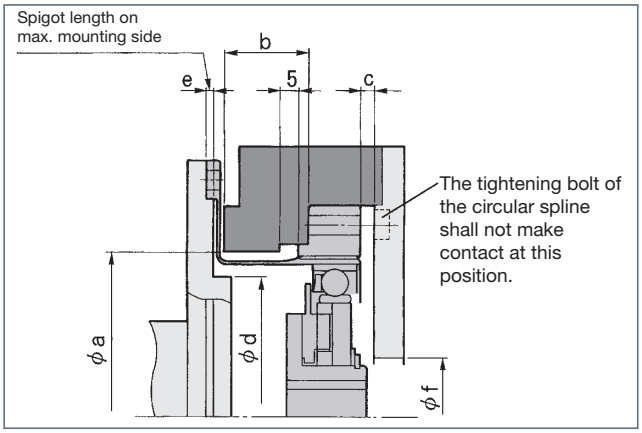

Recommended size for the inner wall of the case

Table 092-1
Unit: mm

Symbol \ Model	14	17	20	25	32	40	45	50	58	65
ϕa	38	45	53	66	86	106	119	133	154	172
b	14.6	16.4	17.8	19.8	23.2	28.6	31.9	34.2	40.1	43
c	1 (3)	1 (3)	1.5 (4.5)	1.5 (4.5)	1.5 (4.5)	2 (6)	2 (6)	2 (6)	2.5 (7.5)	2.5 (7.5)
ϕd	31	38	45	56	73	90	101	113	131	150
e	1.7	2.1	2.0	2.0	2.0	2.0	2.3	2.5	2.9	3.5
$\phi f\ ^{+0.5}_{0}$	16	26	30	37	37	45	45	45	56	62

(Note) The value in parenthesis is the value when the wave generator facing upward (see Figure 094-2 on Page 094).

Application guide

Application guide

Fig. 092-2

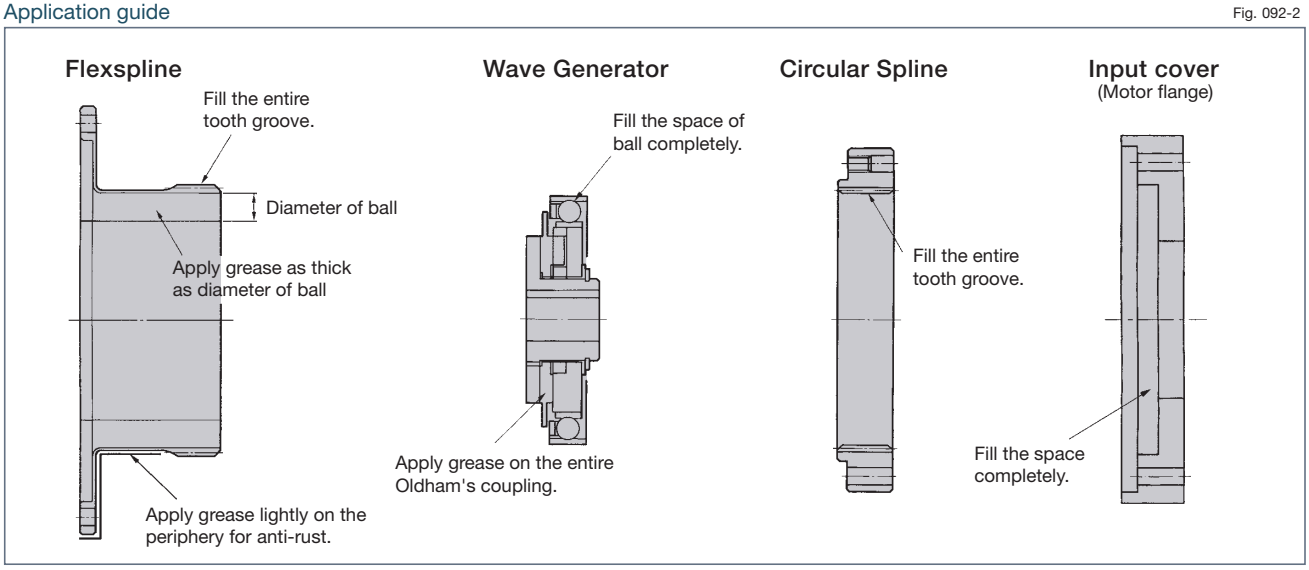

Application guide by usage

When the wave generator facing upward or downward, refer to CSF series (Figure 048-3 on Page 048) for application guide.

Application quantity

Table 092-2
Unit: g

Usage \ Model		14	17	20	25	32	40	45	50	58	65
Horizontal use		5.8	11	18	32	64	120	185	235	385	495
Vertical use	Output shaft facing upward	7.5	13	19	37	74	130	200	255	400	530
	Output shaft facing downward	8.9	15	22	42	84	150	230	290	480	630

When to replace grease

Abrasion of the sliding parts of HarmonicDrive® is influenced by grease performance. Grease performance changes by temperature and deteriorates rapidly as the temperature rises. Therefore, the grease needs to be replaced earlier than usual. The following graph indicates the time to replace the grease from the relation between the grease temperature and the total number of rotations when the average load torque is equal to or less than the rated torque. Obtain the time to replace the grease from the following calculation formula when the average load torque exceeds the rated torque.

Calculation formula when the average load torque exceeds the rated torque

Formula 093-1

$$L_{GT}=L_{GTn} \times \left(\frac{Tr}{T_{av}}\right)^3$$

Symbols of the calculation formula

Table 093-1

L_{GT}	Replacement timing if it is equal to rated torque or more	Number of rotation	————
L_{GTn}	Replacement timing if it is equal to rated torque or less	Number of rotation	See the right-hand graph.
Tr	Rated torque	N·m,kgf·m	See the "Rating table" on page 082 and 083.
T_{av}	Average load torque on the output side		Calculation formula: See Page 014.

When to replace grease: L_{GTn} (when the average load torque is equal to or less than the rated torque)

Graph 093-1

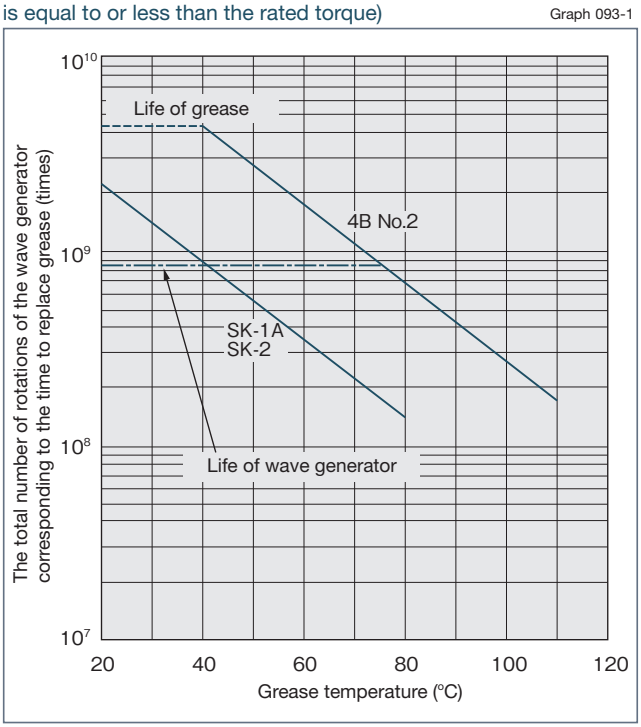

* Life of wave generator indicates the 10% of damage possibility.

■Other precautions

1. Avoid using it with other grease. HarmonicDrive® should be placed in an independent case to be built into the equipment.

2. When you use HarmonicDrive® with the wave generator facing upward (see Figure 050-2 on Page 050) at low-speed rotation (input rotational speed: 1000 r/min or less) and in one direction, you should contact our branch office as it may cause lubrication problems.

3. Oil lubrication is standard for component-type models whose model number is 50 or more with a reduction ratio of 50. Use grease lubrication within half the rated torque.

■Oil lubrication

See “Engineering data” on Page 018 for details of the lubricant.

Usage and oil level

For horizontal direction

The oil level shall be Size A of Figure 094-1.

Oil level for horizontal use

Table 094-1
Unit: mm

Model	14	17	20	25	32	40	45	50	58	65
A	10	12	14	17	24	31	35	38	44	50

Oil level for horizontal use

Fig. 094-1

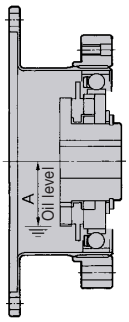

For vertical direction

Fill the center of the ball of the wave generator facing upward or downward with oil (Size B of Figure 094-2). An oil groove should be added to the flexspline. Instruct us when you place an order.

Oil level for vertical use

Table 094-2
Unit: mm

Model	14	17	20	25	32	40	45	50	58	65
B	2.5	3	3	5	7	9	10	12	13	15

Oil level for vertical use

Fig. 094-2

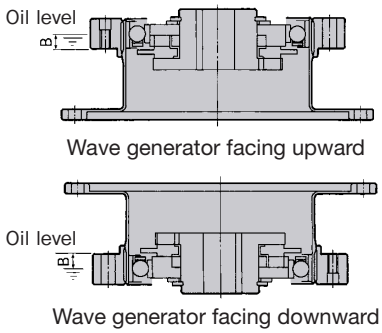

Oil groove working example of the flexspline attaching portion

Oil groove working on the flexspline attaching portion is required to circulate oil in and out of the flexspline and to eliminate the difference in pressure for oil lubrication. Work on the portion using Fig. 094-3 as a reference.

Fig. 094-3

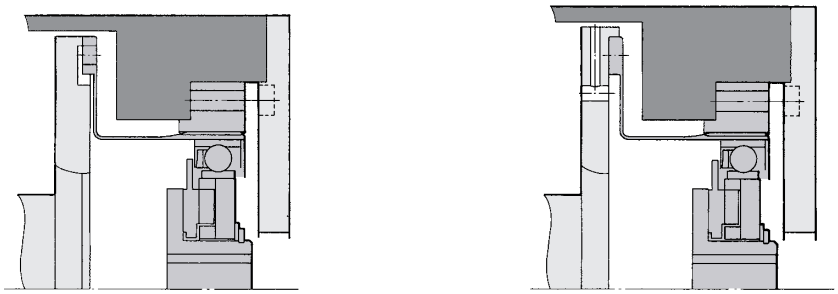

Oil quantity

Table 095-1
Unit: ℓ

Model	14	17	20	25	32	40	45	50	58	65
Oil quantity	0.01	0.02	0.03	0.07	0.13	0.25	0.32	0.4	0.7	1.0

When to replace oil

First time ..... 100 hours after starting operation
Second time or later ..... Every 1000 operation hours or every 6 months
Note that you should replace oil earlier than specified if the operating conditions are demanding.

Other precautions

Avoid using it with other grease. HarmonicDrive® should be placed in an independent case to be built in the equipment

Installation precision

Unreasonable and abnormal installation that may deform the mounting surface may lower the performance depending on the installation design.
Pay attention to the following points and maintain the recommended precision of the installation cases shown in Table 096-1 and Figure 096-1 to make a design assuring no oil leakage.

- Warp and deformation on the mounting surface
- Blocking of foreign matter
- Problems caused by burrs, embossment and location around the tap area of the mounting hole
- Insufficient chamfering on the mounting faucet joint
- Insufficient roundness on the mounting faucet joint

Recommended precision for the built-in case

Fig. 096-1

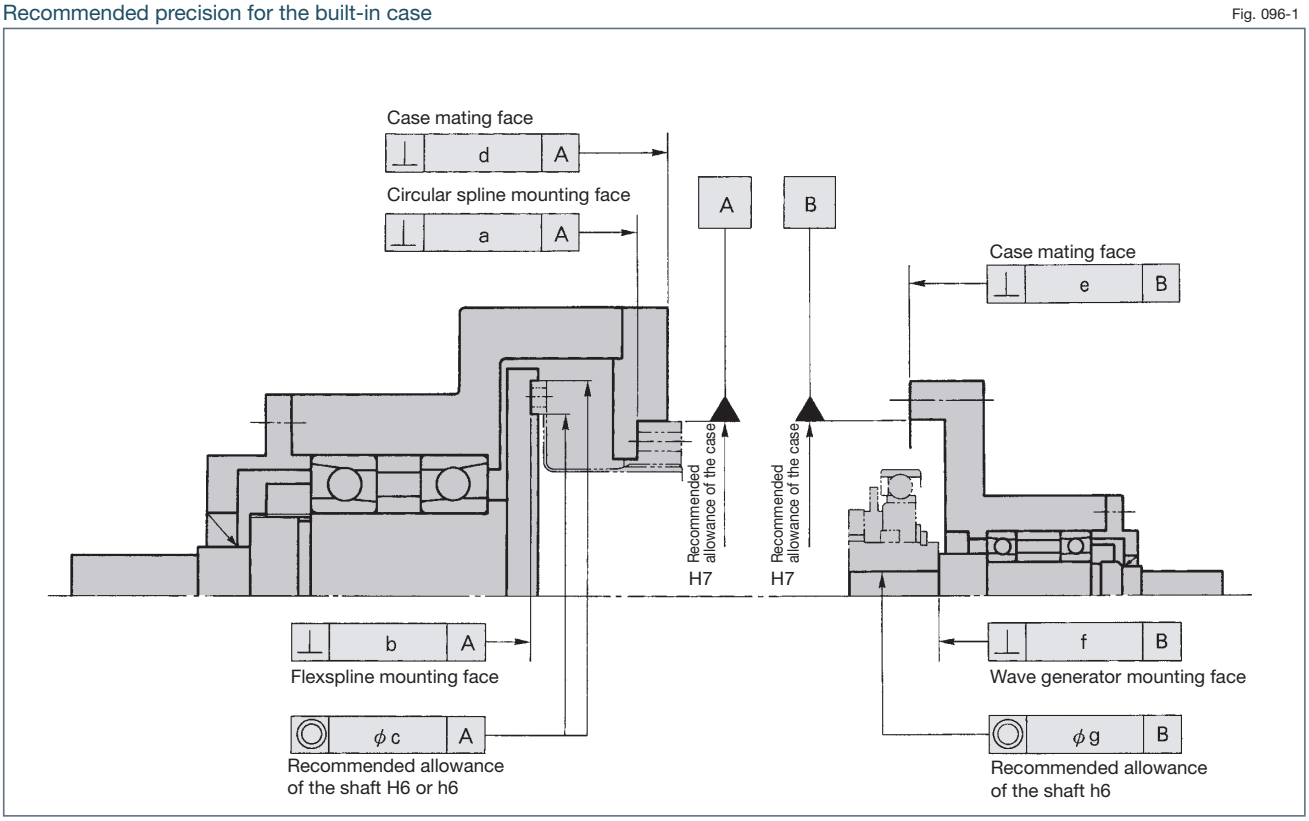

Recommended precision for the built-in case

Table 096-1
Unit: mm

Symbol \ Model	14	17	20	25	32	40	45	50	58	65
a	0.011	0.012	0.013	0.014	0.016	0.016	0.017	0.018	0.020	0.023
b	0.016	0.021	0.027	0.035	0.042	0.048	0.053	0.057	0.062	0.067
ϕc	0.015	0.018	0.019	0.022	0.022	0.024	0.027	0.030	0.032	0.035
d	0.011	0.015	0.017	0.024	0.026	0.026	0.027	0.028	0.031	0.034
e	0.011	0.015	0.017	0.024	0.026	0.026	0.027	0.028	0.031	0.034
f	0.017 (0.008)	0.020 (0.010)	0.024 (0.012)	0.024 (0.012)	0.024 (0.012)	0.032 (0.012)	0.032 (0.013)	0.032 (0.015)	0.032 (0.015)	0.032 (0.015)
ϕg	0.030 (0.016)	0.034 (0.018)	0.044 (0.019)	0.047 (0.022)	0.050 (0.022)	0.063 (0.024)	0.065 (0.027)	0.066 (0.030)	0.068 (0.033)	0.070 (0.035)

(Note) The value in the parentheses indicates the rigid type of wave generator (without Oldham's coupling structure).

Sealing mechanism

The following sealing mechanism is required to prevent grease leakage and maintain the high durability of HarmonicDrive®.

- Rotating and sliding area..... Oil seal (with a spring). Take care regarding flaws on the shaft.
- Flange mating face and mating ..... O-ring and seal agent. Take care regarding the distortion on the plane and how the O-ring is engaged.
- Screw hole area..... Use a screw lock agent (Locktite 242 is recommended) or seal tape.

(Note) Observe the description above for the particular use of Harmonic grease® 4B No.2.

Installation of three parts of basic elements

■Installation of the wave generator

1. Maximum hole diameter size

The standard hole diameter of the wave generator is as shown in the dimensional outline drawing (Page 085) and may be changed in the range up to the maximum dimension shown in the table. The JIS standard is recommended for the key groove size. The valid length of the key shall be the value fully durable for the transmission torque.

* The shape can be changed to special forms for taper holes and so on.

Oldham's coupling mechanism may be eliminated to make a hole diameter larger than the maximum size. The maximum hole diameter can be up to the value shown in the table below taking deformation of the wave generator plug by load torque into consideration.
(This is the value including the dimension of the key groove depth.)

Hole diameter of the wave generator

Fig. 097-1

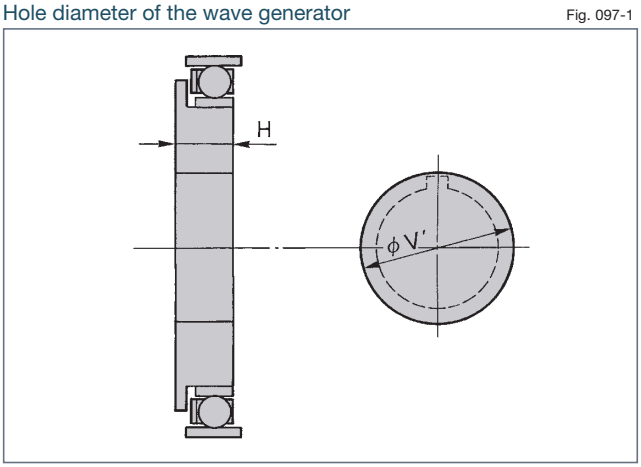

Hole diameter of the wave generator hub

Table 097-1
Unit: mm

Size \ Model	14	17	20	25	32	40	45	50	58	65
Stand. dimension (H7)	6	8	9	11	14	14	19	19	22	24
Prepared hole size (ϕ)	3	4	5	6	6	10	10	10	13	16
Maximum size (ϕ)	8	10	13	15	15	20	20	20	25	30

Plug maximum diameter and minimum thickness of installing the wave generator plug directly on the input shaft

Table 097-2
Unit: mm

Size \ Model	14	17	20	25	32	40	45	50	58	65
Max. hole ϕV'	17	20	23	28	36	42	47	52	60	67
Min. plug thickness H $^{0}_{-0.1}$	7.2	7.6	11.3	11.3	13.7	15.9	17.8	19	21.4	13.5

2. Thrust force of the wave generator and fixation of the shaft

Thrust force is applied on the wave generator during operation due to elastic deformation of the flexspline of HarmonicDrive®. The thrust force used as a reducer ((1), (2) and (3) on Page 011) works in the diaphragm direction of the flexspline (Figure 097-2), while the thrust force used as an overdrive ((4), (5) and (6) on Page 011) works in the opposite direction (Figure 097-2).
You can obtain the thrust force (maximum value) of the wave generator with the following calculation formula. Thrust force varies depending on the operating condition. It tends to increase and shows almost the same value as that obtained by the calculation formula when the torque is high, when the speed is very low and when the rotation is constant and continuous. Work out a design to eliminate the thrust force of the wave generator in either case.

(Note) Contact us when you fix the wave generator hub and the input shaft with a retaining screw.

Shapes and sizes of the wave generator

Fig. 097-2

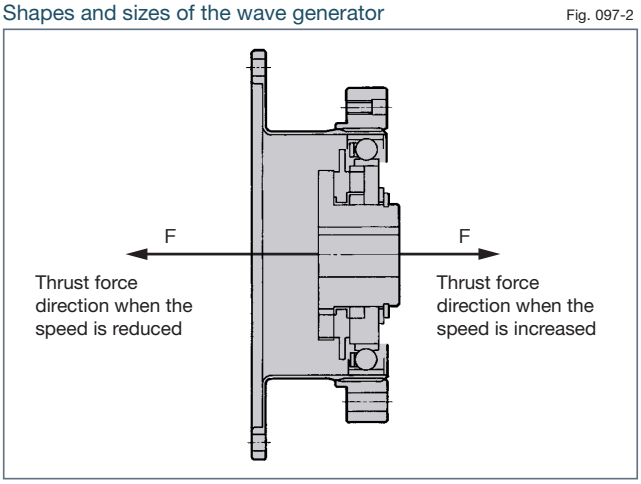

Calculation formula of thrust force

Table 097-3

Reduction ratio	Calculation formula
30	$F=2\times\frac{T}{D}\times0.07\times\tan32°$
50	$F=2\times\frac{T}{D}\times0.07\times\tan30°$
80 or more	$F=2\times\frac{T}{D}\times0.07\times\tan20°$

Symbols of the calculation formula

Table 097-4

F	Thrust force	N	See Fig. 097-2.
D	(Model) ×0.00254	m	
T	Output torque	N·m	

Example of calculation

Formula 097-1

Model name : SHF series
Model number : 32
Reduction ratio: i=50
Output torque : 382 N·m (max. permissible momentary torque)

$$F=2\times\frac{382}{(32\times0.00254)}\times0.07\times\tan30°$$

F=380N

3. Shapes and sizes of the wave generator

The shapes and sizes of the wave generator of the SHF series are different from those of the SHG series. Exercise extreme care in design and installation. It should also be noted that the mounting bolts of the flexspline must not interfere with the wave generator. Table 098-1 and Figure 098-1 show a comparison of the shapes and sizes of the wave generator.

Comparison of shapes and sizes of the wave generator — Fig. 098-1

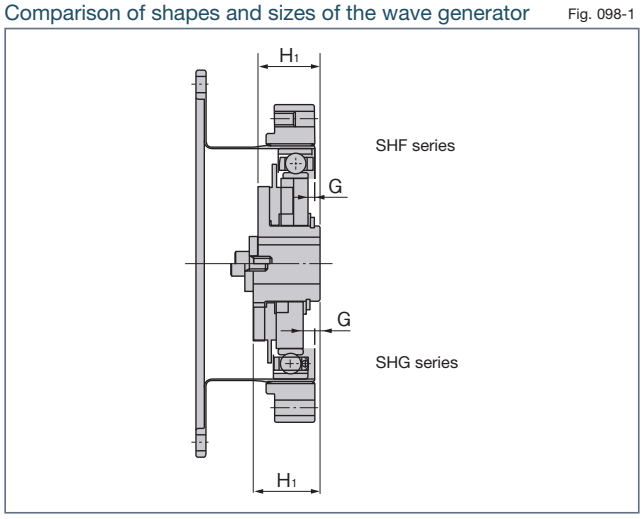

Comparison of sizes of the wave generator hub — Table 098-1, Unit: mm

Symbol \ Model		14	17	20	25	32	40	45	50	58	65
G	SHG Series	1.4	1.6	1.5	3.5	4.2	5.6	6.3	7	8.2	9.5
	SHF Series	0.4	0.3	0.1	2.1	2.5	3.3	3.7	4.2	4.8	—
H_1	SHG Series	$18.5^{0}_{-0.1}$	$20.7^{0}_{-0.1}$	$21.5^{0}_{-0.1}$	$21.6^{0}_{-0.1}$	$23.6^{0}_{-0.1}$	$29.7^{0}_{-0.1}$	$30.5^{0}_{-0.1}$	$34.8^{0}_{-0.1}$	$38.3^{0}_{-0.1}$	$44.6^{0}_{-0.1}$
	SHF Series	$17.6^{0}_{-0.1}$	$19.5^{0}_{-0.1}$	$20.1^{0}_{-0.1}$	$20.2^{0}_{-0.1}$	$22^{0}_{-0.1}$	$27.5^{0}_{-0.1}$	$27.9^{0}_{-0.1}$	$32^{0}_{-0.1}$	$34.9^{0}_{-0.1}$	—

■Installation of the flexspline

1. Recommended size of the mounting diameter

The mounting diameter should have sufficient allowance (Size D shown in Fig. 098-2) to avoid interference with the diaphragm of the flexspline.
Observe this carefully as the diaphragm may be damaged if the diameter is too small.

Recommended size of the mounting diameter — Fig. 098-2

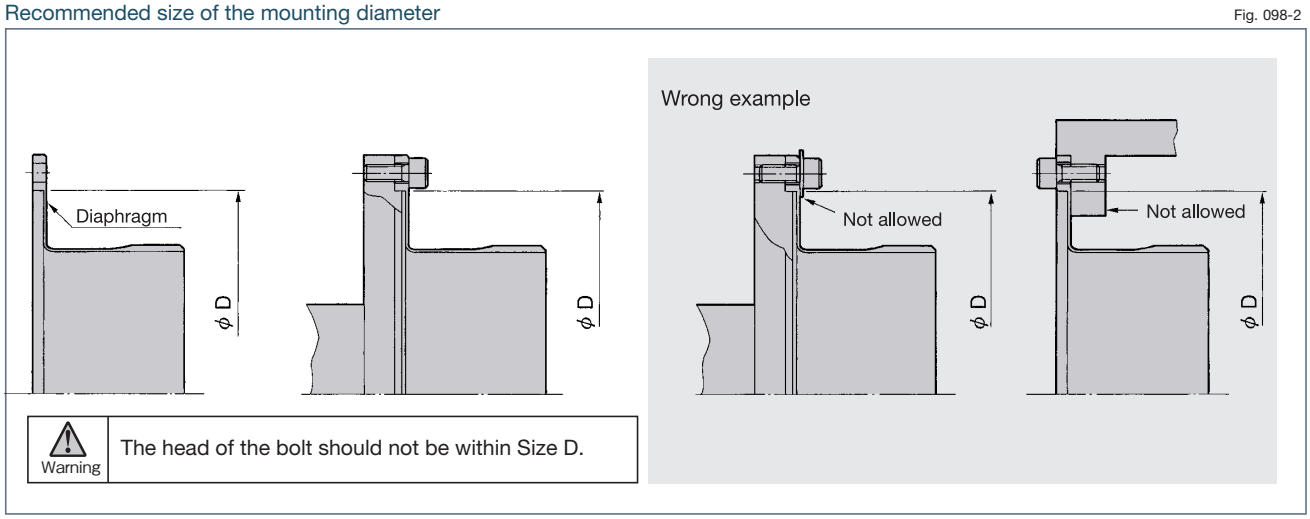

Size of the mounting diameter — Table 098-2, Unit: Ncm

Symbol \ Model	14	17	20	25	32	40	45	50	58	65
ϕD	48	60	70	88	114	140	158	175	203	232

2. Tightening bolts of the flexspline

Bolts are tightened for installing the flexspline.
As the transmission torque on the tightening area changes significantly according to the conditions described as follows, design and part control corresponding to the load condition should be conducted.
In addition, SHG series has larger torque capacity compared with SHF series. Tighten the bolts according to each series.

- Intensity of the selected bolt
- Tightening of bolts and the tightening torque
- Surface condition of bolts and female screws
- Friction coefficient of the contact surface

SHG series: Installation of flexspline

Table 099-1

Item \ Model		14	17	20	25	32	40	45	50	58	65
Number of bolts		8	12	12	12	12	12	18	12	16	16
Bolt size		M3	M3	M3	M4	M5	M6	M6	M8	M8	M10
Installation of bolts: P.C.D.	mm	54	66	76	96	124	152	180	200	226	258
Bolt tightening torque	N·m	2.4	2.4	2.4	5.4	10.8	18.4	18.4	44	44	74
	kgf·m	0.24	0.24	0.24	0.55	1.10	1.87	1.87	4.5	4.5	7.6
Bolt transmission torque	N·m	108	198	228	486	1000	1740	3098	4163	6272	9546
	kgf·m	11	20	23	50	102	178	316	425	640	974

SHF series: Installation of flexspline

Table 099-2

Item \ Model		14	17	20	25	32	40	45	50	58
Number of bolts		8	12	12	12	12	12	18	12	16
Bolt size		M3	M3	M3	M4	M5	M6	M6	M8	M8
Installation of bolts: P.C.D.	mm	54	66	76	96	124	152	170	190	218
Bolt tightening torque	N·m	2.0	2.0	2.0	4.5	9.0	15.3	15.3	37	37
	kgf·m	0.20	0.20	0.20	0.46	0.92	1.56	1.56	3.8	3.8
Bolt transmission torque	N·m	88	157	186	402	843	1450	2430	3312	5076
	kgf·m	9.0	16	19	41	86	148	248	338	518

(Table 099-1, 099-2/Notes)
1. It is assumed that the material of the female screws can endure the bolt tightening torque.
2. Recommended bolt Bolt name: JIS B 1176 hexagonal bolt Intensity type: JIS B 1051 12.9 or more
3. Torque efficiency: K=0.2
4. Tightening efficiency: A=1.4
5. Tightening friction coefficient μ=0.15

■Installation of the circular spline

Perform design and part control corresponding to the load condition for installation of the circular spline in the same way as the flexspline. Transmission torques by the recommended bolts and tightening torque are shown as follows. When the transmission torque is smaller than the load torque, the additional use of pins and bolts should be reviewed. Perform installation to meet the requirements of each series.

SHG series: Installation with bolts

Table 100-1

Item \ Model		14	17	20	25	32	40	45	50	58	65
Number of bolts		8	16	16	16	16	16	16	16	16	16
Bolt size		M3	M3	M3	M4	M5	M6	M8	M8	M10	M10
Installation of bolts: P.C.D.	mm	44	54	62	75	100	120	140	150	175	195
Bolt tightening torque	N·m	2.0	2.0	2.0	4.5	9.0	15.3	37	37	74	74
	kgf·m	0.20	0.20	0.20	0.46	0.92	1.56	3.8	3.8	7.5	7.5
Bolt transmission torque	N·m	72	175	196	419	901	1530	3238	3469	6475	7215
	kgf·m	7.3	18	20	43	92	156	330	354	661	736

SHF series: Installation with bolts

Table 100-2

Item \ Model		14	17	20	25	32	40	45	50	58
Number of bolts		6	12	12	12	12	12	12	12	12
Bolt size		M3	M3	M3	M4	M5	M6	M8	M8	M10
Installation of bolts: P.C.D.	mm	44	54	62	75	100	120	140	150	175
Bolt tightening torque	N·m	2.0	2.0	2.0	4.5	9.0	15.3	37	37	74
	kgf·m	0.20	0.20	0.20	0.46	0.92	1.56	3.8	3.8	7.5
Bolt transmission torque	N·m	54	131	147	314	676	1150	2440	2620	4820
	kgf·m	5.5	13	15	32	69	117	249	267	492

(Table 100-1, 100-2/Notes)

1. It is assumed that the material of the female screws can endure the bolt tightening torque.
2. Recommended bolt Bolt name: JIS B 1176 hexagonal bolt Intensity type: JIS B 1051 12.9 or more
3. Torque efficiency: K=0.2
4. Tightening efficiency: A=1.4
5. Tightening friction coefficient μ=0.15

■Order of installing of three parts of basic elements

Install the wave generator after setting the circular spline and the flexspline on the equipment. Installing the generator in other ways may cause a “dedoi-dal” condition (see Page 029) and damage the tooth plane. Take extra care.

Order of appropriate installing three parts

Fig. 101-1

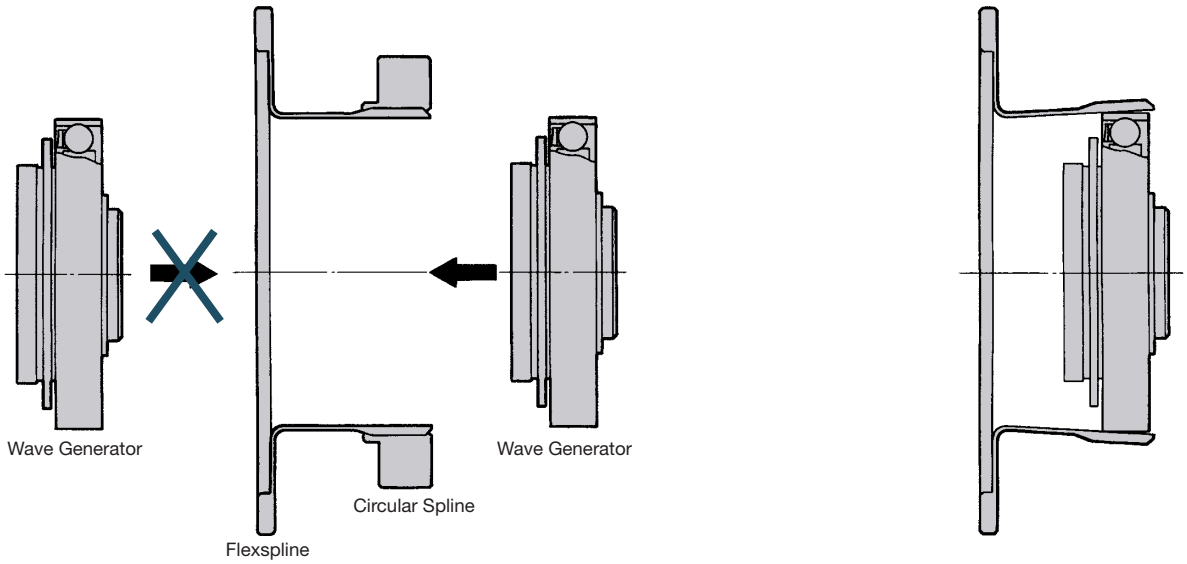

Wave generator cannot be installed from side of Diaphragm.

When the flexspline is combined with the wave generator, the long shaft extends to the outside of the opening of the flexspline

■Precautions on assembly

HarmonicDrive® may generate vibration and abnormal sound due to problems during assembly. Perform assembly based on the following precautions.

Precautions on the wave generator

1. Avoid such assembly where excessive force is applied to the wave generator bearing. You can smoothly insert the wave generator by turning it.

2. Pay attention so that the effect of misalignment and turnover is within the recommended value (see “Built-in precision” on Page 096) for the wave generator without Oldham’s coupling mechanism.

Precautions on the circular spline

1. Is flatness of the mounting surface poor or distorted?

2. Is any embossment of the screw hole area, burr or trapped foreign matter found?

3. Have chamfering and relief working of the corner been conducted to prevent interference of the corner of the circular spline in the house built-in area?

4. Can the circular spline rotate built in the house? Does it interfere with or catch on any part?

5. Does any bolt inserted into the mounting bolt hole interfere with the circular spline and rotate heavily due to the bolt hole being misaligned or oblique?

6. Do not tighten the bolts with the specified torque all at once. Tighten the bolts temporarily with about half the specified torque, and then tighten them with the specified torque. Tighten them in an even, crisscross pattern.

7. Avoid pinning the circular spline if possible as it may reduce the rotational precision.

Precautions on the flexspline

1. Is flatness of the mounting surface poor or distorted?

2. Is any embossment of the screw hole area, burr or trapped foreign matter found?

3. Have chamfering and relief working of the corner been conducted to prevent the interference of the corner of the circular spline in the house built-in area?

4. Does any bolt inserted into the mounting bolt hole interfere with the circular spline and rotate irregularly due to the bolt hole being misaligned or oblique?

5. Do not tighten the bolts with the specified torque all at once. Tighten the bolts temporarily with about half the specified torque, and then tighten them with the specified torque. Tighten them in an even, crisscross pattern.

6. Does it engage with the circular spline in an extremely unbalanced way when it is combined? If it is unbalanced, they could be misaligned or not upright.

7. Avoid hitting the tip of the teeth on the opening and inserting the circular spline with excessive force in assembling it

On anti-rust provision

The surface of HarmonicDrive® is not anti-rust treated. Apply anti-rust agent to the surface if required. Contact us if you would like us to provide the surface with anti-rust treatment.

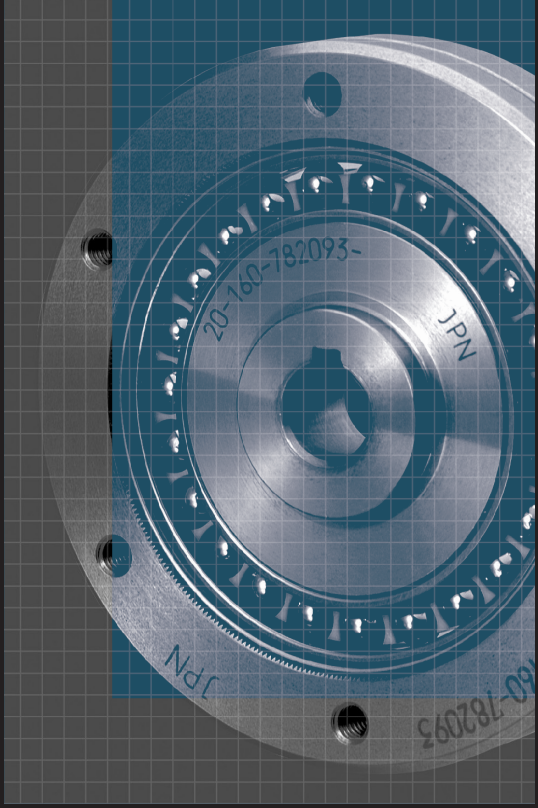

FB Series

Component Type FB

Features

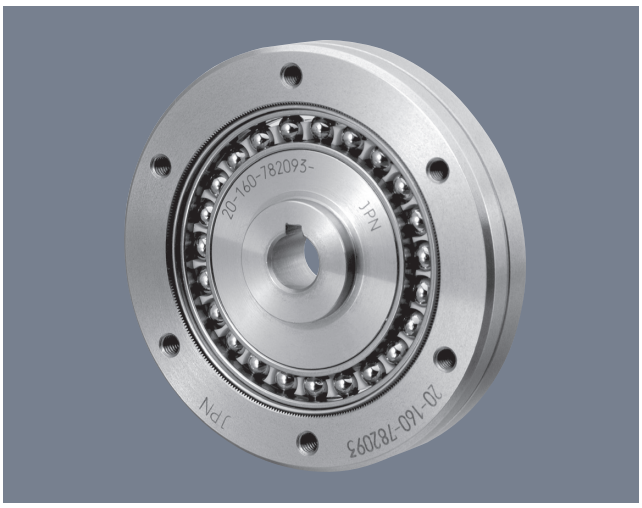

■FB series component type

The FB series component type has pursued flatness and thinness. It consists of four parts and operates using the same principle as the cup type of the CSG/CSF series.
The flexspline of the pancake type is shaped like the flexspline of the cup type with a cut bottom and is structured to have an additional circular spline with the same number of teeth as the flexspline.

Features of FB series

- ■Flat and thin shape
- ■Compact and simple design
- ■High positioning and rotational accuracies
- ■Coaxial input and output

Structure of the FB series component type

Fig. 104-1

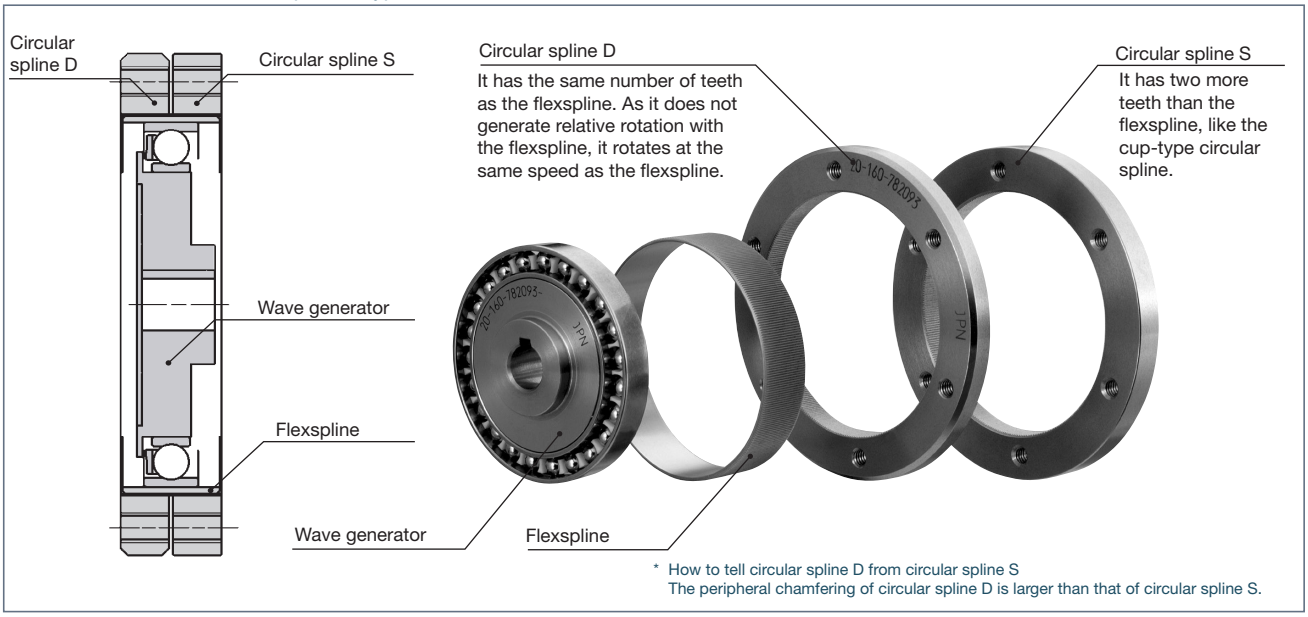

* How to tell circular spline D from circular spline S
The peripheral chamfering of circular spline D is larger than that of circular spline S.

Model and symbol

FB - 20 - 80 - 2 - GR

Table 105-1

Model name	Model No.	Reduction ratio*										Model	
FB	14	50	—	88	100	110	—	—	—	—	—	2= Component type	GR= New type * There is no G for Model 14
	20	50	—	80	100	—	—	128	—	—	160		
	25	50	—	80	100	—	120	—	—	—	160		
	32	50	78	—	100	—	—	—	131	157	—		
	40	50	—	80	100	—	—	128	—	—	160		
	50	—	—	80	100	—	120	—	—	—	160		

*The reduction ratio indicates the value for the following condition.Input: wave generator, fixed: circular spline S, output: circular spline D

Rotational direction and reduction ratio

Fig. 105-1

Input Output

(Note) Contact us if you use the product as Accelerator (1) and (2).

① 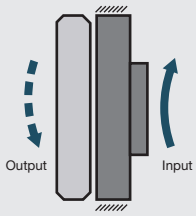

(1) Reducer
Input: Wave Generator
Output: Circular Spline D
Fixed: Circular Spline S
$i=\frac{-1}{R}$

② 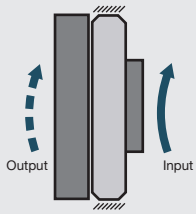

(2) Reducer
Input: Wave Generator
Output: Circular Spline S
Fixed: Circular Spline D
$i=\frac{1}{R+1}$

③ 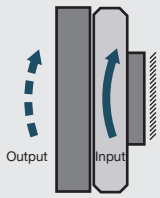

(3) Reducer
Input: Circular Spline D
Output: Circular Spline S
Fixed: Wave Generator
$i=\frac{R}{R+1}$

④ 

(4) Overdrive
Input: Circular Spline S
Output: Circular Spline D
Fixed: Wave Generator
$i=\frac{R+1}{R}$

⑤ 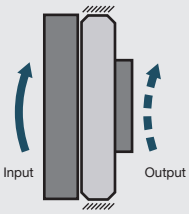

(5) Overdrive
Input: Circular Spline S
Output: Wave Generator
Fixed: Circular Spline D
$i=R+1$

⑥ 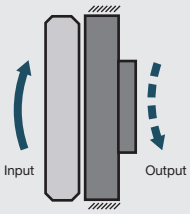

(6) Overdrive
Input: Circular Spline D
Output: Wave Generator
Fixed: Circular Spline S
$i=-R$

⑦ 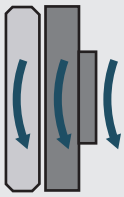

(7) Differential
When all of the Wave Generator, the Circular Spline S and the Circular Spline D rotate, Combinations (1) through (6) are available.

Technical Data

Rating table

Table 106-1

Model	Reduction ratio	Rated torque at input 2000r/min		Permissible peak torque at start/stop		Permissible max. value of ave. load torque		Instantaneous permissible max. torque		Rated input rotational speed	Permissible max. input rotational speed (r/min)		Permissible ave. input rotational speed (r/min)		Inertia moment	
		N·m	kgf·m	N·m	kgf·m	N·m	kgf·m	N·m	kgf·m	r/min	Oil lubricant	Grease lubricant	Oil lubricant	Grease lubricant	I $\times10^{-4}$kg·m^2	J $\times10^{-5}$kgf·ms^2
14	50	2.6	0.27	3.2	0.33	3.2	0.33	6.9	0.7	2000	6000	3600	4000	2500	0.033	0.034
	88	4.9	0.5	7.8	0.8	7.8	0.8	15.7	1.6*							
	100	5.9	0.6	9.8	1.0	9.8	1.0	15.7	1.6*							
	110	5.9	0.6	9.8	1.0	9.8	1.0	15.7	1.6*							
20	50	14	1.4	18	1.8	18	1.8	34	3.5	2000	6000	3600	3600	2500	0.135	0.138
	80	17	1.7	21	2.1	21	2.1	35	3.6							
	100	22	2.2	26	2.7	25	2.5	47	4.8							
	128	24	2.4	33	3.4	25	2.5	58	5.9							
	160	24	2.4	38	3.9	25	2.5	59	6.0*							
25	50	23	2.3	30	3.1	30	3.1	54	5.5	2000	5000	3600	3000	2500	0.36	0.37
	80	31	3.2	39	4.0	39	4.0	70	7.1							
	100	39	4.0	52	5.3	52	5.3	91	9.3							
	120	39	4.0	61	6.2	61	6.2	94	9.6*							
	160	39	4.0	76	7.8	61	6.2	86	8.8*							
32	50	44	4.5	60	6.1	60	6.1	108	11	2000	4500	3600	2500	2300	1.29	1.32
	78	63	6.4	75	7.7	75	7.7	127	13							
	100	82	8.4	98	10	98	10	176	18							
	131	82	8.4	137	14	118	12	235	24*							
	157	82	8.4	157	16	118	12	235	24*							
40	50	88	9	118	12	118	12	216	22	2000	4000	3300	2000	2000	3.38	3.45
	80	118	12	147	15	147	15	265	27							
	100	157	16	186	19	186	19	343	35							
	128	167	17	235	24	235	24	372	38*							
	160	167	17	284	29	274	28	353	38*							
50	80	216	22	265	27	265	27	480	49	1700	3500	3000	1700	1700	9.9	10
	100	284	29	253	36	353	36	627	64							
	120	304	31	421	43	421	43	706	72*							
	160	304	31	510	52	490	50	666	68*							

* The value of asterisk is limited by ratcheting torque.

(Note) Inertia moment: $I=\frac{1}{4}GD^2$

Outline drawing

Fig. 107-1

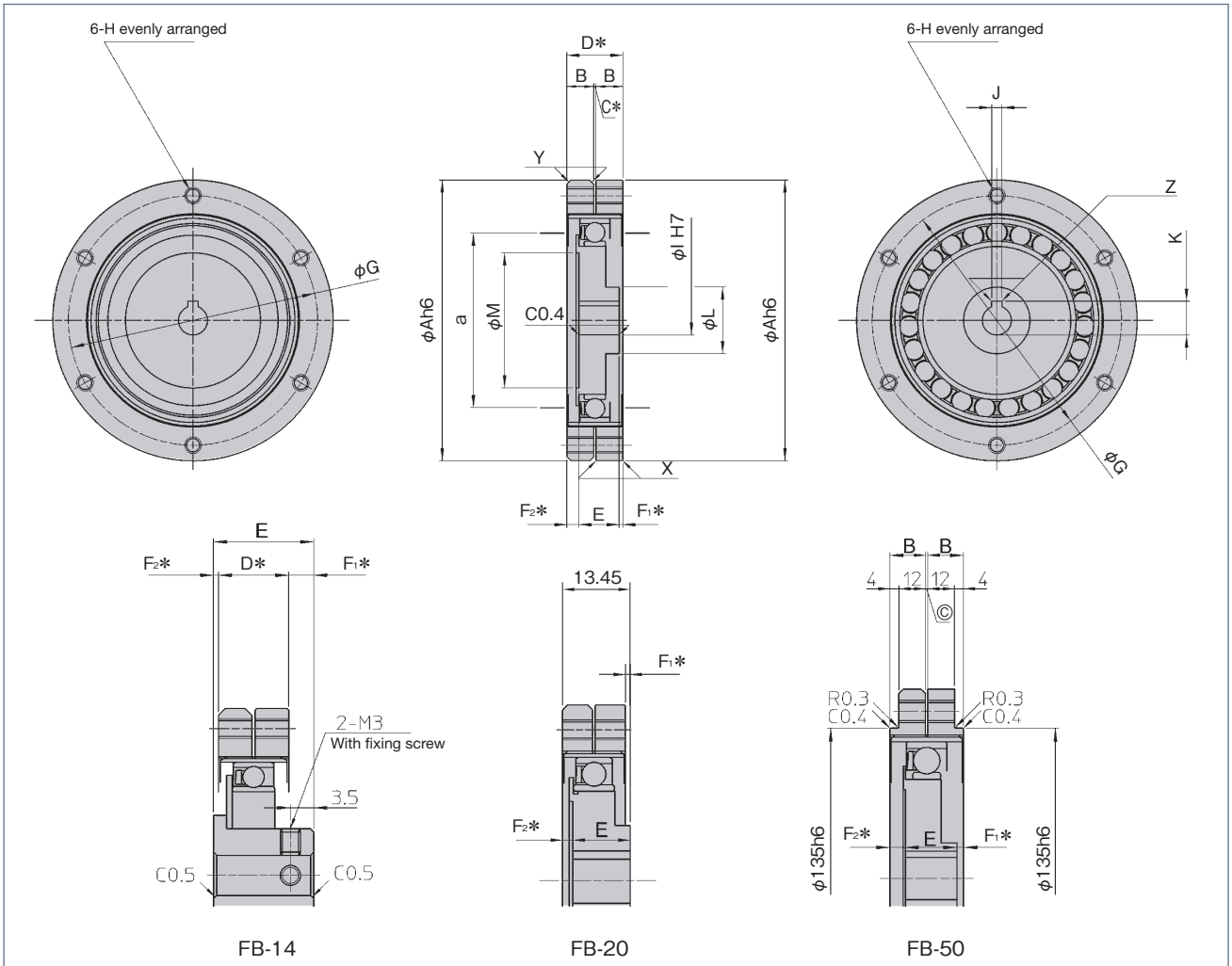

FB-14 FB-20 FB-50

* The allowance varies depending on the part manufacturing method (cast or machined products). Contact us if the allowance is not described in the dimensions and is required.

Measurement table

Table 107-1
Unit: mm

Symbol \ Model		14	20	25	32	40	50
φA (h6)		50	70	85	110	135	170
B		5	6	8	10	13	16
C*		0.5	0.5	0.5	0.5	1.0	1.0
D*		10.5	12.5	16.5	20.5	27	33
E $^{0}_{-0.1}$		15.0	11.4	12.8	15.6	19.4	23.2
F_1*		3.75	0.95	0.35	0.95	1.8	2.9
F_2*		0.75	2.05	3.35	3.95	5.8	6.9
φG		44	60	75	100	120	150
H		M3	M4	M5	M6	M8	M10
φI (H7)	Standard	6	9	14	14	14	19
	Max. size	8	12	15	15	20	20
J (Js9)		—	3	5	5	5	6
K $^{+0.1}_{0}$		—	10.4	16.3	16.3	16.3	21.8
φL		14	20	26	26	32	32
φM		—	31.5	41	52	65	80
X		C0.2	C0.2	C0.2	C0.2	C0.4	C0.4
Y		C1.0	C1.0	C1.5	C1.5	C2.0	C2.0
Z		—	R0.08～0.16	R0.16～0.25	R0.16～0.25	R0.16～0.25	R0.16～0.25
a		29	42	53	69	84	105
Mass (kgf)		0.1	0.3	0.5	1.0	1.8	2.9

(Note) For Circular spline D, the outer circumference is Size Y.

- The C, D and F_1 and F_2 sizes indicated by an asterisk are the mounting positions in the shaft direction and allowance of the three parts (wave generator, flexspline, circular spline) comprising HarmonicDrive®. Strictly observe these sizes as they affect the performance and intensity.
- Four parts (wave generator, flexspline, circular spline D, circular spline S) are not built in when the product is delivered.

Efficiency characteristics

Efficiency varies depending on the reduction ratio and is subject to the input rotational speed, load torque and oil temperature. It looks like Graph 108-1 when the product is operated at 100% of the rated load in the catalog at 40ºC.

(Note) The efficiency is increased by about 10% for the grease lubrication.

Graph 108-1

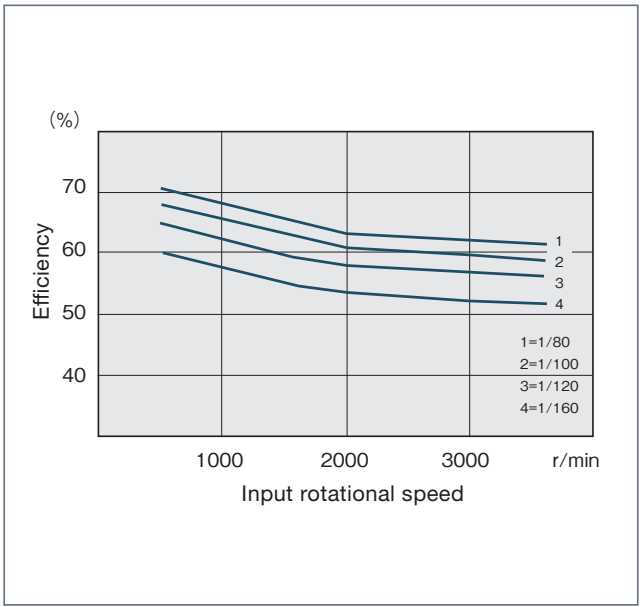

No-load running torque, starting torque, overdrive starting torque

Graph 108-2 shows the result of measurement when the component has been built in as the double shaft-type reducer. The values include frictional resistance due to the oil seal of the input and output shaft, and oil bath-type lubrication.

1. No-load running torque ..... This is the torque on the high-speed shaft required for rotation in a no-load condition. The value in the graph indicates the condition when the input rotational speed is 1500 r/min and the oil temperature is about 40ºC.

2. Starting torque ..... This is the static torque required to start the high-speed shaft in a no-load condition.

3. Overdrive starting torque ... This is the static torque required to start the low-speed shaft in a no-load condition.

Graph 108-2

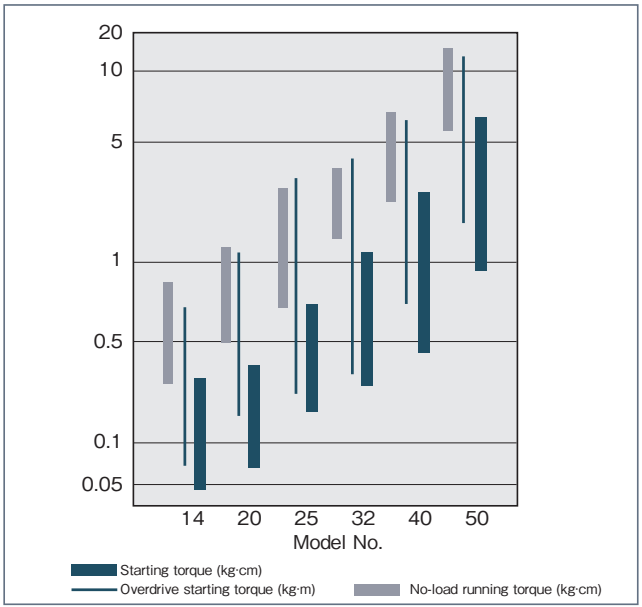

Lost motion and the spring constant

See Page 120 for a definition of lost motion and the spring constant. Lost motion and the spring constant of the pancake type is the value when either of the wave generator or the circular spline is fixed and when a torque is applied to another circular spline.

Table 108-1

Model No.	Lost motion		Spring constant	
	± Load (kg·m)	Lost motion (arc-min)	Load (kg·m)	Spring constant (kgf·m/arc-min)
14	0.04	3.0	0.8	0.05
20	0.12	3.0	2.5	0.35
25	0.23	3.0	4.0	0.50
32	0.46	3.0	10	1.2
40	0.92	3.0	16	2.1
50	1.73	3.0	30	4.4

Design guide

Installation precision

Maintain the recommended precision shown in Figure 109-1 and Table 109-1 to fully bring out the excellent performance of HarmonicDrive® for built-in design.

Recommended precision for the built-in case

Fig. 109-1

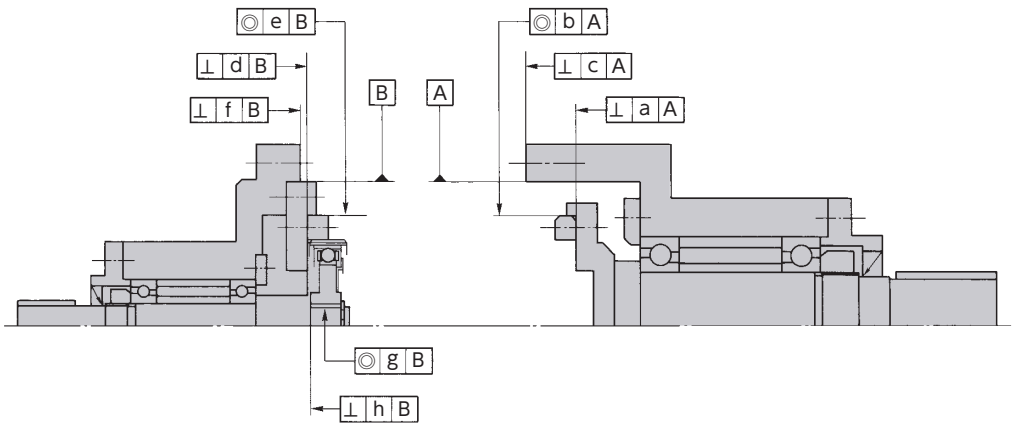

Recommended precision for the built-in case

Table 109-1
Unit: mm

Symbol \ Model	14	20	25	32	40	50
a	0.013	0.017	0.024	0.026	0.026	0.028
b	0.015	0.016	0.016	0.017	0.019	0.024
c	0.016	0.020	0.029	0.031	0.031	0.034
d	0.013	0.017	0.024	0.026	0.026	0.028
e	0.015	0.016	0.016	0.017	0.019	0.024
f	0.016	0.020	0.029	0.031	0.031	0.034
g	0.011	0.013	0.016	0.016	0.017	0.021
h	0.007	0.010	0.012	0.012	0.012	0.015

Precautions on installation

Fig. 109-2

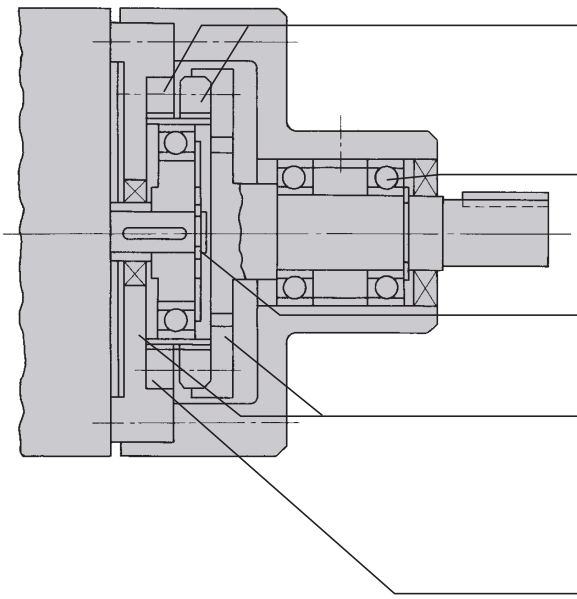

Installation dimension precision

The concentricity and verticality against the input shaft hole of both the circular spline and the wave generator shall be as follows.
Concentricity: 0.03mm (T, I, R)
Verticality: 0.05/100

Roller bearing

The input shaft and the output shaft shall be supported by two points with an appropriate roller bearing distance and structure to bear all the radial load and thrust load applied to the shaft.

Shaft direction stop

As a slight thrust load is generated on the wave generator, movement in the shaft direction must be stopped.

Shaft direction stop of the flexspline

As the flexspline is disposed to move to the circular spline S side or D side during operation, a stopper should be set to prevent the flexspline from leaning.
Recommended material and hardness for a stopper
S45C, H_B=260 to 290 (HRC 26.4 to 29.8)

Fixing the circular spline (for oil lubrication)

Fix circular spline S. As circular spline D does not have relative rotation for the flexspline, it should be noted that the flexspline does not rotate and may not be fully lubricated if the circular spline is fixed.

Lubrication

There are two types of lubrication; oil lubrication and grease lubrication. Although oil lubrication is common, grease lubrication is applicable to intermittent operation.

■Oil lubrication

1. Types of lubricant

See Page 018 for details of the lubricant.

2. Oil quantity

The oil level shall be the position shown in Table 110-1. Take action to increase the oil quantity as less oil can deteriorate the oil earlier.

Oil level position

Table 110-1
Unit: mm

Model	14	20	25	32	40	50
A	7	12	15	19	24	29

Fig. 110-1

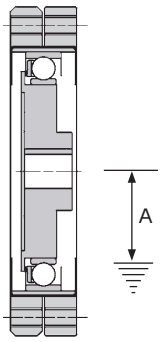

3. Replacement of oil

First time ..... 100 hours after starting operation
Second time and after..... Every 1000 operation hours or every 6 monthsNote that you should replace the oil earlier than specified if the operating condition is demanding.

■Grease lubrication

Different from oil lubrication, as a cooling effect is not expected from grease lubrication, it is only available for short operation.

- Operating condition: ED%... 10% or less, continuous operation for 10 minutes or less, the maximum permissible input rotational speed in Table 106-1 or less
- Recommended grease: ..... Harmonic grease® SK-1A for model numbers 20 to 100
  Harmonic grease® SK-2 for model number 14

(Note) If you use the product over ED% or the maximum permissible rotational speed, the grease will deteriorate, will not work as a lubricating mechanism and will result in damaging the reducer earlier. Extreme care should be taken.

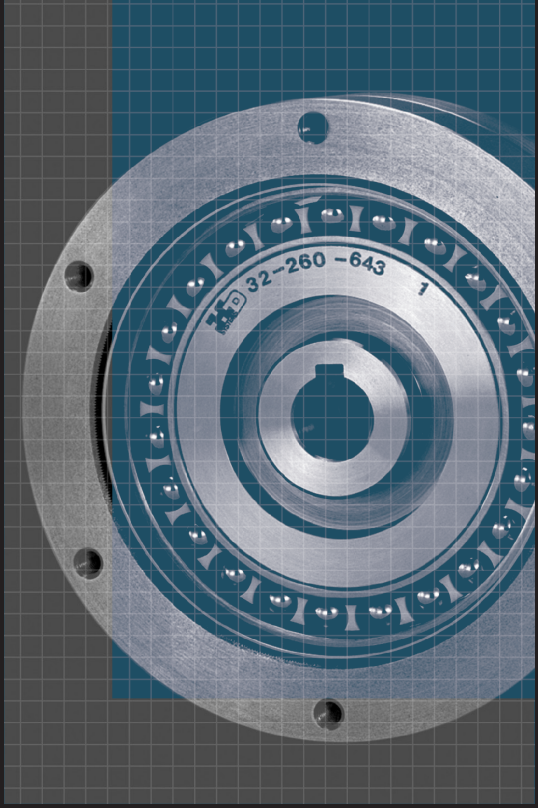

FR Series

Component Type FR

Features

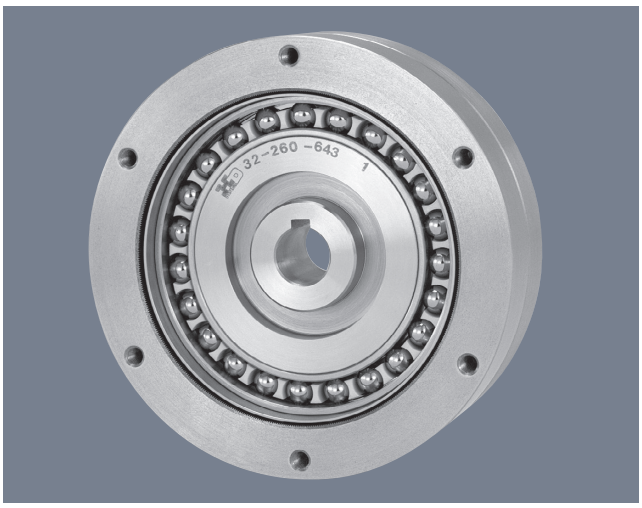

■FR series component type

The FR series component type is a flat, thin type for high torque. It consists of four parts like the FB series and operates using the same principle as the cup type.
It is basically structured in the same way as the FB series and supports high torque capacity by arranging the wave generator bearings in two lines and widening the tooth width of the circular spline and the flexspline.

Features of FR series

- ■Flat and thin shape
- ■High torque capacity
- ■Compact and simple design
- ■High positioning and rotational accuracies
- ■Coaxial input and output

Structure of the FR series component type

Fig. 112-1

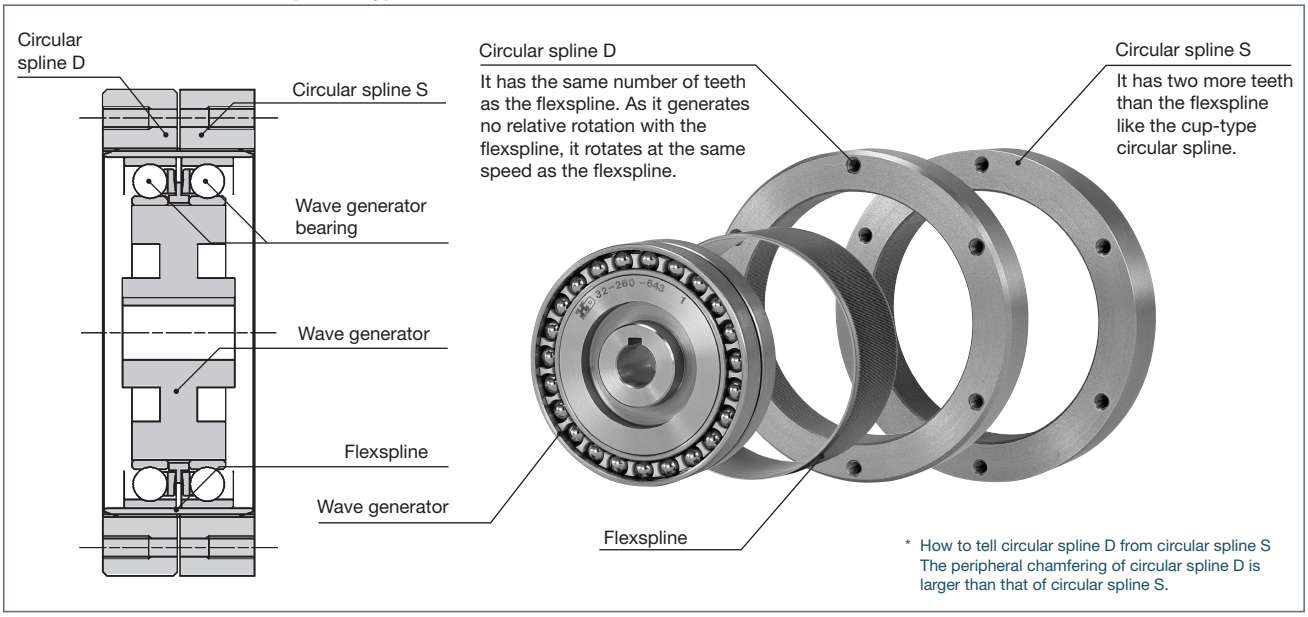

Model and symbol

FR - 20 - 80 - 2 - GR

Table 113-1

Model name	Model No.	Reduction ratio*																			Model	
FR	14	50	—	88	—	100	110	—	—	—	—	—	—	—	—	—	—	—	—	—	2= Component type	GR= New type * There is no G for Model 14
	20	50	—	80	—	100	—	—	128	—	—	—	160	—	—	—	—	—	—	—		
	25	50	—	80	—	100	—	120	—	—	—	—	160	—	200	—	—	—	—	—		
	32	50	78	—	—	100	—	—	—	131	157	—	—	—	200	—	—	—	260	—		
	40	50	—	80	—	100	—	—	128	—	—	—	160	—	200	—	—	258	—	—		
	50	—	—	80	—	100	—	120	—	—	—	—	160	—	200	—	242	—	—	—		
	65	—	78	—	—	—	104	—	—	—	132	158	—	—	—	208	—	—	260	—		
	80	—	—	80	96	—	—	—	128	—	—	—	160	194	—	—	—	258	—	320		
	100	—	—	80	—	100	—	120	—	—	—	—	160	—	200	—	242	—	—	320		

* The reduction ratio indicates the value for the following condition.
Input: wave generator, fixed: circular spline, output: flexspline

Rotational direction and reduction ratio

Fig. 113-1

(Note) Contact us if you use the product as Accelerator (5) and (6).

① 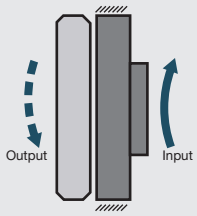

(1) Reducer
Input: Wave Generator
Output: Circular Spline D
Fixed: Circular Spline S
$i=\frac{-1}{R}$

② 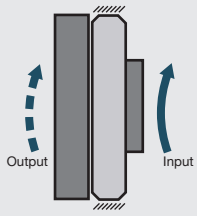

(2) Reducer
Input: Wave Generator
Output: Circular Spline S
Fixed: Circular Spline D
$i=\frac{1}{R+1}$

③ 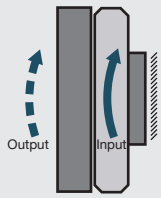

(3) Reducer
Input: Circular Spline D
Output: Circular Spline S
Fixed: Wave Generator
$i=\frac{R}{R+1}$

④ 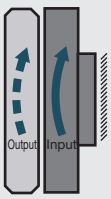

(4) Overdrive
Input: Circular Spline S
Output: Circular Spline D
Fixed: Wave Generator
$i=\frac{R+1}{R}$

⑤ 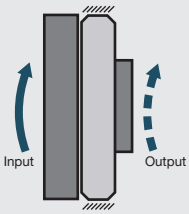

(5) Overdrive
Input: Circular Spline S
Output: Wave Generator
Fixed: Circular Spline D
$i=R+1$

⑥ 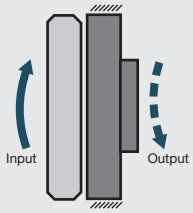

(6) Overdrive
Input: Circular Spline D
Output: Wave Generator
Fixed: Circular Spline S
$i=-R$

⑦ 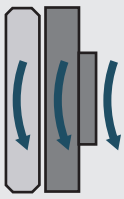

(7) Differential
When all of the Wave Generator, the Circular Spline S and the Circular Spline D rotate, Combinations (1) through (6) are available.

Technical Data

Rating table

Table 114-1

Model	Reduction ratio	Rated torque at input 2000r/min		Permissible peak torque at start/stop		Permissible max. value of ave. load torque		Instantaneous permissible max. torque		Rated input rotational speed	Permissible max. input rotational speed (r/min)		Permissible ave. input rotational speed (r/min)		Inertia moment	
		N·m	kgf·m	N·m	kgf·m	N·m	kgf·m	N·m	kgf·m	r/min	Oil lubricant	Grease lubricant	Oil lubricant	Grease lubricant	I $\times10^{-4}$kg·m^2	J $\times10^{-5}$kgf·ms^2
14	50	4.4	0.45	5.4	0.55	5.4	0.55	13.7	1.4	2000	6000	3600	4000	2500	0.060	0.061
	88	5.9	0.6	9.8	1.0	9.8	1.0	19.6	2.0*							
	100	7.8	0.8	13.7	1.4	9.8	1.0	19.6	2.0*							
	110	7.8	0.8	13.7	1.4	9.8	1.0	19.6	2.0*							
20	50	25	2.5	34	3.5	34	3.5	69	7.0	2000	6000	3600	3600	2500	0.32	0.33
	80	34	3.5	41	4.2	41	4.2	72	7.3							
	100	40	4.1	53	5.4	49	5.0	94	9.6							
	128	40	4.1	67	6.8	49	5.0	102	10.4*							
	160	40	4.1	77	7.9	49	5.0	86	8.8							
25	50	39	4.0	55	5.6	55	5.6	108	11.0	2000	5000	3600	3000	2500	0.7	0.71
	80	56	5.7	69	7.0	69	7.0	122	12.4							
	100	67	6.8	91	9.3	91	9.3	160	16.3							
	120	67	6.8	108	11.0	108	11.0	190	19.4							
	160	67	6.8	135	13.8	108	11.0	172	17.6*							
	200	67	6.8	147	15.0	108	11.0	172	17.6*							
32	50	76	7.8	108	11	108	11	216	22	2000	4500	3600	2500	2300	2.6	2.61
	78	108	11	137	14	137	14	245	25							
	100	137	14	176	18	176	18	323	33							
	131	137	14	255	26	216	22	451	46							
	157	137	14	294	30	216	22	500	51*							
	200	137	14	314	32	216	22	372	38*							
	260	137	14	314	32	216	22	372	38*							
40	50	137	14	196	20	196	20	353	36	2000	4000	3300	2000	2000	6.8	6.9
	80	196	20	245	25	245	25	431	44							
	100	255	26	314	32	314	32	549	56							
	128	294	30	392	40	392	40	686	70							
	160	294	30	461	47	451	46	813	83							
	200	294	30	529	54	451	46	745	76*							
	258	294	30	627	64	451	46	745	76*							
50	80	363	37	441	45	441	45	784	80	1700	3500	3000	1700	1700	21	21
	100	470	48	578	59	578	59	1019	104							
	120	559	57	696	71	696	71	1225	125							
	160	559	57	833	85	833	85	1470	150							
	200	559	57	960	98	843	86	1411	144*							
	242	559	57	1176	120	843	86	1411	144*							
65	78	745	76	921	94	921	94	1617	165	1400	3000	2200	1400	1400	76	78
	104	1070	109	1340	137	1340	137	2360	241							
	132	1070	109	1650	168	1570	160	2890	295							
	158	1070	109	1970	201	1570	160	3450	352*							
	208	1070	109	2180	222	1570	160	2590	264*							
	260	1070	109	2200	224	1570	160	2590	264*							
80	80	1320	135	1640	167	1640	167	2870	293	1200	2500	2000	1200	1200	213	217
	96	1660	169	2050	209	2050	209	3590	366							
	128	2300	235	2820	288	2830	289	4960	506							
	160	2350	240	3380	345	3130	319	5940	606							
	194	2350	240	4300	439	3130	319	6900	704*							
	258	2350	240	4350	444	3130	319	5170	528*							
	320	2350	240	4350	444	3130	319	5170	528*							
100	80	2330	238	2870	293	2870	293	5040	514	1000	2000	1700	1000	1000	635	648
	100	3200	327	3940	402	3940	402	6920	706							
	120	3890	397	4780	488	4780	488	8400	857							
	160	4470	456	6230	636	5720	584	10950	1117							
	200	4470	456	7090	723	5720	584	12440	1269							
	242	4470	456	7960	812	5720	584	9410	960*							
	320	4470	456	7960	812	5720	584	9410	960*							

* The value of asterisk is limited by ratcheting torque.

(Note) Inertia moment: $I=\frac{1}{4}GD^2$

Outline drawing

Fig. 115-1

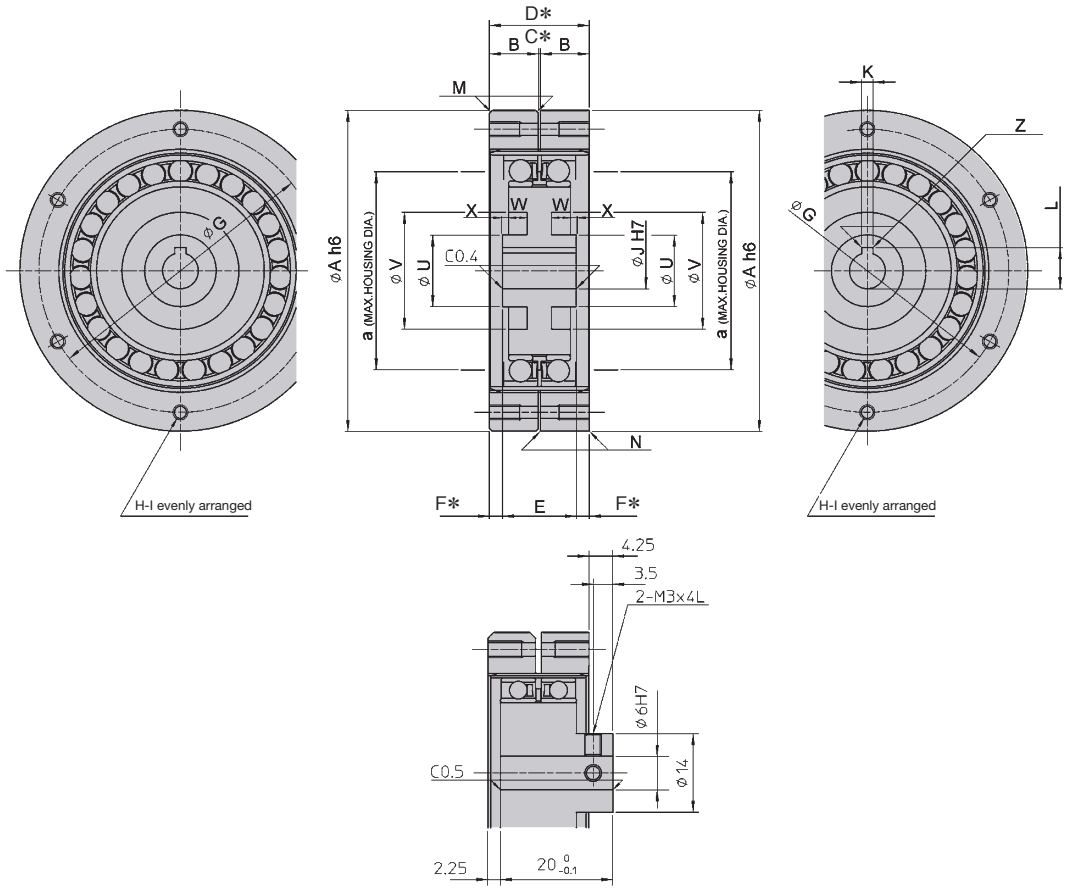

FR-14

* The allowance varies depending on the part manufacturing method (cast or machined products). Contact us if the allowance is not described in the dimensions and is required.

Measurement table

Table 115-1
Unit: mm

Symbol \ Model		14	20	25	32	40	50	65	80	100
ϕA (h6)		50	70	85	110	135	170	215	265	330
B		8.5	12	14	18	21	26	35	41	50
C*		1	1	1	1	1	1	1	1	1
D*		18	25	29	37	43	53	71	83	101
E $^{0}_{-0.1}$		—	17.3	20	25.9	31.5	39	50.5	62	77.2
F*		—	3.85	4.5	5.55	5.75	6.95	10.25	10.5	11.9
ϕG		44	60	75	100	120	150	195	240	290
H		6	6	6	6	6	6	6	8	8
I		M3×6	M3×6	M4×8	M5×10	M6×12	M8×16	M10×20	M10×20	M12×24
ϕJ (H7)	Standard	6	9	11	14	14	19	24	28	28
	Max. size	8	11	11	17	20	26	26	32	33
K (J_{S9})		—	3	4	5	5	6	8	8	8
L $^{+0.1}_{0}$		—	10.4	12.8	16.3	16.3	21.8	27.3	31.3	31.3
M		c1	c1	c1.5	c1.5	c1.5	c1.5	c1.5	c2	c2
N		c0.2	c0.2	c0.2	c0.2	c0.4	c0.4	c0.4	c0.4	c0.4
a		29	42	53	69	84	105	138	169	211
ϕU		—	—	22	28	32	38	44	52	58
ϕV		—	—	32	42	52	62	86	100	128
W		—	—	4.8	6.1	7.6	9.8	12.6	16	19.7
X		—	—	1.6	1.9	2.5	3.2	4.4	5.1	6.3
Z		—	R0.08～0.16	R0.08～0.16	R0.08～0.25	R0.08～0.25	R0.08～0.25	R0.08～0.25	R0.08～0.25	R0.08～0.25
Mass	kgf	0.2	0.5	0.8	1.7	3.0	6.0	12.0	22.3	42.6

(Note) For Circular spline D, the outer circumference is Size M.

- The C, D and F sizes indicated by an asterisk are the mounting positions in the shaft direction and allowance of the three parts (wave generator, flexspline, circular spline) comprising HarmonicDrive®. Strictly observe these sizes as they affect the performance and intensity.
- Four parts (wave generator, flexspline, circular spline D, circular spline S) are not built in when the product is delivered.

Efficiency characteristics

The efficiency varies depending on the following conditions.

- Reduction ratio
- Input rotational speed
- Load torque
- Temperature
- Lubrication condition (Type of lubricant and the quantity)

Measuring condition

Table 116-1

Built-in	Measurement by building the recommended built-in precision into the product		
Load torque	The rated torque shown in the ratings (see the page 114)		
Lubricating condition	Grease lubrication	Name	Harmonic grease® SK-1A
			Harmonic grease® SK-2
	Oil lubrication		Gear oil for industry 2 types
	Application quantity		Appropriate application quantity. (see the page 122)

* Contact us for oil lubrication.

■Efficiency correction coefficient

If the load torque is smaller than the rated torque, the efficiency value lowers. Obtain correction coefficient Ke from the efficiency correction coefficient graph of Graph 116-1 to obtain the efficiency using the following example of calculation.

Example of calculation

Efficiency η (%) under the following condition is obtained from the example of FR-20-80-2GR.
Input rotational speed: 1000 r/min
Load torque: 19.6 N·m
Lubrication method: Grease lubrication (Harmonic grease® SK-1A)
Lubricant temperature: 20°C
Since the rated torque of model number 20 with a reduction ratio of 80 is 34 N·m (Ratings: Page 114), the torque ratio α is 0.58. (α=19.6/34=0.58)

- The efficiency correction coefficient is Ke=0.86 from Graph 116-1.
- Efficiency η at load torque 19.6 N·m: η=Ke·η_R=0.86 x 65=56%

Efficiency correction coefficient

Graph 116-1

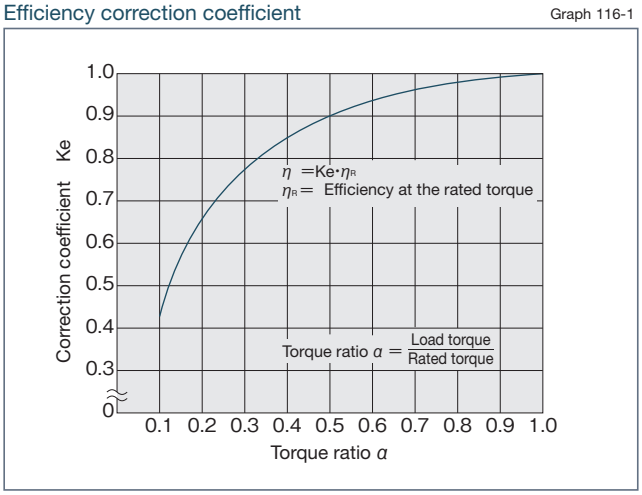

* Efficiency correction coefficient Ke=1 holds when the load torque is greater than the rated torque.

■Efficiency at rated torque (oil lubrication)

Input rotational speed: 500r/min

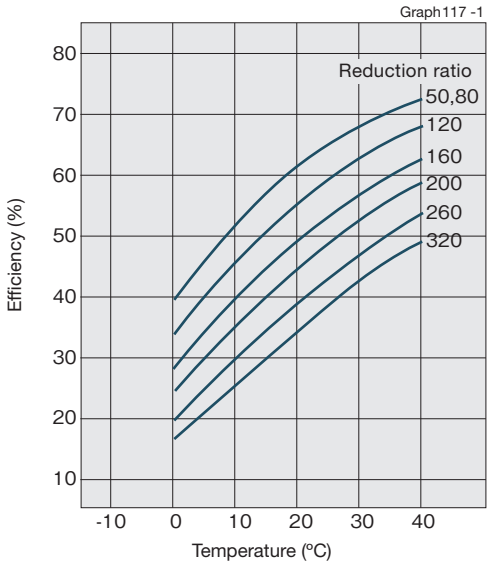

Input rotational speed: 1000r/min

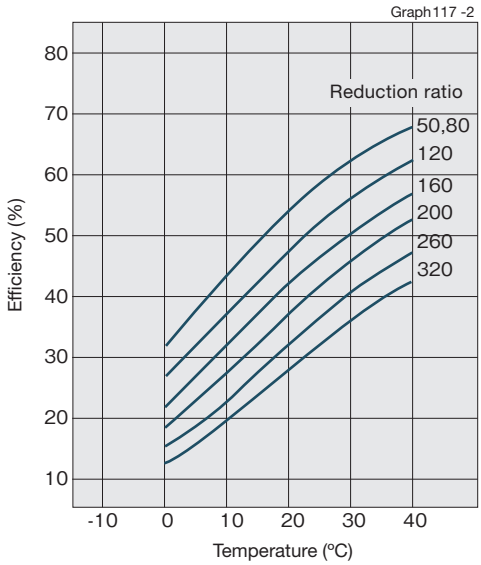

Input rotational speed: 2000r/min

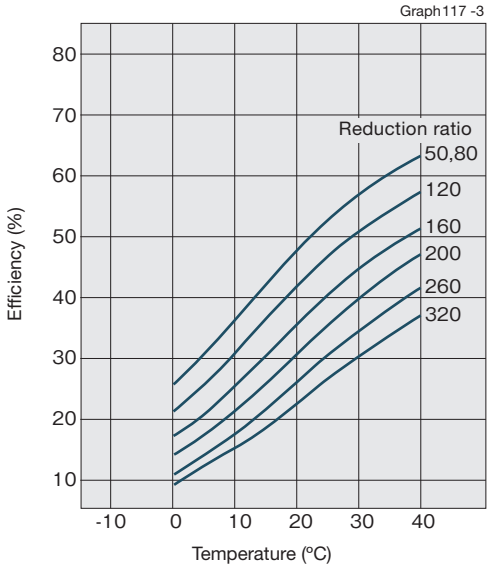

Input rotational speed: 3500r/min

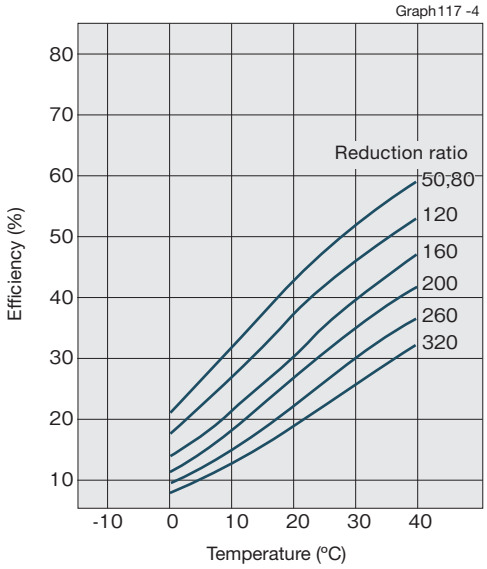

■Efficiency at rated torque (grease lubrication)

Input rotational speed: 500r/min

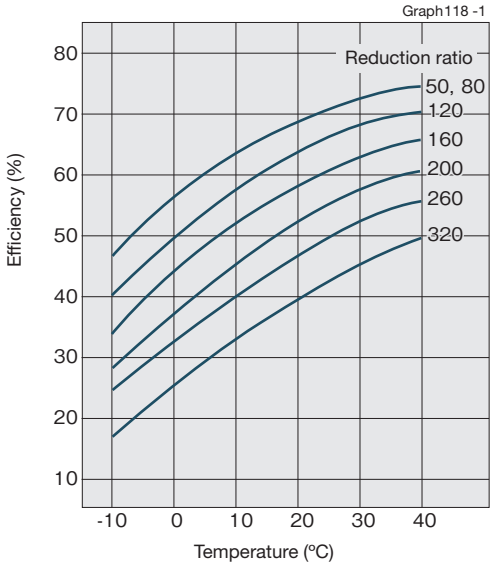

Input rotational speed: 1000r/min

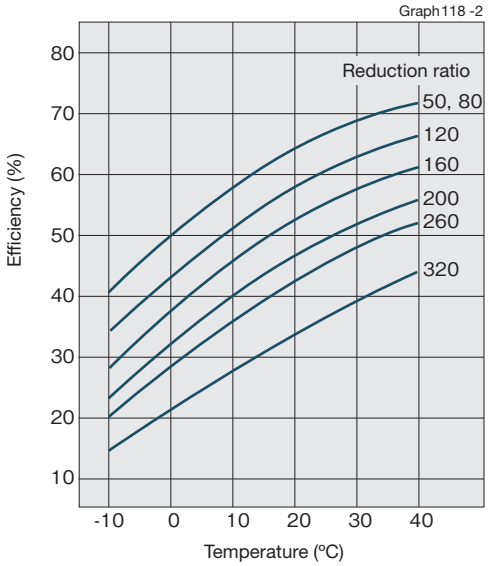

Input rotational speed: 2000r/min

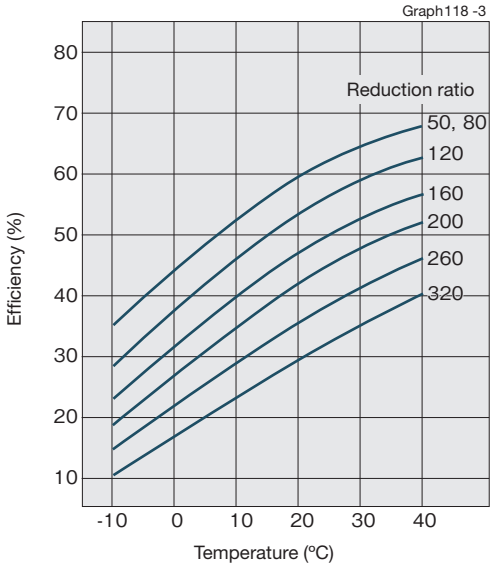

Input rotational speed: 3500r/min

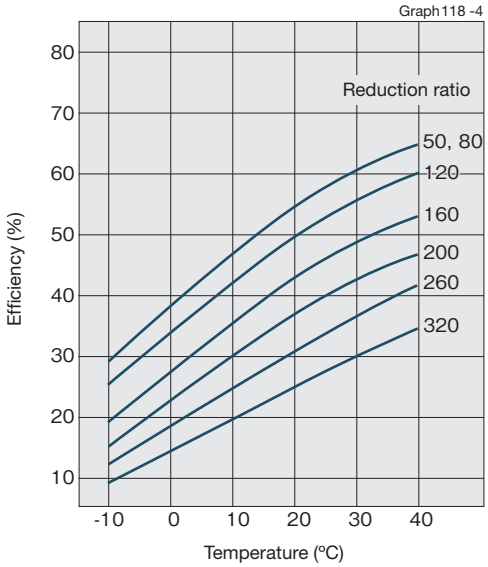

No-load running torque, starting torque, overdrive starting torque

Graph 119-1 shows the result of measurement when the component has been built in as the double shaft-type reducer. The values include frictional resistance due to the oil seal of the input and output shaft, and oil bath-type lubrication.

1. No-load running torque ..... This is the torque on the high-speed shaft required for rotation in a no-load condition. The value in the graph indicates the condition when the input rotational speed is 1500 r/min and the oil temperature is about 40°C.

2. Starting torque ..... This is the static torque required to start the high-speed shaft in a no-load condition.

3. Overdrive starting torque ... This is the static torque required to start the low-speed shaft in a no-load condition.

Running torque, starting torque, overdrive starting torque Graph 119-1

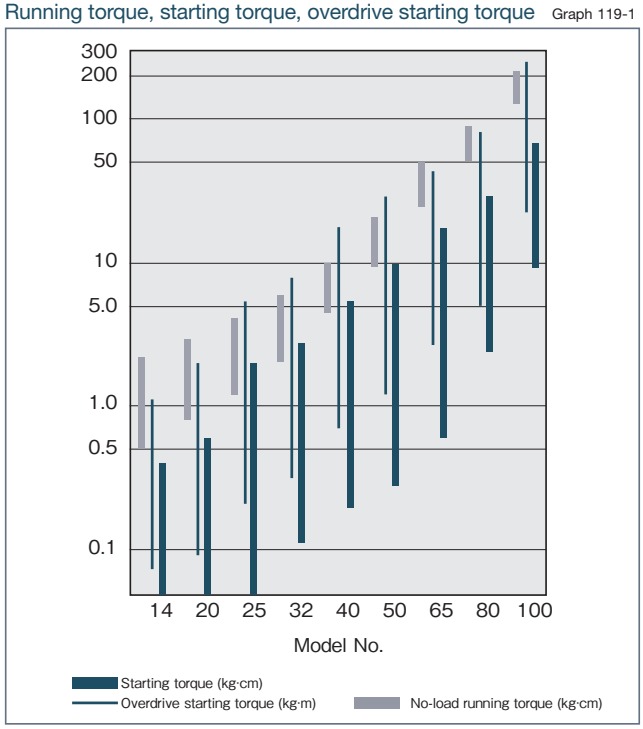

Lost motion and the spring constant

Lost motion and the spring constant of the pancake type is the value when either of the wave generator or the circular spline is fixed and when a torque is applied to another circular spline.

Table 120-1

Model No.	Lost motion		Spring constant	
	± Load (kg·m)	Lost motion (arc-min)	Load (kg·m)	Spring constant (kgf·m/arc-min)
14	0.04	3.0	1.26	0.3
20	0.12	3.0	3.69	0.9
25	0.23	3.0	7.20	2.1
32	0.46	3.0	15.78	4.4
40	0.92	3.0	29.50	7.8
50	1.73	3.0	57.60	16
65	3.9	3.0	126.7	27
80	7.4	3.0	236.2	52
100	14.4	3.0	460.8	100

■Description on lost motion and spring constant

As for the backlash specified in normal, HarmonicDrive® has unique teeth engagement theory. The teeth engagement ratio is high, approx. 10% of the total number of teeth and the value is extremely smaller in the standard specification due to the averaged pitch difference.
The lost motion value is used for the backlash of the pancake type HarmonicDrive®.

(1) Lost motion (L/M)

The lost motion is the total value of rotational angle of low-speed shaft when the high-speed shaft is fixed in rotational direction with the HarmonicDrive® installed and when slight load torque (see Table 120-1) is applied to the low-speed shaft the other way round.

(2) Spring constant

By increasing the load torque gradually in the same manner as the lost motion and applying the load the other way round, "load torque - torsional angle" diagram emerges as shown in Fig. 120-2. The average spring constant obtained by this diagram is shown in Table 120-1. (This value is only for the HarmonicDrive® components.)

Fig. 120-1

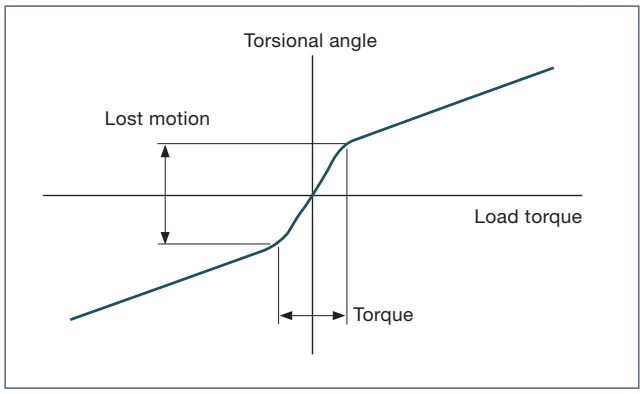

Fig. 120-2

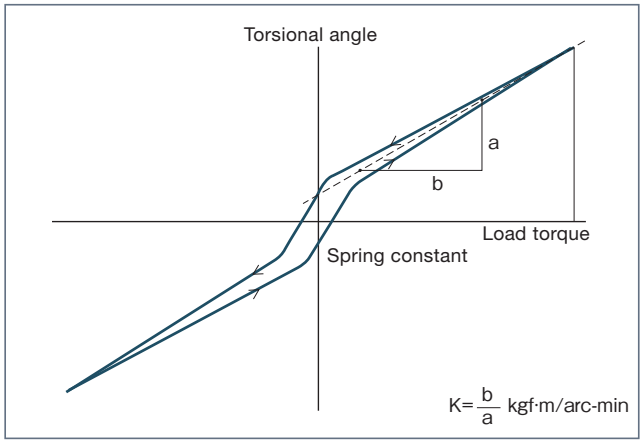

■Example of calculation

Use the HarmonicDrive® model number FR-40-160-2A-GR to fix the input shaft in rotational direction, and apply the load (30kgf·m) rated in the catalog to the output shaft, and then obtain the torsional angle.

$$\text{Torsional angle } \theta = \frac{L\cdot M}{2} + \frac{1}{K}(T - T_{L\cdot M})$$

$$= 1.5 + \frac{1}{7.8}(30 - 0.92)$$

$$= 5.23\text{arc-min}$$

Maximum value "θmax" when rotated the other way round is

$$\theta\text{max} = 2\cdot\theta = 10.46\text{arc-min}$$

Fig. 120-3

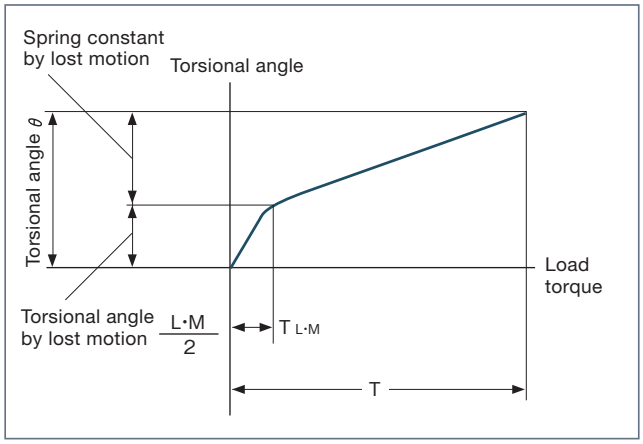

Design guide

Installation precision

Maintain the recommended precision shown in Figure 121-1 and Table 121-1 to fully bring out the excellent performance of HarmonicDrive® for built-in design.

Recommended precision for the built-in case

Fig. 121-1

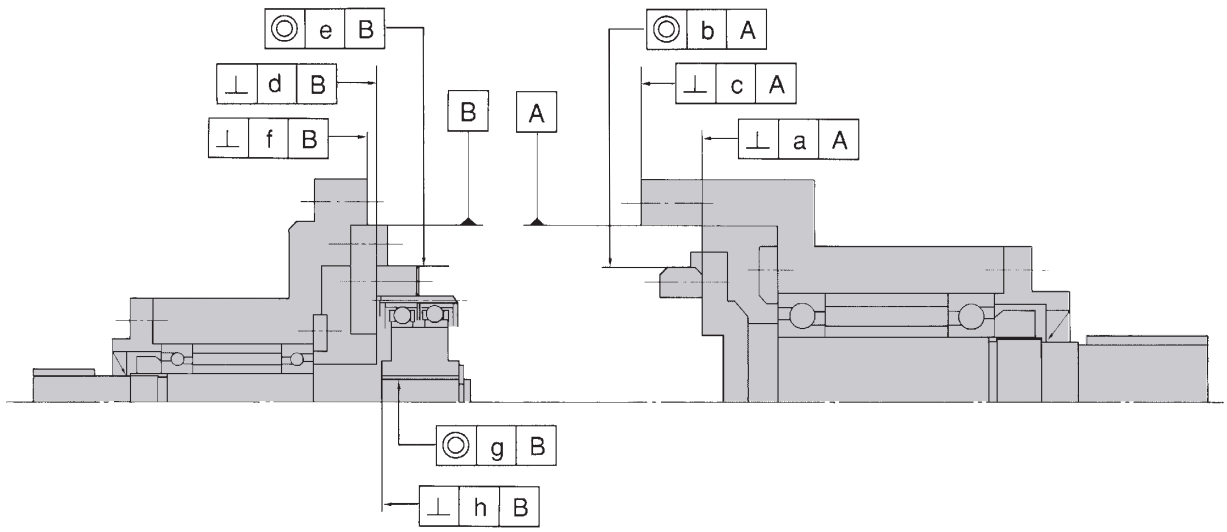

Recommended precision for the built-in case

Table 121-1
Unit: mm

Symbol \ Model	14	20	25	32	40	50	65	80	100
a	0.013	0.017	0.024	0.026	0.026	0.028	0.034	0.043	0.057
b	0.015	0.016	0.016	0.017	0.019	0.024	0.027	0.033	0.038
c	0.016	0.020	0.029	0.031	0.031	0.034	0.041	0.052	0.068
d	0.013	0.017	0.024	0.026	0.026	0.028	0.034	0.043	0.057
e	0.015	0.016	0.016	0.017	0.019	0.024	0.027	0.033	0.038
f	0.016	0.020	0.029	0.031	0.031	0.034	0.041	0.052	0.068
g	0.011	0.013	0.016	0.016	0.017	0.021	0.025	0.030	0.035
h	0.007	0.010	0.012	0.012	0.012	0.015	0.015	0.015	0.015

Installation of the circular spline

Conduct design and part control corresponding to the load condition for installation of the circular spline. Transmission torques by the recommended bolts and tightening torques are shown in the following table.

Installation with bolts

Table 121-2

Item \ Model		14	20	25	32	40	50	65	80	100
Number of bolts		6	6	6	6	6	6	6	8	8
Bolt size		M3	M3	M4	M5	M6	M8	M10	M10	M12
Installation of bolts: P.C.D.	mm	44	60	75	100	120	150	195	240	290
Bolt tightening torque	N·m	2.0	2.0	4.5	9.0	15.3	37	74	74	128
	kgf·m	0.20	0.20	0.46	0.92	1.56	3.8	7.5	7.5	13.1
Bolt transmission torque	N·m	54	74	159	338	573	1300	2680	4410	7750
	kgf·m	5.5	7.5	16	34	58	132	273	450	790

(Table 121-1/Notes)
1. It is assumed that the material of the female screws can endure the bolt tightening torque.
2. Recommended bolt Bolt name: JIS B 1176 hexagonal bolt Intensity type: JIS B 1051 12.9 or more
3. Torque efficiency: K=0.2
4. Tightening efficiency: A=1.4
5. Tightening friction coefficient μ=0.15

Precautions on assembly

Fig. 122-1

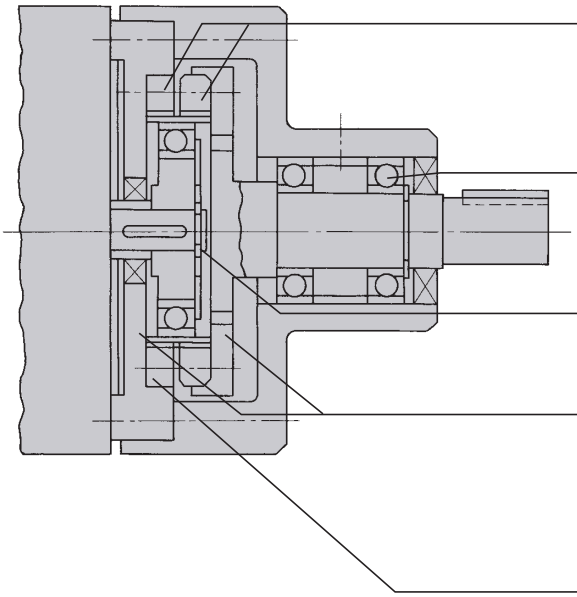

Installation dimension precision

The concentricity and verticality against the input shaft hole of both the circular spline and the wave generator shall be as follows.
Concentricity: 0.03mm (T, I, R)
Verticality: 0.05/100

Roller bearing

The input shaft and the output shaft shall be supported by two points with an appropriate roller bearing distance and structure to bear all the radial load and thrust load applied to the shaft.

Shaft direction stop

As a slight thrust load is generated on the wave generator, movement in the shaft direction must be stopped.

Shaft direction stop of the flexspline

As the flexspline is disposed to move to the circular spline S side or D side during operation, a stopper should be set to prevent the flexspline from leaning.
Recommended material and hardness for a stopper
S45C, H_B=260 to 290 (HRC 26.4 to 29.8)

Fixing the circular spline (for oil lubrication)

Fix circular spline S. As circular spline D does not have relative rotation for the flexspline, it should be noted that the flexspline does not rotate and may not be fully lubricated if the circular spline is fixed.

Lubrication

There are two types of lubrication; oil lubrication and grease lubrication. Although oil lubrication is common, grease lubrication is applicable to intermittent operation.

■Oil lubrication

1. Type of lubricant

It is same with lubrication of Cup type HarmonicDrive® (Page 018).

2. Oil quantity

The oil level shall be the position shown in Table 122-1.

Fig. 122-2

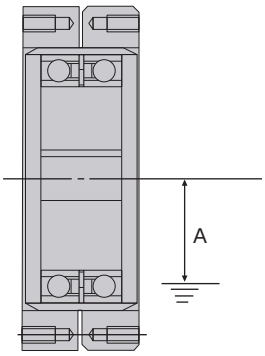

Oil level position

Table 122-1
Unit: mm

Model	14	20	25	32	40	50	65	80	100
A	7	12	15	31	38	44	62	75	94

■Grease lubrication

Different from oil lubrication, as a cooling effect is not expected from grease lubrication, it is only available for short operation.

- Operating condition: ED%... 10% or less, continuous operation for 10 minutes or less, the maximum permissible input rotational speed in Table 114-1 or less
- Recommended grease: ..... Harmonic grease® SK-1A for model numbers 20 to 100
  Harmonic grease® SK-2 for model number 14

(Note) If you use the product over ED% or the maximum permissible rotational speed, the grease will deteriorate, will not work as a lubricating mechanism and will result in damaging the reducer earlier. Extreme care should be taken.

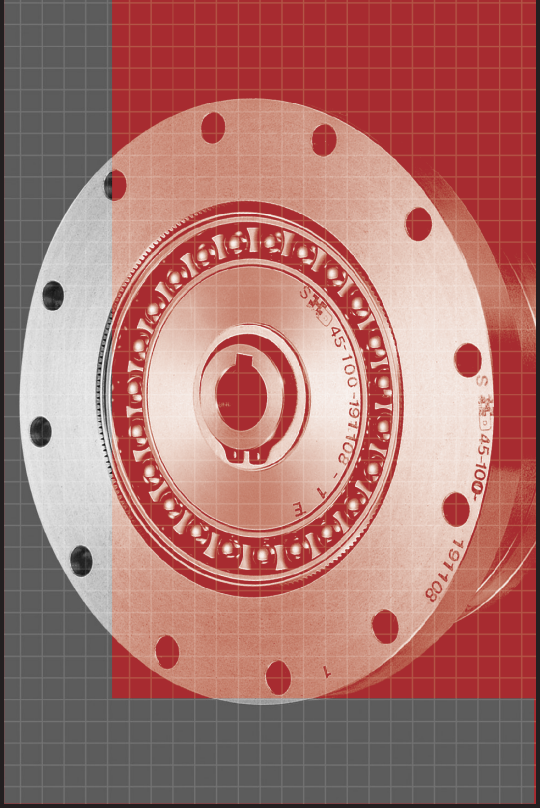

CSG/CSF Series

Unit Type CSG/CSF

Features

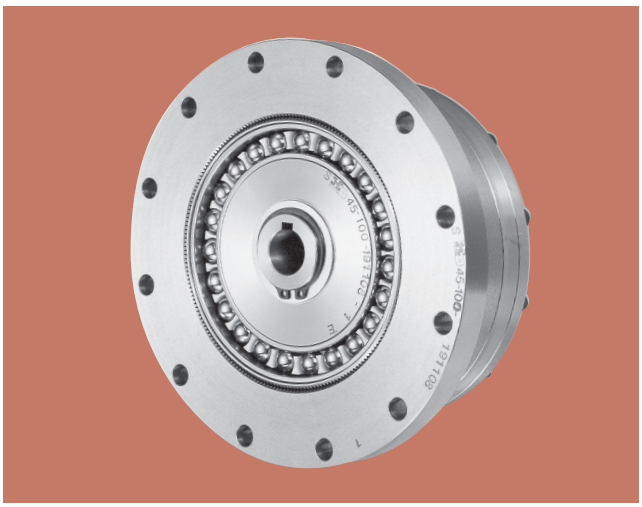

■CSG/CSF series unit type

The CSG/CSF series unit type provides a full product lineup and allows customers to select models most suited to their requirements to be provided for needs demanding accelerated technical innovation such as high performance, high speed, high load capacity, high density and miniaturization.
The CSG/CSF series unit type is a unitized product based on the component type for easy handling. An accurate, highly rigid cross roller bearing is built in to directly support (main roller bearing) the external load.

Features of CSG/CSF series

- ■Compact and simple design
- ■High torque capacity
- ■High stiffness
- ■Non-backlash
- ■High positioning and rotational accuracies
- ■Coaxial input and output

New variations

CSG series: for high torque
- Torque capacity has been improved by 30% compared to the CSF series.
- The life has been improved by 43% (10,000 hours) compared to the CSF series.

Reduction ratio of 30: for high-speed
- A reduction ratio of 30 has been achieved, keeping the merits of non-backlash HarmonicDrive®.

CSG/CSF-LW series: Light weight type
- New shape design and new lightweight materials contribute to weight reduction by about 30 percent.
- Same level or rating torque and performance as CSF series.
- Speeding up and enhancing weight capacity of robot.

Structure of CSG/CSF series unit type

Fig. 124-1

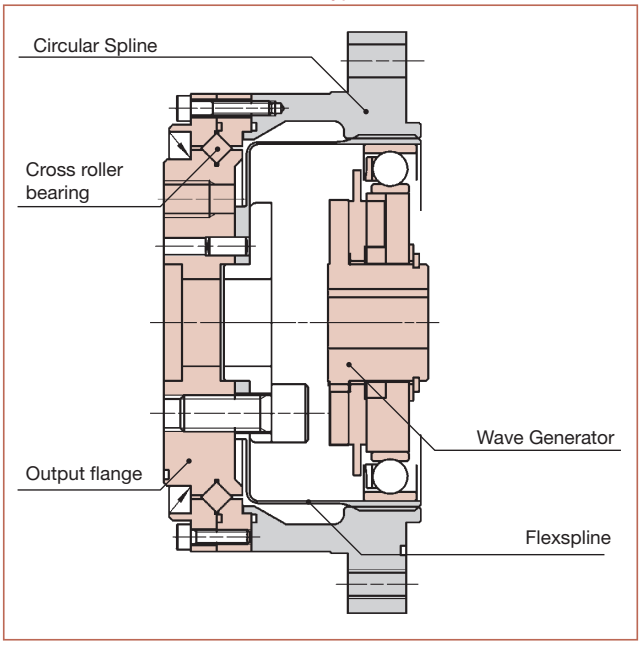

Comparison between CSG series and CSF series

Graph 124-1

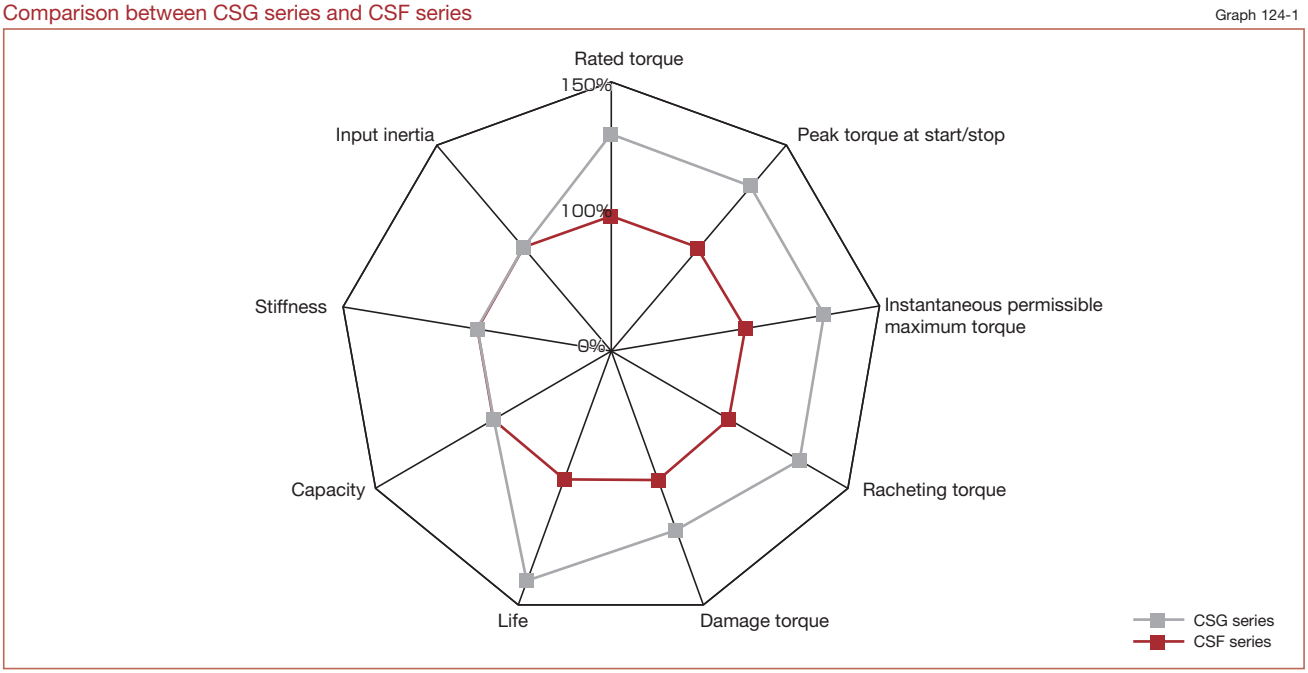

Model and Symbol

CSG - 25 - 100 - 2UH - SP1 - SP2

Table 125-1

Model name	Model No.	Reduction ratio*					Model	Special specification
CSG	14	50	80	100	—	—	2A= Component type 2UH= Unit type	LW=Light weight type SP=Special specifications such as shapes and performance None=Standard product
	17	50	80	100	120	—		
	20	50	80	100	120	160		
	25	50	80	100	120	160		
	32	50	80	100	120	160		
	40	50	80	100	120	160		
	45	50	80	100	120	160		
	50	—	80	100	120	160		
	58	—	80	100	120	160		
	65	—	80	100	120	160		

* The reduction ratio indicates the value for the following condition.
Input: wave generator, fixed: circular spline, output: flexspline

CSF - 25 - 100 - 2UH - SP1 - SP2

Table 125-2

Model name	Model No.	Reduction ratio*						Model	Special specification
CSF	14	30	50	80	100	—	—	2A= Component type 2UH= Unit type	LW=Light weight type SP=Special specifications such as shapes and performance None=Standard product
	17	30	50	80	100	120	—		
	20	30	50	80	100	120	160		
	25	30	50	80	100	120	160		
	32	30	50	80	100	120	160		
	40	—	50	80	100	120	160		
	45	—	50	80	100	120	160		
	50	—	50	80	100	120	160		
	58	—	50	80	100	120	160		
	65	—	50	80	100	120	160		

* The reduction ratio indicates the value for the following condition.
Input: wave generator, fixed: circular spline, output: flexspline

Technical Data

Rating table

CSG Series

Table 126-1

Model	Reduction ratio	Rated torque at input 2000r/min		Permissible peak torque at start/stop		Permissible max. value of ave. load torque		Instantaneous permissible max. torque		Permissible max. input rotational speed (r/min)	Permissible ave. input rotational speed (r/min)	Inertia moment	
		N·m	kgf·m	N·m	kgf·m	N·m	kgf·m	N·m	kgf·m	Grease lubricant	Grease lubricant	I $\times10^{-4}$kg·m^2	J $\times10^{-5}$kgf·ms^2
14	50	7.0	0.7	23	2.3	9	0.9	46	4.7	8500	3500	0.033	0.034
	80	10	1.0	30	3.1	14	1.4	58*3	5.9*3				
	100	10	1.0	36	3.7	14	1.4	58*3	5.9*3				
17	50	21	2.1	44	4.5	34	3.4	91	9	7300	3500	0.079	0.081
	80	29	2.9	56	5.7	35	3.6	109*3	11*3				
	100	31	3.2	70	7.2	51	5.2	109*3	11*3				
	120	31	3.2	70	7.2	51	5.2	109*3	11*3				
20	50	33	3.3	73	7.4	44	4.5	127	13	6500	3500	0.193	0.197
	80	44	4.5	96	9.8	61	6.2	165	17				
	100	52	5.3	107	10.9	64	6.5	191	20				
	120	52	5.3	113	11.5	64	6.5	191	20				
	160	52	5.3	120	12.2	64	6.5	191	20				
25	50	51	5.2	127	13	72	7.3	242	25	5600	3500	0.413	0.421
	80	82	8.4	178	18	113	12	332	34				
	100	87	8.9	204	21	140	14	369	38				
	120	87	8.9	217	22	140	14	395*4	40*4				
	160	87	8.9	229	23	140	14	408*4	42*4				
32	50	99	10	281	29	140	14	497	51	4800	3500	1.69	1.72
	80	153	16	395	40	217	22	738	75				
	100	178	18	433	44	281	29	841	86				
	120	178	18	459	47	281	29	842	86				
	160	178	18	484	49	281	29	842	86				
40	50	178	18	523	53	255	26	892	91	4000	3000	4.50	4.59
	80	268	27	675	69	369	38	1270	130				
	100	345	35	738	75	484	49	1400	143				
	120	382	39	802	82	586	60	1510*4	154*4				
	160	382	39	841	86	586	60	1510*4	154*4				
45	50	229	23	650	66	345	35	1235	126	3800	3000	8.68	8.86
	80	407	41	918	94	507	52	1651	168				
	100	459	47	982	100	650	66	2041	208				
	120	523	53	1070	109	806	82	2288	233				
	160	523	53	1147	117	819	84	2483	253				
50	80	484	49	1223	125	675	69	2418	247	3500	2500	12.5	12.8
	100	611	62	1274	130	866	88	2678	273				
	120	688	70	1404	143	1057	108	2678	273				
	160	688	70	1534	156	1096	112	3185	325				
58	80	714	73	1924	196	1001	102	3185	325	3000	2200	27.3	27.9
	100	905	92	2067	211	1378	141	4134	422				
	120	969	99	2236	228	1547	158	4329	441				
	160	969	99	2392	244	1573	160	4459	455				
65	80	969	99	2743	280	1352	138	4836	493	2800	1900	46.8	47.8
	100	1236	126	2990	305	1976	202	6175	630				
	120	1236	126	3263	333	2041	208	6175	630				
	160	1236	126	3419	349	2041	208	6175	630				

(Note) 1. Inertia moment: $I=\frac{1}{4}GD^2$
2. See "Engineering data" on Page 012 for details of the terms.
3. The value of permissible maximum momentary torque is limited by the transmission torque of the unit (See Table 138-1, 2 on Page 138.).
4. When using LW series, see the transmission torque of the unit (Table 138-3, 4 on Page 138.) for the permissible maximum momentary torque.

CSF Series

Table127 -1

Model	Reduction ratio	Rated torque at input 2000r/min		Permissible peak torque at start/stop		Permissible max. value of ave. load torque		Instantaneous permissible max. torque		Permissible max. input rotational speed (r/min)	Permissible ave. input rotational speed (r/min)	Inertia moment	
		N·m	kgf·m	N·m	kgf·m	N·m	kgf·m	N·m	kgf·m	Grease lubricant	Grease lubricant	I $\times10^{-4}$kg·m^2	J $\times10^{-5}$kgf·ms^2
14	30	4.0	0.41	9.0	0.92	6.8	0.69	17	1.7	8500	3500	0.033	0.034
	50	5.4	0.55	18	1.8	6.9	0.70	35	3.6				
	80	7.8	0.80	23	2.4	11	1.1	47	4.8				
	100	7.8	0.80	28	2.9	11	1.1	54	5.5				
17	30	8.8	0.90	16	1.6	12	1.2	30	3.1	7300	3500	0.079	0.081
	50	16	1.6	34	3.5	26	2.6	70	7.1				
	80	22	2.2	43	4.4	27	2.7	87	8.9				
	100	24	2.4	54	5.5	39	4.0	108	11				
	120	24	2.4	54	5.5	39	4.0	86	8.8				
20	30	15	1.5	27	2.8	20	2.0	50	5.1	6500	3500	0.193	0.197
	50	25	2.5	56	5.7	34	3.5	98	10				
	80	34	3.5	74	7.5	47	4.8	127	13				
	100	40	4.1	82	8.4	49	5.0	147	15				
	120	40	4.1	87	8.9	49	5.0	147	15				
	160	40	4.1	92	9.4	49	5.0	147	15				
25	30	27	2.8	50	5.1	38	3.9	95	9.7	5600	3500	0.413	0.421
	50	39	4.0	98	10	55	5.6	186	19				
	80	63	6.4	137	14	87	8.9	255	26				
	100	67	6.8	157	16	108	11	284	29				
	120	67	6.8	167	17	108	11	304	31				
	160	67	6.8	176	18	108	11	314	32				
32	30	54	5.5	100	10	75	7.7	200	20	4800	3500	1.69	1.72
	50	76	7.8	216	22	108	11	382	39				
	80	118	12	304	31	167	17	568	58				
	100	137	14	333	34	216	22	647	66				
	120	137	14	353	36	216	22	686	70				
	160	137	14	372	38	216	22	686	70				
40	50	137	14	402	41	196	20	686	70	4000	3000	4.50	4.59
	80	206	21	519	53	284	29	980	100				
	100	265	27	568	58	372	38	1080	110				
	120	294	30	617	63	451	46	1180	120				
	160	294	30	647	66	451	46	1180	120				
45	50	176	18	500	51	265	27	950	97	3800	3000	8.68	8.86
	80	313	32	706	72	390	40	1270	130				
	100	353	36	755	77	500	51	1570	160				
	120	402	41	823	84	620	63	1760	180				
	160	402	41	882	90	630	64	1910	195				
50	50	122	12	715	73	175	18	1430	146	3500	2500	12.5	12.8
	80	372	38	941	96	519	53	1860	190				
	100	470	48	980	100	666	68	2060	210				
	120	529	54	1080	110	813	83	2060	210				
	160	529	54	1180	120	843	86	2450	250				
58	50	176	18	1020	104	260	27	1960	200	3000	2200	27.3	27.9
	80	549	56	1480	151	770	79	2450	250				
	100	696	71	1590	162	1060	108	3180	325				
	120	745	76	1720	176	1190	121	3330	340				
	160	745	76	1840	188	1210	123	3430	350				
65	50	245	25	1420	145	360	37	2830	289	2800	1900	46.8	47.8
	80	745	76	2110	215	1040	106	3720	380				
	100	951	97	2300	235	1520	155	4750	485				
	120	951	97	2510	256	1570	160	4750	485				
	160	951	97	2630	268	1570	160	4750	485				

(Note) 1. Inertia moment: $I=\frac{1}{4}GD^2$
2. See “Engineering data” on Page 012 for details of the terms.

Outline drawing

You can download the CAD data (DXF) of this product from the following homepage.
URL: https://www.hds.co.jp/

Fig. 128-1

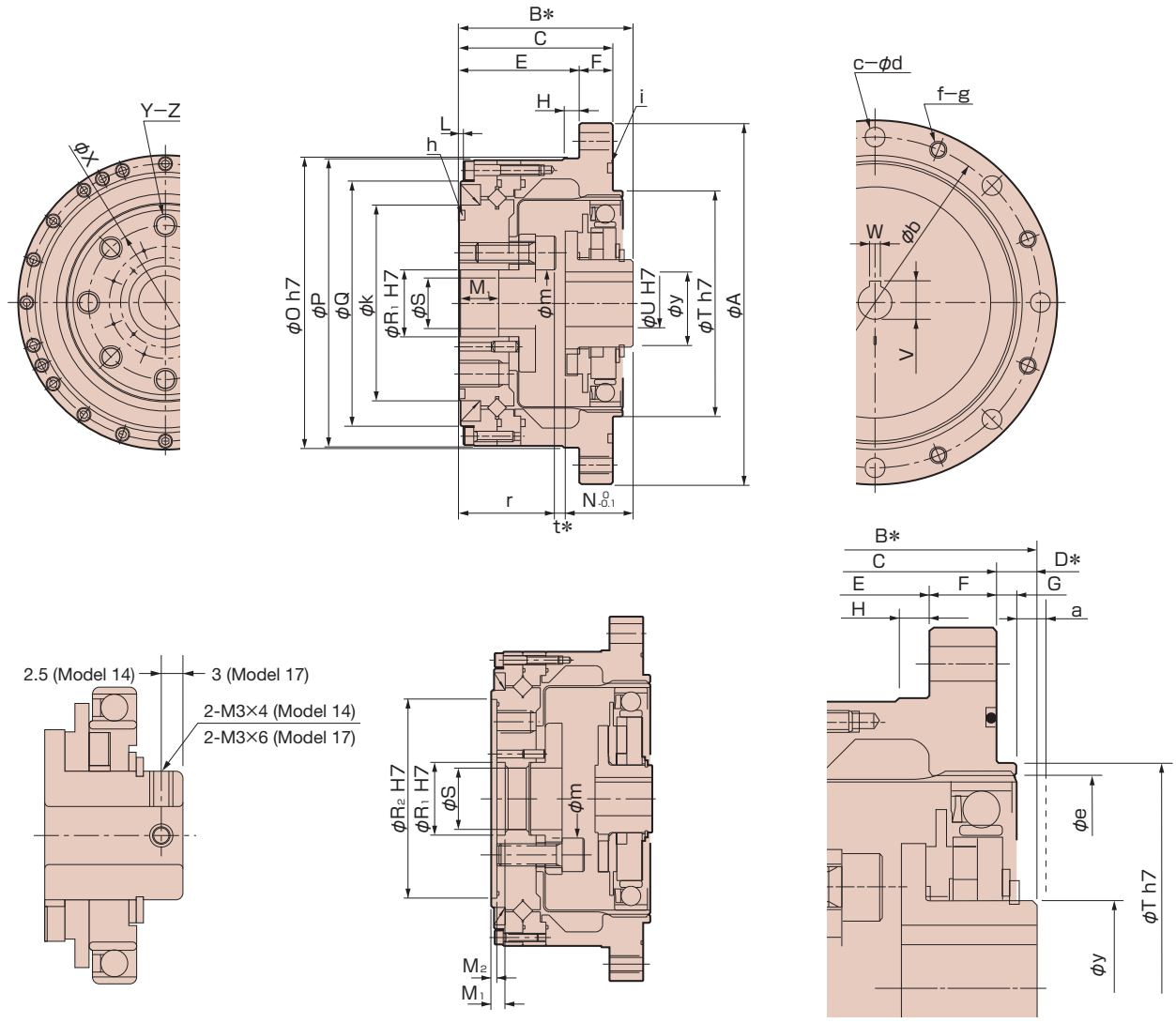

The shape of the wave generator of model numbers 14 and 17 (without a key groove)

The shape on the output side of model number 65

Enlarged view of the input side

(Note) The shape of φ S portion is pass-through hole.

(Note) Note that the length of the path of contact of the bolt will be within the depth of the female screw. If the length exceeds the size indicated by the symbol, Z, it will damage the flexspline.

* The shape of the output flange may vary depending on the model number. Contact our office for details.
* Check with the delivered specifications for details of the sizes. * See Fig. 040-3 on Page 040 for the shapes of the wave generator.
* The allowance varies depending on the part manufacturing method (cast or machined products). Contact us if the allowance is not described in the dimensions and is required.

Measurement table

Table 129-1
Unit: mm

Symbol \ Model		14	17	20	25	32	40	45	50	58	65
ϕA		73	79	93	107	138	160	180	190	226	260
B*		41 $^{0}_{-0.9}$	45 $^{0}_{-0.9}$	45.5 $^{0}_{-1.0}$	52 $^{0}_{-1.0}$	62 $^{0}_{-1.1}$	72.5 $^{0}_{-1.1}$	79.5 $^{0}_{-1.2}$	90 $^{0}_{-1.3}$	104.5 $^{0}_{-1.3}$	115 $^{0}_{-1.3}$
C		34	37	38	46	57	66.5	74	85	97	108.5
D*	CSG Series CSG-LW Series	7 $^{0}_{-0.4}$	8 $^{0}_{-0.4}$	7.5 $^{0}_{-0.4}$	6 $^{0}_{-0.5}$	5 $^{0}_{-0.6}$	6 $^{0}_{-0.6}$	5.5 $^{0}_{-0.6}$	5 $^{0}_{-0.6}$	7.5 $^{0}_{-0.6}$	6.5 $^{0}_{-0.6}$
	CSF Series CSF-LW Series	7 $^{0}_{-0.8}$	8 $^{0}_{-0.9}$	7.5 $^{0}_{-1.0}$	6 $^{0}_{-1.0}$	5 $^{0}_{-1.1}$	6 $^{0}_{-1.1}$	5.5 $^{0}_{-1.2}$	5 $^{0}_{-1.3}$	7.5 $^{0}_{-1.3}$	6.5 $^{0}_{-1.3}$
E		27	29	28	36	45	50.5	58	69	77	84.5
F		7	8	10	10	12	16	16	16	20	24
G		2	2	3	3	3	4	4	4	5	5
H	CSG Series	3.5	4	5	5	5	5	6	6	6	6
	CSG-LW Series	4	4	5	5	5	5	6	6	6	6
	CSF Series	3.5	4	5	5	5	5	6	6	6	6
	CSF-LW Series	4	4	5	5	5	5	6	6	6	6
L	CSG Series	0.5	0.5	0.5	0.5	1	1.5	1	1	1.5	1.5
	CSG-LW Series	1.1	1.1	1.1	1.1	1.2	1.6	1.6	1	1.5	1.5
	CSF Series	0.5	1.1	1.1	1.1	1.2	1.6	1.6	1	1.5	1.5
	CSF-LW Series	1.1	1.1	1.1	1.1	1.2	1.6	1.6	1	1.5	1.5
M1		9.4	9.5	9	12	15	5	6	8	10	10
M2		—	—	—	—	—	—	—	—	—	4
N $^{0}_{-0.1}$	CSG Series CSG-LW Series	18.5	20.7	21.5	21.6	23.6	29.7	30.5	34.8	38.3	44.6
	CSF Series CSF-LW Series	17.6	19.5	20.1	20.2	22	27.5	27.9	32	34.9	40.9
ϕO h7		56	63	72	86	113	127	148	158	186	212
ϕP	CSG Series	56	62	70	85	112	123	147	157	185	210
	CSG-LW Series	54.6	61.6	69.6	85	110	124.5	143	155	183.4	208.4
	CSF Series	55	62	70	85	112	123	147	157	185	210
	CSF-LW Series	54.6	61.6	69.6	85	110	124.5	143	155	183.4	208.4
ϕQ	CSG Series	42.5	49.5	58	73	96	109	127	137	161	186
	CSG-LW Series	40.5	47.5	55.5	71	91.1	103	123	130	155	180
	CSF Series	42.5	49.5	58	73	96	109	127	137	161	186
	CSF-LW Series	40.5	47.5	55.5	71	91.1	103	123	130	155	180
ϕR1 H7		11	10	14	20	26	32	32	40	46	52
ϕR2 H7		—	—	—	—	—	—	—	—	—	142
ϕS		8	7	10	15	20	24	25	32	38	44
ϕT h7		38	48	56	67 (68)	90	110	124	135	156	177
ϕU	Standard (H7)	6	8	12	14	14	14	19	19	22	24
	Max. size	8	10	13	15	15	20	20	20	25	30
V		—	—	13.8 $^{+0.1}_{0}$	16.3 $^{+0.1}_{0}$	16.3 $^{+0.1}_{0}$	16.3 $^{+0.1}_{0}$	21.8 $^{+0.1}_{0}$	21.8 $^{+0.1}_{0}$	24.8 $^{+0.1}_{0}$	27.3 $^{+0.2}_{0}$
W Js9		—	—	4	5	5	5	6	6	6	8
ϕX		23	27	32	42	55	68	82	84	100	110
Y		6	6	8	8	8	8	8	8	8	8
Z		M4×8	M5×10	M6×9	M8×12	M10×15	M10×15	M12×18	M14×21	M16×24	M16×24
a		1	1	1.5	1.5	1.5	2	2	2	2.5	2.5
ϕb		65	71	82	96	125	144	164	174	206	236
c	CSG Series	8	8	8	10	12	10	12	14	12	8
	CSG-LW Series	6	8	8	10	12	10	16	18	16	12
	CSF Series	6	6	6	8	12	8	12	12	12	8
	CSF-LW Series	6	8	8	10	12	10	16	18	16	12
ϕd		4.5	4.5	5.5	5.5	6.6	9	9	9	11	14
ϕe		38	45	53	66	86	106	119	133	154	172
f	CSG Series	8	8	8	10	12	10	12	14	12	8
	CSG-LW Series	6	8	8	10	12	10	16	18	16	12
	CSF Series	6	6	6	8	12	8	12	12	12	8
	CSF-LW Series	6	8	8	10	12	10	16	18	16	12
g		M4	M4	M5	M5	M6	M8	M8	M8	M10	M12
h		29.0×0.50	34.5×0.80	40.64×1.14	53.28×0.99	S71	AS568-042	S100	S105	S125	S135
i		S50	S56	S67	S80	S105	S125	S145	S155	S180	S205
ϕk		31	38	45	58	78	90	107	112	135	155
ϕm		10	10.5	15.5	20	27	34	36	39	46	56
r		21.4	23.5	23	29	37	39.5	45.5	53	62.8	66.5
t*	CSG Series CSG-LW Series	1.1	0.8	1	1.4	1.4	3.3	3.5	2.2	3.4	3.9
	CSF Series CSF-LW Series	2	2	2.4	2.8	3	5.5	6.1	5	6.8	7.6
ϕy		14	18	21	26	26	32	32	32	40	48
Mass (kg)	CSG Series	0.52	0.68	0.98	1.5	3.2	5.0	7.0	8.9	14.6	20.9
	CSG-LW Series	0.32	0.46	0.64	1.1	2.2	3.5	5.1	7	11.3	16.2
	CSF Series	0.52	0.68	0.98	1.5	3.2	5.0	7.0	8.9	14.6	20.9
	CSF-LW Series	0.32	0.46	0.64	1.1	2.2	3.5	5.1	7	11.3	16.2

(note) the dimension in parenthesis is for reduction ratio 30.

- The B, D and t sizes indicated by an asterisk are the mounting positions in the shaft direction and allowance of the three parts (wave generator, flexspline, circular spline) comprising HarmonicDrive®. Strictly observe these sizes as they affect the performance and intensity.
- Wave generator is removed when the product is delivered.

Angle transmission accuracy

See "Engineering data" for a description of terms.

Table 130-1
Unit: $\times 10^{-4}$rad (arc-min)

Reduction ratio	Specification \ Model		14	17	20	25	32	40 to 65
30	Standard product	$\times 10^{-4}$rad	5.8	4.4	4.4	4.4	4.4	—
		arc-min	(2)	(1.5)	(1.5)	(1.5)	(1.5)	—
	Special product	$\times 10^{-4}$rad	—	—	2.9	2.9	2.9	—
		arc-min	—	—	(1)	(1)	(1)	—
50 or more	Standard product	$\times 10^{-4}$rad	4.4	4.4	2.9	2.9	2.9	2.9
		arc-min	(1.5)	(1.5)	(1)	(1)	(1)	(1)
	Special product	$\times 10^{-4}$rad	2.9	2.9	1.5	1.5	1.5	1.5
		arc-min	(1)	(1)	(0.5)	(0.5)	(0.5)	(0.5)

Hysteresis loss

See "Engineering data" for a description of terms.

Table 130-2

Reduction ratio \ Model		14	17	20	25	32	40 or more
30	$\times 10^{-4}$rad	8.7	8.7	8.7	8.7	8.7	—
	arc-min	3.0	3.0	3.0	3.0	3.0	—
50	$\times 10^{-4}$rad	5.8	5.8	5.8	5.8	5.8	5.8
	arc-min	2.0	2.0	2.0	2.0	2.0	2.0
80 or more	$\times 10^{-4}$rad	2.9	2.9	2.9	2.9	2.9	2.9
	arc-min	1.0	1.0	1.0	1.0	1.0	1.0

Max. backlash quantity

See "Engineering data" for a description of terms.

Table 130-3

Reduction ratio \ Model		14	17	20	25	32	40	45	50	58	65
30	$\times 10^{-5}$rad	29.1	16.0	13.6	13.6	11.2	—	—	—	—	—
	arc-sec	60	33	28	28	23	—	—	—	—	—
50	$\times 10^{-5}$rad	17.5	9.7	8.2	8.2	6.8	6.8	5.8	5.8	4.8	4.8
	arc-sec	36	20	17	17	14	14	12	12	10	10
80	$\times 10^{-5}$rad	11.2	6.3	5.3	5.3	4.4	4.4	3.9	3.9	2.9	2.9
	arc-sec	23	13	11	11	9	9	8	8	6	6
100	$\times 10^{-5}$rad	8.7	4.8	4.4	4.4	3.4	3.4	2.9	2.9	2.4	2.4
	arc-sec	18	10	9	9	7	7	6	6	5	5
120	$\times 10^{-5}$rad	—	3.9	3.9	3.9	2.9	2.9	2.4	2.4	1.9	1.9
	arc-sec	—	8	8	8	6	6	5	5	4	4
160	$\times 10^{-5}$rad	—	—	2.9	2.9	2.4	2.4	1.9	1.9	1.5	1.5
	arc-sec	—	—	6	6	5	5	4	4	3	3

Rigidity (Spring constant)

See "Engineering data" for a description of terms.

Table 130-4

Symbol \ Model			14	17	20	25	32	40	45	50	58	65
T_1		N·m	2.0	3.9	7.0	14	29	54	76	108	168	235
		kgf·m	0.20	0.40	0.70	1.4	3.0	5.5	7.8	11	17	24
T_2		N·m	6.9	12	25	48	108	196	275	382	598	843
		kgf·m	0.7	1.2	2.5	4.9	11	20	28	39	61	86
Reduction ratio 30	K_1	$\times 10^4$N·m/rad	0.19	0.34	0.57	1.0	2.4	—	—	—	—	—
		kgf·m/arc-min	0.056	0.10	0.17	0.30	0.70	—	—	—	—	—
	K_2	$\times 10^4$N·m/rad	0.24	0.44	0.71	1.3	3.0	—	—	—	—	—
		kgf·m/arc-min	0.07	0.13	0.21	0.40	0.89	—	—	—	—	—
	K_3	$\times 10^4$N·m/rad	0.34	0.67	1.1	2.1	4.9	—	—	—	—	—
		kgf·m/arc-min	0.10	0.20	0.32	0.62	1.5	—	—	—	—	—
	θ_1	$\times 10^{-4}$rad	10.5	11.5	12.3	14	12.1	—	—	—	—	—
		arc-min	3.6	4.0	4.1	4.7	4.3	—	—	—	—	—
	θ_2	$\times 10^{-4}$rad	31	30	38	40	38	—	—	—	—	—
		arc-min	10.7	10.2	12.7	13.4	13.3	—	—	—	—	—
Reduction ratio 50	K_1	$\times 10^4$N·m/rad	0.34	0.81	1.3	2.5	5.4	10	15	20	31	44
		kgf·m/arc-min	0.1	0.24	0.38	0.74	1.6	3.0	4.3	5.9	9.3	13
	K_2	$\times 10^4$N·m/rad	0.47	1.1	1.8	3.4	7.8	14	20	28	44	61
		kgf·m/arc-min	0.14	0.32	0.52	1.0	2.3	4.2	6.0	8.2	13	18
	K_3	$\times 10^4$N·m/rad	0.57	1.3	2.3	4.4	9.8	18	26	34	54	78
		kgf·m/arc-min	0.17	0.4	0.67	1.3	2.9	5.3	7.6	10	16	23
	θ_1	$\times 10^{-4}$rad	5.8	4.9	5.2	5.5	5.5	5.2	5.2	5.5	5.2	5.2
		arc-min	2.0	1.7	1.8	1.9	1.9	1.8	1.8	1.9	1.8	1.8
	θ_2	$\times 10^{-4}$rad	16	12	15.4	15.7	15.7	15.4	15.1	15.4	15.1	15.1
		arc-min	5.6	4.2	5.3	5.4	5.4	5.3	5.2	5.3	5.2	5.2

* The values in this table are reference values. The lower-limit value is approximately 80% of the displayed value.

Table 131-1

Symbol \ Model			14	17	20	25	32	40	45	50	58	65
T_1		N·m	2.0	3.9	7.0	14	29	54	76	108	168	235
		kgf·m	0.20	0.40	0.70	1.4	3.0	5.5	7.8	11	17	24
T_2		N·m	6.9	12	25	48	108	196	275	382	598	843
		kgf·m	0.7	1.2	2.5	4.9	11	20	28	39	61	86
Reduction ratio 80 or more	K_1	$\times 10^4$N·m/rad	0.47	1	1.6	3.1	6.7	13	18	25	40	54
		kgf·m/arc-min	0.14	0.3	0.47	0.92	2.0	3.8	5.4	7.4	12	16
	K_2	$\times 10^4$N·m/rad	0.61	1.4	2.5	5.0	11	20	29	40	61	88
		kgf·m/arc-min	0.18	0.4	0.75	1.5	3.2	6.0	8.5	12	18	26
	K_3	$\times 10^4$N·m/rad	0.71	1.6	2.9	5.7	12	23	33	44	71	98
		kgf·m/arc-min	0.21	0.46	0.85	1.7	3.7	6.8	9.7	13	21	29
	θ_1	$\times 10^{-4}$rad	4.1	3.9	4.4	4.4	4.4	4.1	4.1	4.4	4.1	4.4
		arc-min	1.4	1.3	1.5	1.5	1.5	1.4	1.4	1.5	1.4	1.5
	θ_2	$\times 10^{-4}$rad	12	9.7	11.3	11.1	11.6	11.1	11.1	11.1	11.1	11.3
		arc-min	4.2	3.3	3.9	3.8	4.0	3.8	3.8	3.8	3.8	3.9

* The values in this table are reference values. The lower-limit value is approximately 80% of the displayed value.

Starting torque

See "Engineering data" for a description of terms. As the values in the table below vary depending on the use conditions, use them as reference values.

CSG Series

Table 131-2
Unit: cN·m

Reduction ratio \ Model	14	17	20	25	32	40	45	50	58	65
50	4.5	6.7	8.6	17	34	61	85	—	—	—
80	3.1	4.4	5.4	10	21	39	54	73	108	154
100	2.8	3.7	4.7	8.8	20	34	47	64	97	132
120	—	3.4	4.2	8.0	17	31	43	57	88	121
160	—	—	3.6	6.9	15	26	36	50	75	102

CSF Series

Table 131-3
Unit: cN·m

Reduction ratio \ Model	14	17	20	25	32	40	45	50	58	65
30	6.4	9.3	15	25	54	—	—	—	—	—
50	4.1	6.1	7.8	15	31	55	77	110	160	220
80	2.8	4	4.9	9.2	19	35	49	66	98	140
100	2.5	3.4	4.3	8	18	31	43	58	88	120
120	—	3.1	3.8	7.3	15	28	39	52	80	110
160	—	—	3.3	6.3	14	24	33	45	68	93

Overdrive starting torque

See "Engineering data" for a description of terms. As the values in the table below vary depending on the use conditions, use them as reference values.

CSG Series

Table 131-4
Unit: N·m

Reduction ratio \ Model	14	17	20	25	32	40	45	50	58	65
50	1.8	3.3	5.2	9.9	20	36	52	—	—	—
80	1.8	3.3	5.3	10	21	36	53	69	106	154
100	2	3.6	5.6	11	22	40	56	75	121	165
120	—	3.9	6.1	12	24	43	61	80	121	176
160	—	—	7	14	29	51	70	94	143	198

CSF Series

Table 131-5
Unit: N·m

Reduction ratio \ Model	14	17	20	25	32	40	45	50	58	65
30	2.4	3.8	6.2	11	23	—	—	—	—	—
50	1.6	3	4.7	9	18	33	47	62	95	130
80	1.6	3	4.8	9.1	19	33	48	63	96	140
100	1.8	3.3	5.1	9.8	20	36	51	68	110	150
120	—	3.5	5.5	11	22	39	55	73	110	160
160	—	—	6.4	13	26	46	64	85	130	180

Ratcheting torque

See "Engineering data" for a description of terms.

CSG Series

Table 132-1
Unit: N·m

Reduction ratio \ Model	14	17	20	25	32	40	45	50	58	65
50	110	190	280	580	1200	2300	3500	—	—	—
80	140	260	450	880	1800	3600	5000	7000	10000	14000
100	100	200	330	650	1300	2700	4000	5300	8300	12000
120	—	150	310	610	1200	2400	3600	4900	7500	10000
160	—	—	280	580	1200	2300	3300	4600	7200	10000

CSF Series

Table 132-2
Unit: N·m

Reduction ratio \ Model	14	17	20	25	32	40	45	50	58	65
30	59	100	170	340	720	—	—	—	—	—
50	88	150	220	450	980	1800	2700	3700	5800	7800
80	110	200	350	680	1400	2800	3900	5400	8200	11000
100	84	160	260	500	1000	2100	3100	4100	6400	9400
120	—	120	240	470	980	1900	2800	3800	5800	8300
160	—	—	220	450	980	1800	2600	3600	5600	8000

Buckling torque

See "Engineering data" for a description of terms.

CSG Series

Table 132-3
Unit: N·m

Model	14	17	20	25	32	40	45	50	58	65
All Ratios	260	500	800	1700	3500	6700	8900	12200	19000	26600

CSF Series

Table 132-4
Unit: N·m

Model	14	17	20	25	32	40	45	50	58	65
All Ratios	190	330	560	1000	2200	4300	5800	8000	12000	17000

On no-load running torque

No-load running torque means the torque on the input side (high-speed shaft side) required to put HarmonicDrive® under a no-load condition.

Measuring condition

Table 132-5

Reduction ratio 100			
Lubrication condition	Grease lubrication	Name	Harmonic grease® SK-1A
			Harmonic grease® SK-2
		Application qty.	Appropriate application quantity.
The torque value is the value after a trial run for two hours or longer at an input of 2000 r/min.			

* Contact us for oil lubrication.

Correction quantity by reduction

The no-load running torque of HarmonicDrive® varies depending on the reduction ratio. Graphs 133-1 to 133-4 show the values for a reduction ratio of 100. Obtain other reduction ratios by adding the correction quantity shown in the right-hand table (Table 132-6).

Correction quantity for the no-load running torque of the unit type

Table 132-6
Unit: cN·m

Model \ Reduction ratio	30	50	80	120	160
14	2.5	1.1	0.2	—	—
17	3.8	1.6	0.3	-0.2	—
20	5.4	2.3	0.5	-0.3	-0.8
25	8.8	3.8	0.7	-0.5	-1.2
32	16	7.1	1.3	-0.9	-2.2
40	—	12	2.1	-1.5	-3.5
45	—	16	2.9	-2.1	-4.9
50	—	21	3.7	-2.6	-6.2
58	—	30	5.3	-3.8	-8.9
65	—	41	7.2	-5.1	-12

■No-load running torque for a reduction ratio of 100

Input rotational speed: 500r/min

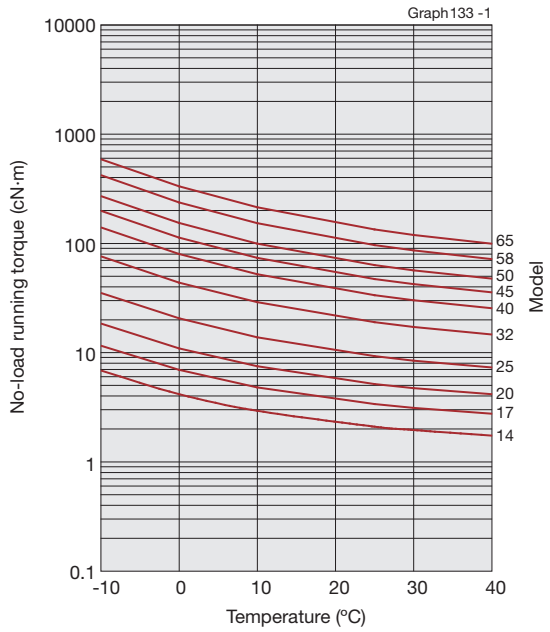

Input rotational speed: 1000r/min

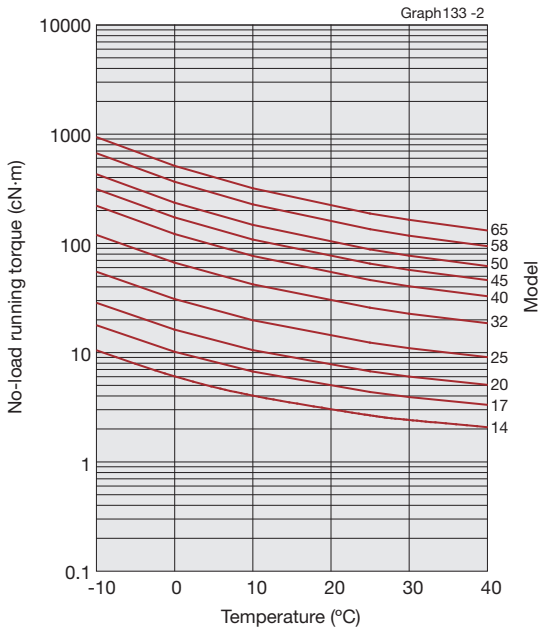

Input rotational speed: 2000r/min

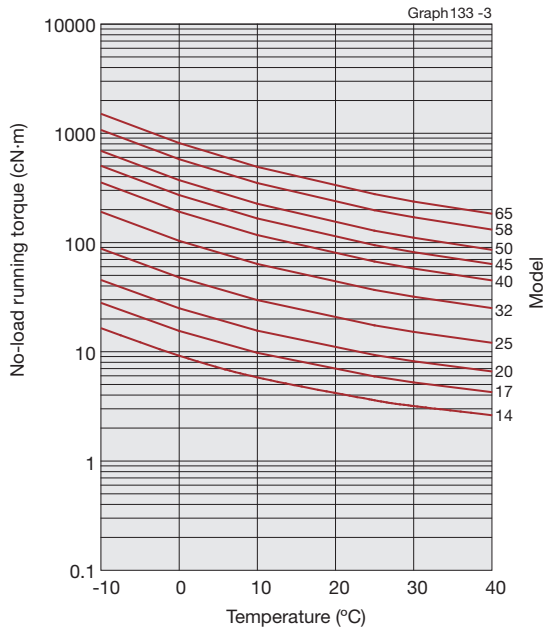

Input rotational speed: 3500r/min

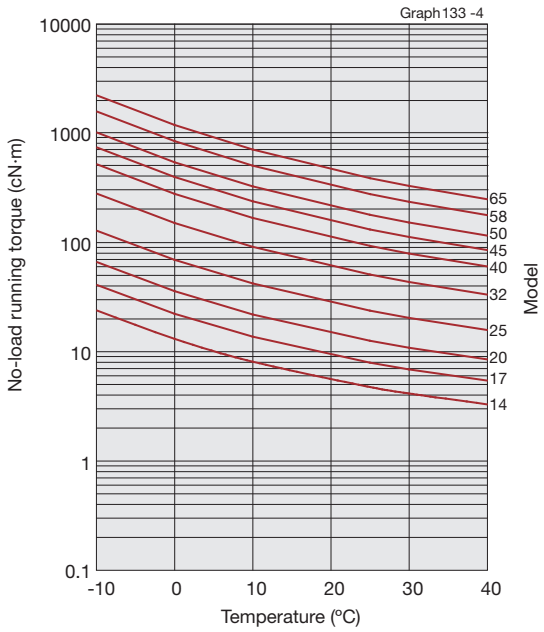

*The values in this graph are average values ($\overline{X}$). $\sigma \fallingdotseq \overline{X} \times 0.2$

Efficiency characteristics

The efficiency varies depending on the following conditions.

- Reduction ratio
- Input rotational speed
- Load torque
- Temperature
- Lubrication condition (Type of lubricant and the quantity)

Measuring condition

Table 134-1

Built-in	Measurement by building the recommended built-in precision into the product		
Load torque	The rated torque shown in the ratings (see the page 126 and 127)		
Lubricating condition	Grease lubrication	Name	Harmonic grease® SK-1A
			Harmonic grease® SK-2
		Application qty.	Appropriate application quantity

Efficiency correction coefficient

If the load torque is smaller than the rated torque, the efficiency value lowers. Obtain correction coefficient Ke from the efficiency correction coefficient graph of Graph 134-1 to obtain the efficiency using the following example of calculation.

Example of calculation

Efficiency η (%) under the following condition is obtained from the example of CSF-20-80-2A-GR.
Input rotational speed: 1000 r/min
Load torque: 19.6 N·m
Lubrication method: Grease lubrication (Harmonic grease® SK-1A)
Lubricant temperature: 20°C
Since the rated torque of model number 20 with a reduction ratio of 80 is 34 N·m (Ratings: Page 127), the torque ratio α is 0.58. (α=19.6/34=0.58)

- The efficiency correction coefficient is Ke=0.93 from Graph 134-1.
- Efficiency η at load torque 19.6 N·m: η=Ke·η_R=0.93 x 78=73%

Efficiency correction coefficient

Graph 134-1

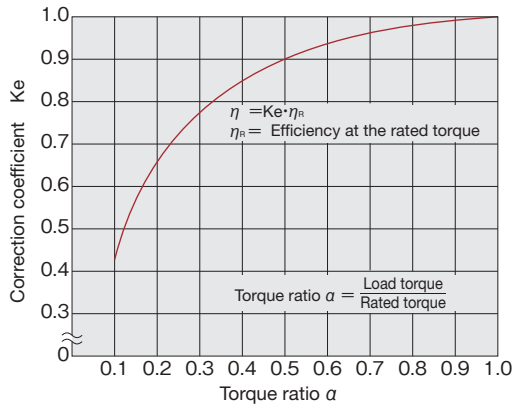

* Efficiency correction coefficient Ke=1 holds when the load torque is greater than the rated torque.

■Efficiency at rated torque (Model No. 14)

Reduction ratio 30

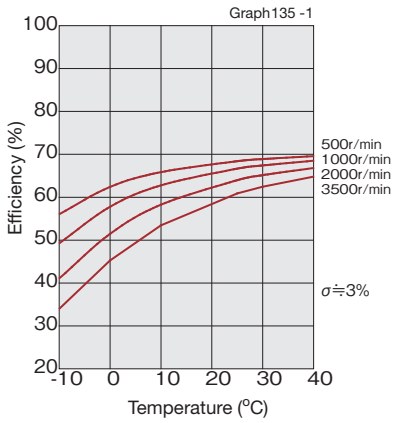

Reduction ratio 50, 80

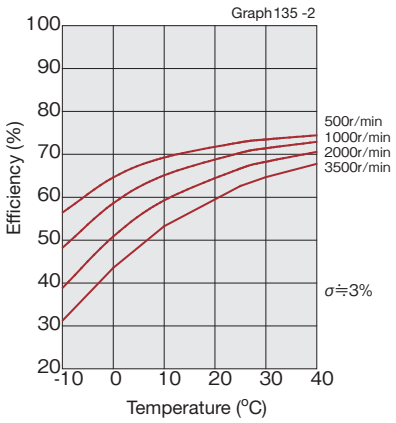

Reduction ratio 100

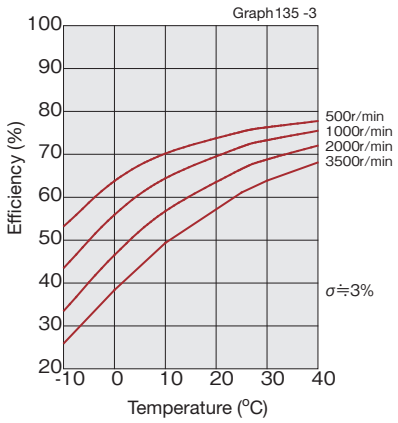

■Efficiency at rated torque (Model No. 17 to 65)

Reduction ratio 30

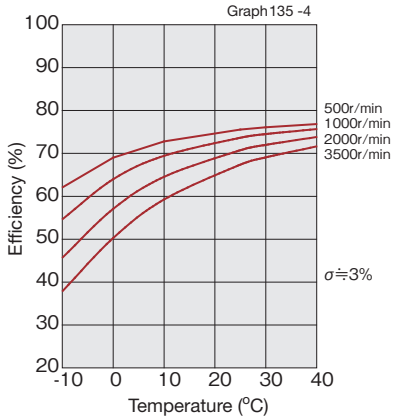

Reduction ratio 50

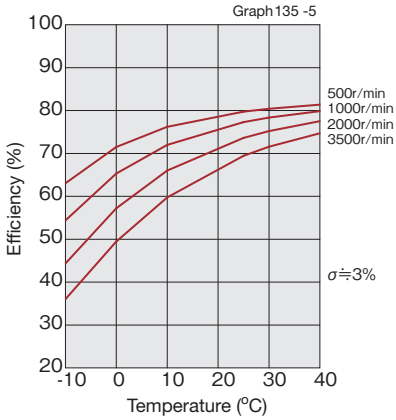

Reduction ratio 80, 100

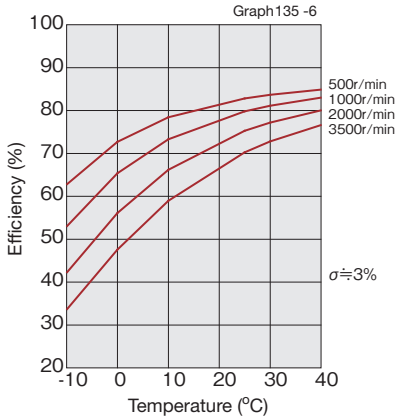

Reduction ratio 120

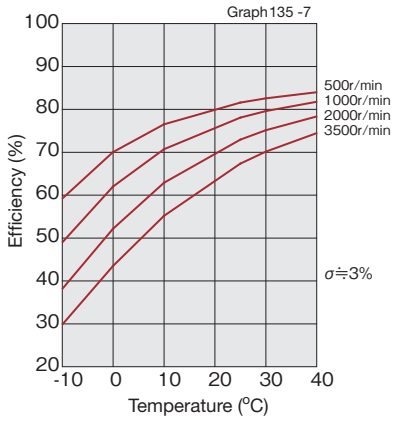

Reduction ratio 160

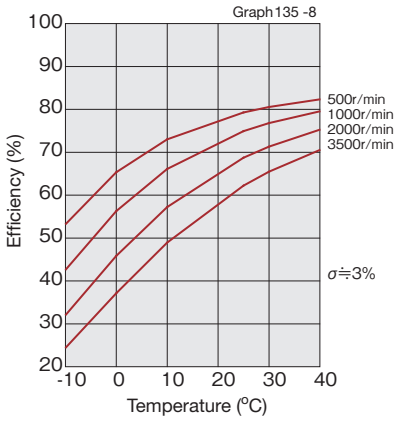

Specification of the main roller bearing

A precision cross roller bearing is built in the unit type to directly support the external load (output flange).
Check the maximum load moment load, life of the bearing and static safety coefficient to fully bring out the performance of the unit type.
See the Pages 030 to 034 of “Engineering data” for each calculation formula.

■Checking procedure

(1) Checking the maximum load moment load (M*max*)

Obtain the maximum load moment load (M*max*). → Maximum load moment load (M*max*) ≦ permissible moment (Mc)

(2) Checking the life

Obtain the average radial load (Fr*av*) and the average axial load (Fa*av*). → Obtain the radial load coefficient (x) and the axial load coefficient (y). → Calculate the life and check it.

(3) Checking the static safety coefficient

Obtain the static equivalent radial load coefficient (Po). → Check the static safety coefficient. (fs)

■Main roller bearing specifications

The specifications of the cross roller are shown in Table 136-1 and -2.

Specifications CSG Series/CSF Series

Table 136-1

Model	Pitch circle dia. of a roller	Offset amount	Basic rated load				Permissible moment load Mc		Moment rigidity Km	
	dp	R	Basic dynamic rated load C		Basic static rated load Co					
	m	m	$\times10^2$N	kgf	$\times10^2$N	kgf	N·m	kgf·m	$\times10^4$ N·m/rad	kgf·m/arc-min
14	0.035	0.0095	47	480	60.7	620	41	4.2	4.38	1.3
17	0.0425	0.0095	52.9	540	75.5	770	64	6.5	7.75	2.3
20	0.050	0.0095	57.8	590	90.0	920	91	9.3	12.8	3.8
25	0.062	0.0115	96.0	980	151	1540	156	16	24.2	7.2
32	0.080	0.013	150	1530	250	2550	313	32	53.9	16
40	0.096	0.0145	213	2170	365	3720	450	46	91.0	27
45	0.111	0.0155	230	2350	426	4340	686	70	141	42
50	0.119	0.018	348	3550	602	6140	759	77	171	51
58	0.141	0.0205	518	5290	904	9230	1180	120	283	84
65	0.160	0.0225	556	5670	1030	10500	1860	190	404	120

Specifications CSG-LW Series/CSF-LW Series

Table 136-2

Model	Pitch circle dia. of a roller	Offset amount	Basic rated load				Permissible moment load Mc		Moment rigidity Km	
	dp	R	Basic dynamic rated load C		Basic static rated load Co					
	m	m	$\times10^2$N	kgf	$\times10^2$N	kgf	N·m	kgf·m	$\times10^4$ N·m/rad	kgf·m/arc-min
14	0.035	0.0093	47	480	60.7	620	33.6	3.4	3.6	1.1
17	0.043	0.0091	52.9	540	75.5	770	52.5	5.3	6.4	1.9
20	0.050	0.0098	57.8	590	90	920	74.6	7.6	10.5	3.1
25	0.064	0.0118	96	980	151	1540	127.9	13.1	19.8	5.9
32	0.083	0.0133	150	1530	250	2550	256.7	26.2	44.2	13.1
40	0.096	0.0148	213	2170	365	3720	369	37.7	74.6	22.1
45	0.111	0.0158	230	2350	426	4340	562.5	57.4	115.6	34.4
50	0.119	0.0180	348	3550	602	6140	622	63.5	140	48.5
58	0.141	0.0205	518	5290	904	9230	838	85.4	201	59.6
65	0.160	0.0185	556	5670	1030	10500	1525	156	331	108

* The basic dynamic rated load means a certain static radial load so that the basic dynamic rated life of the roller bearing is a million rotations.
* The basic static rated load means a static load that gives a certain level of contact stress (4 kN/mm^2) in the center of the contact area between the rolling element receiving the maximum load and the orbit.
* Permissible moment load means the maximum moment load that may be applied to the output shaft. Within this range, the basic performance is secured and the operation can be performed.
* The value of the moment rigidity is the reference value. The lower-limit value is approximately 80% of the displayed value.
* Permissible axial load or permissible radial load is the value that satisfies the reducer life when either a genuine radial load or an axial load is applied to the main shaft. (When radial load is Lr+R=0mm, and axial load is La=0mm)

Design guide

Mechanical precision

Mechanical precision

Fig. 137-1

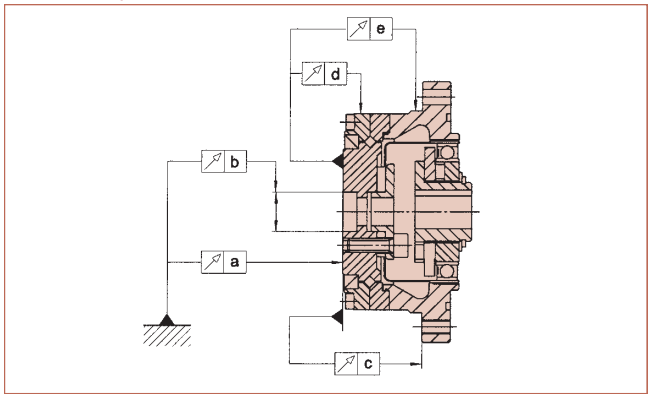

Table 137-1
Unit: mm

Symbol \ Model	14	17	20	25	32	40	45	50	58	65
a	0.010	0.010	0.010	0.015	0.015	0.015	0.018	0.018	0.018	0.018
b	0.010	0.012	0.012	0.013	0.013	0.015	0.015	0.015	0.017	0.017
c	0.024	0.026	0.038	0.045	0.056	0.060	0.068	0.069	0.076	0.085
d	0.010	0.010	0.010	0.010	0.010	0.015	0.015	0.015	0.015	0.015
e	0.038	0.038	0.047	0.049	0.054	0.060	0.065	0.067	0.070	0.075

Installation precision

Maintain the recommended precision shown in Figure 137-1 and Table 137-1 to fully bring out the excellent performance of unit type for built-in design.

Recommended precision for the built-in case

Fig. 137-2

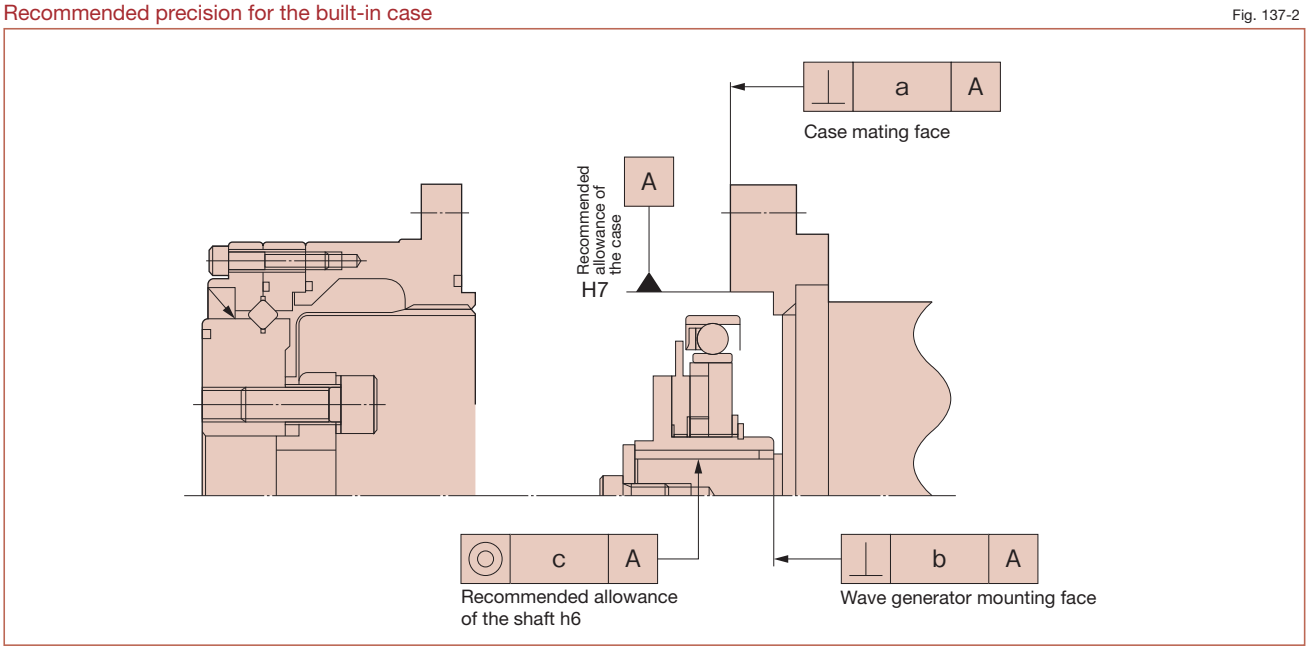

Recommended precision for the built-in case

Table 137-2
Unit: mm

Symbol \ Model	14	17	20	25	32	40	45	50	58	65
a	0.011	0.015	0.017	0.024	0.026	0.026	0.027	0.028	0.031	0.034
b	0.017	0.020	0.020	0.024	0.024	0.032	0.032	0.032	0.032	0.032
	(0.008)	(0.010)	(0.010)	(0.012)	(0.012)	(0.012)	(0.013)	(0.015)	(0.015)	(0.015)
C	0.030	0.034	0.044	0.047	0.050	0.063	0.065	0.066	0.068	0.070
	(0.016)	(0.018)	(0.019)	(0.022)	(0.022)	(0.024)	(0.027)	(0.030)	(0.033)	(0.035)

* The value in the parentheses indicates that input (wave generator) is the rigid type.

Installation and transmission torque

Fig.138 -1

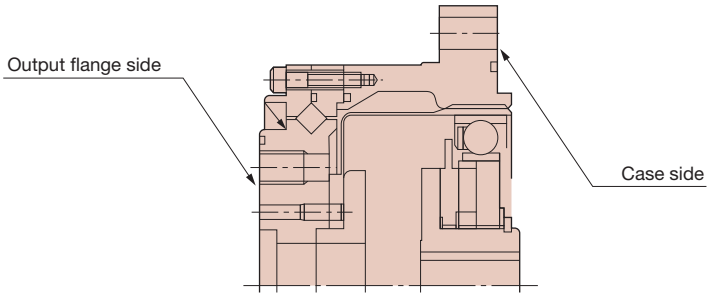

CSG series: Installation of output flange side and transmission torque

Table138 -1

Item \ Model		14	17	20	25	32	40	45	50	58	65
Number of bolts		6	6	8	8	8	8	8	8	8	8
Bolt size		M4	M5	M6	M8	M10	M10	M12	M14	M16	M16
Installation of bolts: P.C.D.	mm	23	27	32	42	55	68	82	84	100	110
Bolt tightening torque	N·m	5.4	10.8	18.4	45	89	89	154	246	383	383
	kgf·m	0.55	1.1	1.88	4.5	9.1	9.1	15.7	25.1	39.1	39.1
Bolt transmission torque	N·m	58	109	245	580	1220	1510	2624	3690	5981	6579
	kgf·m	5.9	11.2	25	59	124	154	268	377	610	671

CSG series: Installation of case side and transmission torque

Table138 -2

Item \ Model		14	17	20	25	32	40	45	50	58	65
Number of bolts		8	8	8	10	12	10	12	14	12	8
Bolt size		M4	M4	M5	M5	M6	M8	M8	M8	M10	M12
Installation of bolts: P.C.D.	mm	65	71	82	96	125	144	164	174	206	236
Bolt tightening torque	N·m	4.5	4.5	9.0	9.0	15.3	37	37	37	74	128
	kgf·m	0.46	0.46	0.92	0.92	1.56	3.8	3.8	3.8	7.5	13.1
Bolt transmission torque	N·m	182	196	365	538	1200	2100	2844	3251	5717	6293
	kgf·m	19	20	37	55	122	214	290	360	583	642

(Table 138-1, 138-2/Notes)
1. It is assumed that the material of the female screws can endure the bolt tightening torque.
2. Recommended bolt Bolt name: JIS B 1176 hexagonal bolt Intensity type: JIS B 1051 12.9 or more
3. Torque efficiency: K=0.2
4. Tightening efficiency: A=1.4
5. Tightening friction coefficient μ=0.15

CSG-LW series (Light Weight Type): Installation of output flange side and transmission torque

Table138 -3

Item \ Model		14	17	20	25	32	40	45	50	58	65
Number of bolts		6	6	8	8	8	8	8	8	8	8
Bolt size		M4	M5	M6	M8	M10	M10	M12	M14	M16	M16
Installation of bolts: P.C.D.	mm	23	27	32	42	55	68	82	84	100	110
Bolt tightening torque	N·m	5.4	10.8	18.4	45	89	89	154	246	383	383
	kgf·m	0.55	1.1	1.88	4.5	9.1	9.1	15.7	25.1	39.1	39.1
Bolt transmission torque	N·m	58	109	245	580	1220	1510	2624	3690	5981	6579
	kgf·m	5.9	11.2	25	59	124	154	268	377	610	671

CSG-LW series (Light Weight Type): Installation of case side and transmission torque

Table138 -4

Item \ Model		14	17	20	25	32	40	45	50	58	65
Number of bolts		6	8	8	10	12	10	16	18	16	12
Bolt size		M4	M4	M5	M5	M6	M8	M8	M8	M10	M12
Installation of bolts: P.C.D.	mm	65	71	82	96	125	144	164	174	206	236
Bolt tightening torque	N·m	3.2	3.2	6.4	6.4	10.8	26.5	26.5	26.5	51.9	90
	kgf·m	0.33	0.33	0.65	1.1	2.7	2.7	2.7	2.7	5.3	9.2
Bolt transmission torque	N·m	98	143	261	382	842	1488	2712	3237	5350	6649
	kgf·m	10	14.6	26.6	39	85.9	152	277	330	546	678

(Table 138-3, 138-4/Notes)
1. It is assumed that the material of the female screws can endure the bolt tightening torque.
2. Recommended bolt Bolt name: JIS B 1176 hexagonal bolt Intensity type: JIS B 1051 12.9 or more
3. Torque efficiency: K=0.2
4. Tightening efficiency: A=1.4
5. Tightening friction coefficient μ=0.15
6. Since the material of the flange on the case side of CSG-LW is AL (aluminum), be sure to set the bolt tightening torque to the value in Table 138-4.
   If the tightening toque exceeds the value listed in Table 138-4, the correct transmission torque may not be obtained and looseness may be caused.
   Use a washer so that the bolt seating surface does not directly touch the aluminum.

CSF series: Installation of output flange side and transmission torque

Table 139-1

Item \ Model		14	17	20	25	32	40	45	50	58	65
Number of bolts		6	6	8	8	8	8	8	8	8	8
Bolt size		M4	M5	M6	M8	M10	M10	M12	M14	M16	M16
Installation of bolts: P.C.D.	mm	23	27	32	42	55	68	82	84	100	110
Bolt tightening torque	N·m	4.5	9	15.3	37	74	74	128	205	319	319
	kgf·m	0.46	0.92	1.56	3.8	7.6	7.6	13.1	20.9	32.5	32.5
Bolt transmission torque	N·m	49	91	204	486	1108	1258	2200	3070	4980	5480
	kgf·m	5.0	9.3	21	50	104	128	224	313	508	559

CSF series: Installation of case side and transmission torque

Table 139-2

Item \ Model		14	17	20	25	32	40	45	50	58	65
Number of bolts		6	6	6	8	12	8	12	12	12	8
Bolt size		M4	M4	M5	M5	M6	M8	M8	M8	M10	M12
Installation of bolts: P.C.D.	mm	65	71	82	96	125	144	164	174	206	236
Bolt tightening torque	N·m	4.5	4.5	9.0	9.0	15.3	37	37	37	74	128
	kgf·m	0.46	0.46	0.92	0.92	1.56	3.8	3.8	3.8	7.5	13.1
Bolt transmission torque	N·m	137	147	274	431	1200	1680	2844	3040	5717	6293
	kgf·m	14	15	28	44	122	171	290	310	583	642

(Table 139-1, 139-2/Notes)

1. It is assumed that the material of the female screws can endure the bolt tightening torque.
2. Recommended bolt Bolt name: JIS B 1176 hexagonal bolt Intensity type: JIS B 1051 12.9 or more
3. Torque efficiency: K=0.2
4. Tightening efficiency: A=1.4
5. Tightening friction coefficient μ=0.15

CSF-LW series: Installation of output flange side and transmission torque

Table 139-3

Item \ Model		14	17	20	25	32	40	45	50	58	65
Number of bolts		6	6	8	8	8	8	8	8	8	8
Bolt size		M4	M5	M6	M8	M10	M10	M12	M14	M16	M16
Installation of bolts: P.C.D.	mm	23	27	32	42	55	68	82	84	100	110
Bolt tightening torque	N·m	4.5	9.0	15.3	37	74	74	128	205	319	319
	kgf·m	0.46	0.92	1.56	3.8	7.6	7.6	13.1	20.9	32.5	32.5
Bolt transmission torque	N·m	49	91	204	486	1019	1258	2200	3070	4980	5480
	kgf·m	5.0	9.3	21	50	104	128	224	313	508	559

CSF-LW series: Installation of case side and transmission torque

Table 139-4

Item \ Model		14	17	20	25	32	40	45	50	58	65
Number of bolts		6	8	8	10	12	10	16	18	16	12
Bolt size		M4	M4	M5	M5	M6	M8	M8	M8	M10	M12
Installation of bolts: P.C.D.	mm	65	71	82	96	125	144	164	174	206	236
Bolt tightening torque	N·m	3.2	3.2	6.4	6.4	10.8	26.5	26.5	26.5	51.9	90
	kgf·m	0.33	0.33	0.65	0.65	1.1	2.7	2.7	2.7	5.3	9.2
Bolt transmission torque	N·m	9.8	143	261	382	842	1488	2712	3237	5350	6649
	kgf·m	10	14.6	26.6	39	85.9	152	277	330	546	678

(Table 139-1, 139-2/Notes)

1. It is assumed that the material of the female screws can endure the bolt tightening torque.
2. Recommended bolt Bolt name: JIS B 1176 hexagonal bolt Intensity type: JIS B 1051 12.9 or more
3. Torque efficiency: K=0.2
4. Tightening efficiency: A=1.4
5. Tightening friction coefficient μ=0.15
6. Since the material of the flange on the case side of CSF-LW is AL (aluminum), be sure to set the bolt tightening torque to the value in Table 139-4.
   If the tightening toque exceeds the value listed in Table 139-4, the correct transmission torque may not be obtained and looseness may be caused.

■Precautions on installing the load to the output flange (models 14 to 25)

As the distance (see the size symbol “L” in Figure 128-1 on Page 128) between the oil seal on the output flange periphery and the edge of the output flange (rotor) is short for the unit types of model numbers 14, 17, 20 and 25, the load may interfere with the oil seal. Produce a design so that the load cannot be applied to the oil seal.

Installation of a motor

■Motor mounting flange

A motor mounting flange is required for installing a motor on the unit type. The recommended size and precision of the basic part of the motor mounting flange is shown in Table 140-1.

Fig. 140-1

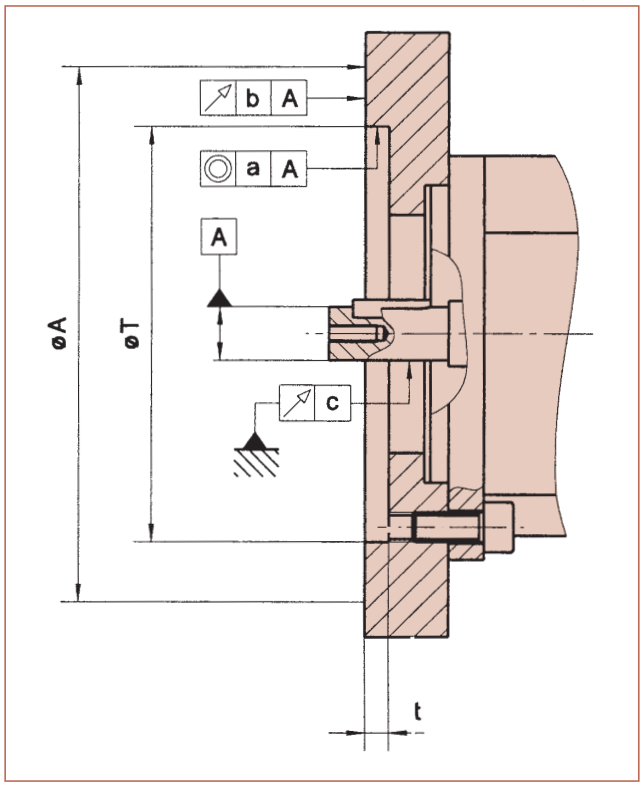

Table 140-1
Unit: mm

Symbol \ Model	14	17	20	25	32	40	45	50	58	65
a	0.03	0.04	0.04	0.04	0.04	0.05	0.05	0.05	0.05	0.05
b	0.03	0.04	0.04	0.04	0.04	0.05	0.05	0.05	0.05	0.05
c	0.015	0.015	0.018	0.018	0.018	0.018	0.021	0.021	0.021	0.021
ϕA	73	79	93	107	138	160	180	190	226	260
t	3	3	4.5	4.5	4.5	6	6	6	7.5	7.5
ϕT	38H7	48H7	56H7	67H7	90H7	110H7	124H7	135H7	156H7	177H7

Installation of three parts of basic elements

■Installation of the wave generator

Maximum hole diameter size

The standard hole diameter of the wave generator is as shown in the dimensional outline drawing and may be changed in the range up to the maximum dimension shown in the table. The JIS standard is recommended for the key groove size. The valid length of the key shall be the value fully durable for the transmission torque.

* The shape can be changed to special forms for taper holes and so on.

Oldham's coupling mechanism may be eliminated to make a hole diameter larger than the maximum size. The maximum hole diameter can be up to the value shown in the table below taking deformation of the wave generator plug by load torque into consideration.
(This is the value including the dimension of the key groove depth.)

Hole diameter of the wave generator

Fig. 140-2

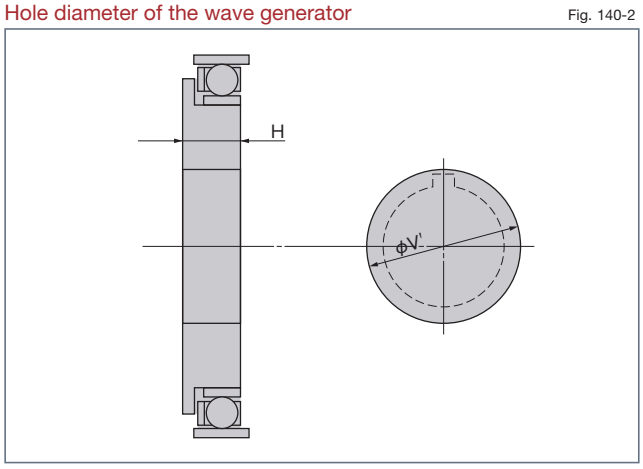

Hole diameter of the wave generator hub

Table 140-2
Unit: mm

Size \ Model	14	17	20	25	32	40	45	50	58	65
Stand. dimension (H7)	6	8	12	14	14	14	19	19	22	24
Prepared hole size	3	4	5	6	6	10	10	10	13	16
Maximum size	8	10	13	15	15	20	20	20	25	30

Plug maximum diameter and minimum thickness of installing the wave generator plug directly on the input shaft

Table 140-3
Unit: mm

Size \ Model	14	17	20	25	32	40	45	50	58	65
Max. hole ϕV'	17	20	23	28	36	42	47	52	60	67
Min. plug thickness H $^{0}_{-0.1}$	7.2	7.6	11.3	11.3	13.7	15.9	17.8	19	21.4	23.5

■Installation procedure

As shown in Figures 141-1 and 141-2, there are two basic procedures to install a motor. Select the installation procedure by the diameter of the spigot joint on the motor mounting surface. Table 141-1 shows the selection standard by the diameter of the spigot joint on the motor mounting surface.

Table 141-1
Unit: mm

Model	14	17	20	25	32	40	45	50	58	65	Reference drawing for installation
The dia. of the spigot joint on the motor mounting surface	<35.5	<43.5	<50.0	<62.5	<81.5	<100.0	<113.5	<124.5	<147	<167	Installation procedure-1 (Fig. 141-1)
	≧35.5	≧43.5	≧50.0	≧62.5	≧81.5	≧100.0	≧113.5	≧124.5	≧147	≧167	Installation procedure-2 (Fig. 141-2)

Fig. 141-1

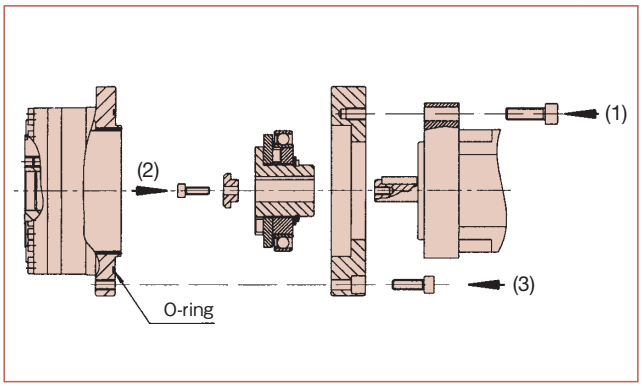

Installation procedure-1

(1) Install the mounting flange on the motor mounting surface.
(2) Install a wave generator on the motor output shaft.
(3) Install the main unit.

Fig. 141-2

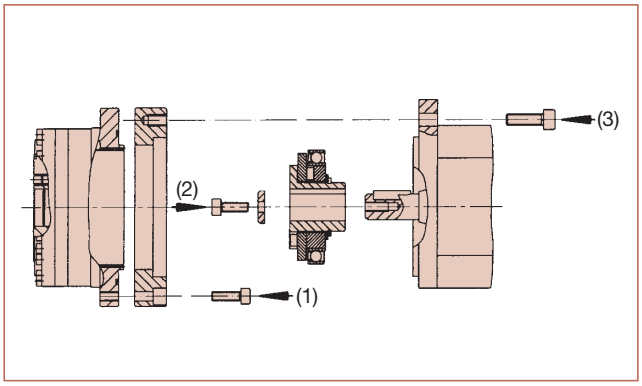

Installation procedure-2

(1) Install the mounting flange on the main unit.
(2) Install a wave generator on the motor output shaft.
(3) Install the mounting flange (main unit) on the motor mounting surface.

■Precautions on installation

The unit type may generate vibration and abnormal sound due to a failure during installation. Assemble the product based on the following precautions.

Precautions regarding the wave generator

1. Avoid assembly such as where excessive force is applied to the wave generator bearing. You can smoothly insert the wave generator by turning it.

2. Pay attention so that the effect of misalignment and turnover will be within the recommended value (see “Built-in precision” of each series on Page 137) for the wave generator without Oldham’s coupling mechanism.

Other precautions

1. Is the flatness of the mounting surface poor or distorted?
2. Is any embossment of the screw hole area, burr or trapped foreign matter found?
3. Have chamfering and relief working of the corner been performed to prevent interference with the area of installation of the unit?

On anti-rust provision

The surface of the component type is not treated with anti-rust coating. Apply anti-rust agent on the surface if required. Contact us if you would like us to perform anti-rust surface treatment.

Lubrication

Grease lubrication is standard for the unit type that is delivered with grease sealed. Lubricant Harmonic grease® SK-2 is for model numbers 14 and 17, and Harmonic grease® SK-1A is for model numbers 20 to 65 (Harmonic grease® 4B No.2 for the cross roller bearing). Harmonic grease® 4B No.2 is also available for the long-life type (see "Engineering data" for the specifications of the grease).

The distance between the main unit and the inner wall of the mounting flange should be as short as possible so that grease does not fly and remains inside the unit during operation. The recommended size is shown in Table 142-1.

Fig. 142-1

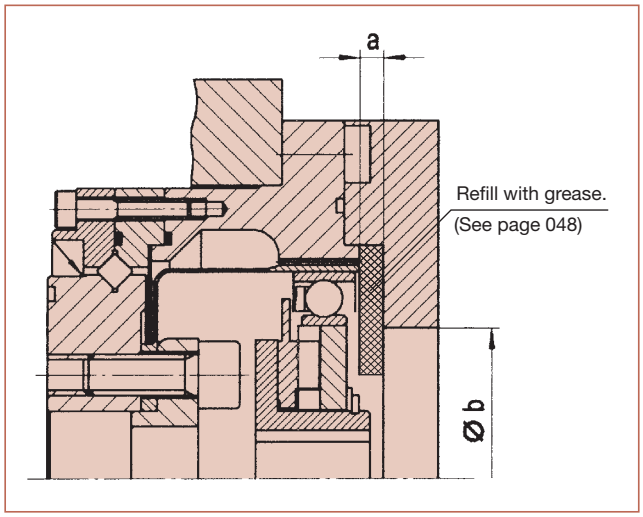

Table 142-1
Unit: mm

Symbol \ Model	14	17	20	25	32	40	45	50	58	65
a*	1	1	1.5	1.5	1.5	2	2	2	2.5	2.5
a**	3	3	4.5	4.5	4.5	6	6	6	7.5	7.5
ϕb	16	26	30	37	37	45	45	45	56	62

* Horizontal and vertical: when the wave generator is below
** Vertical: when the wave generator is above

■Other precautions

Fill the gap between the wave generator and the input cover (motor flange) with grease to use the wave generator facing upward or downward (see Figure 048-3 on Page 048).

Sealing mechanism

The following sealing mechanism is required to prevent grease leakage and maintain the high durability of HarmonicDrive®.

- Rotating and sliding area ····· Oil seal (with a spring). Take care regarding flaws on the shaft.
- Flange mating face and mating ···· O-ring and seal agent. Take care regarding the distortion on the plane and how the O-ring is engaged.
- Screw hole area ····· Use a screw lock agent (Locktite 242 is recommended) or seal tape.

(Note) Observe the description above for the particular use of Harmonic grease® 4B No.2.

Sealing area and the recommended sealing method for the unit type

Table 142-2

Area requiring sealing		Recommended sealing method
Output side	Pass-through hole in the center of the output flange and the output flange mating face	Use O-ring (attached to our product)
	Spanner screw area	Screw lock agent with sealing effect (Locktite 242 is recommended)
Input side	Flange mating face	Use O-ring (attached to our product)
	Motor output shaft	Select one with an oil seal. Those without an oil seal should be structured so that an oil seal is attached to the motor mounting flange.

On anti-rust provision

The surface of the component type is not treated with anti-rust coating. Apply anti-rust agent on the surface if required. Contact us if you would like us to perform anti-rust surface treatment.

Application

Bending and twisting drive of the wrist for a vertical multijoint type robot

Fig. 143-1

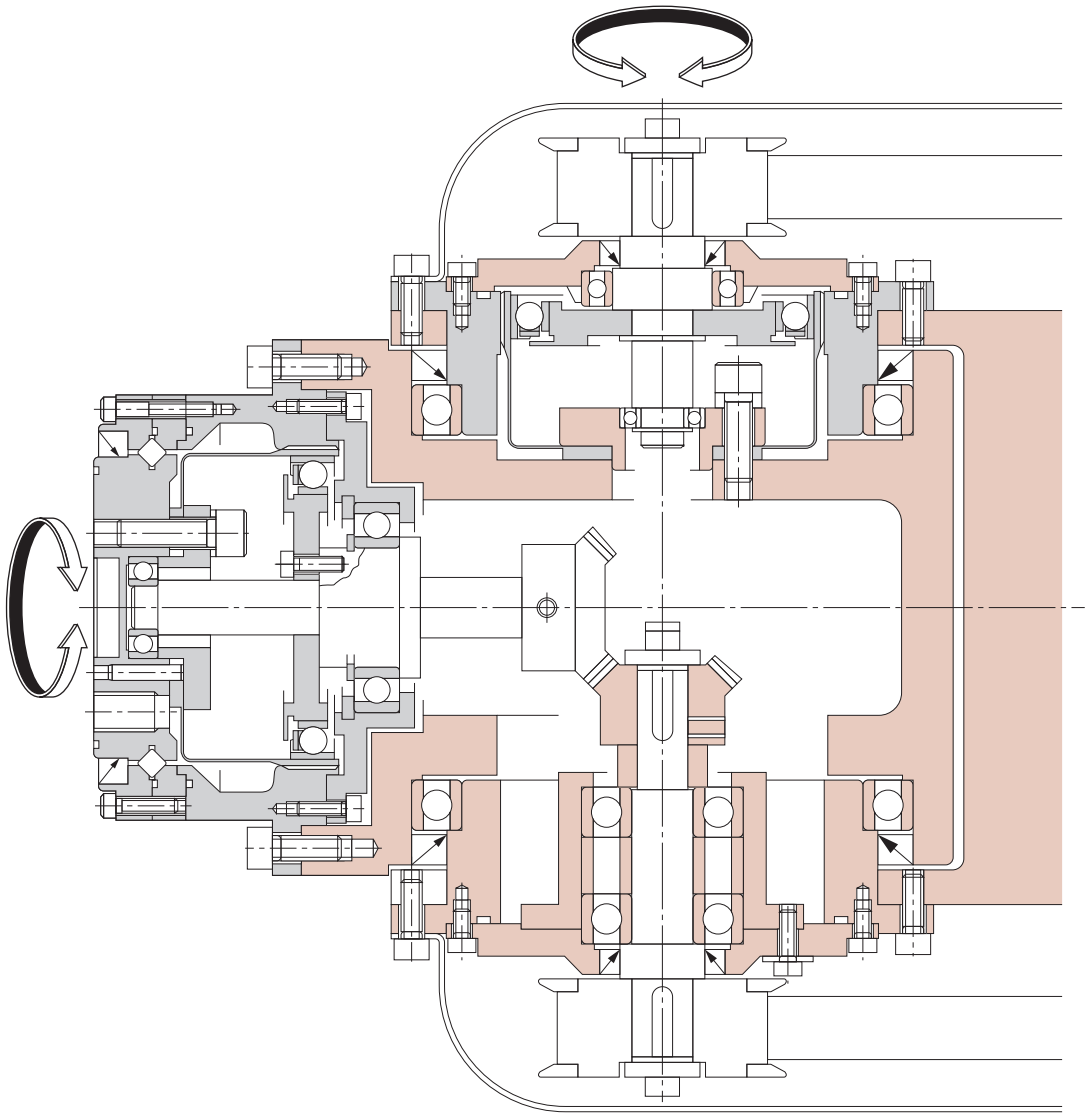

* For usage as this installation example, the sealing mechanism is required to prevent grease leakage.

Arm drive of the horizontal multijoint type robot

Fig. 144-1

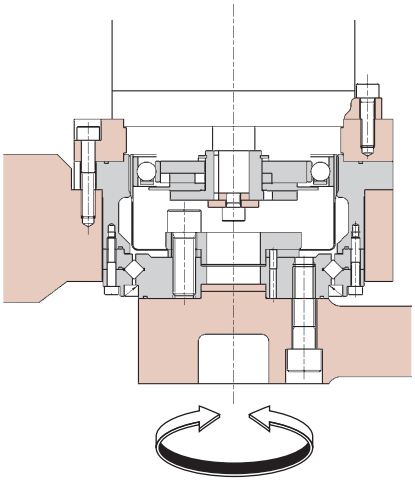

* For usage as this installation example, the sealing mechanism is required to prevent grease leakage.

Example of direct coupling of a servo motor

Fig. 144-2

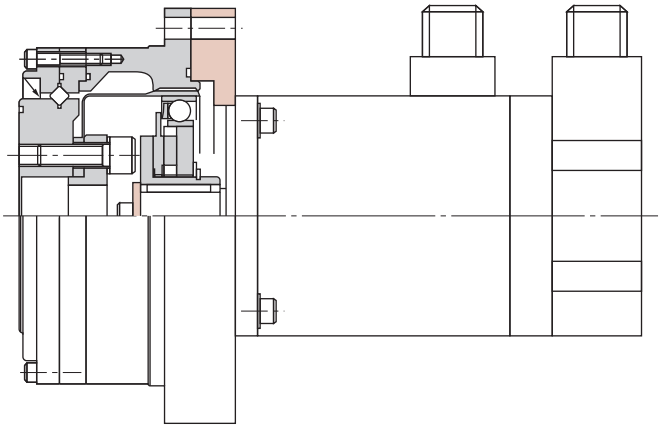

Example of a special shape

Fig. 144-3

This is an example of a type with an input shaft for easy handling.

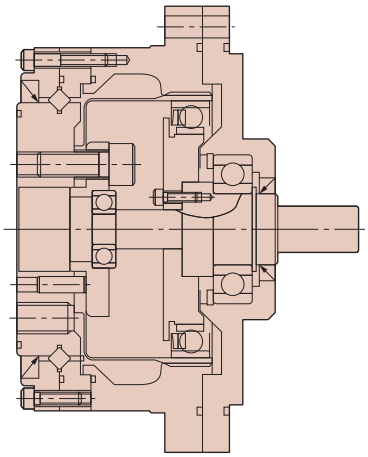

* Contact us for details of the special shape.

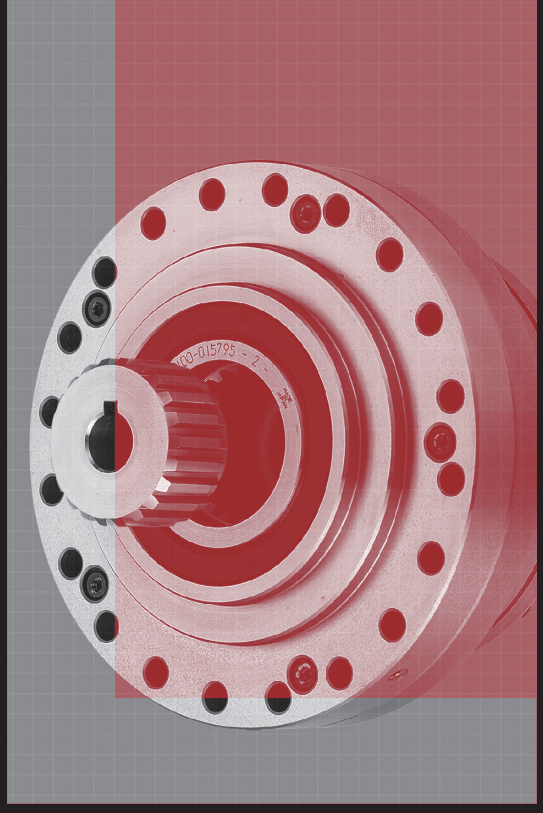

CSG Series Seal Structure Full Unit Type

Unit Type CSG

Features

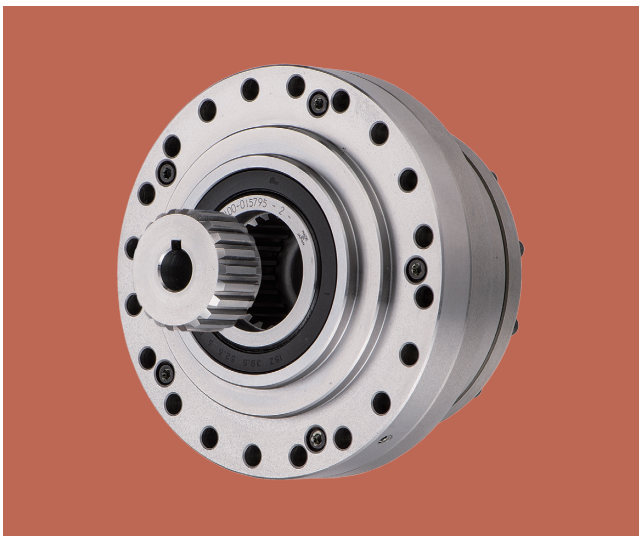

■CSG Series Seal Structure Full Unit Type

We have developed a sealed full unit model in the HarmonicDrive® CSG series. It has the highest specifications in the entire HarmonicDrive® series lineup. The product uses a sealing structure while maintaining the distinctive flat shape of the HarmonicDrive® series. It offers a simple design and ease-of-use.
Consider using it in the mechanized parts of work conveyors for standard industrial machinery and metal-cutting machines, magazine drives, and other applications.

CSG series features

- ■Reduces design man-hours for customers compared to prior products.
- ■Fewer parts for motor installation allows for more compact designs.
- ■Input splines make motor installation easy.

CSG Series Seal Structure Full Unit Type

Fig.146 -1

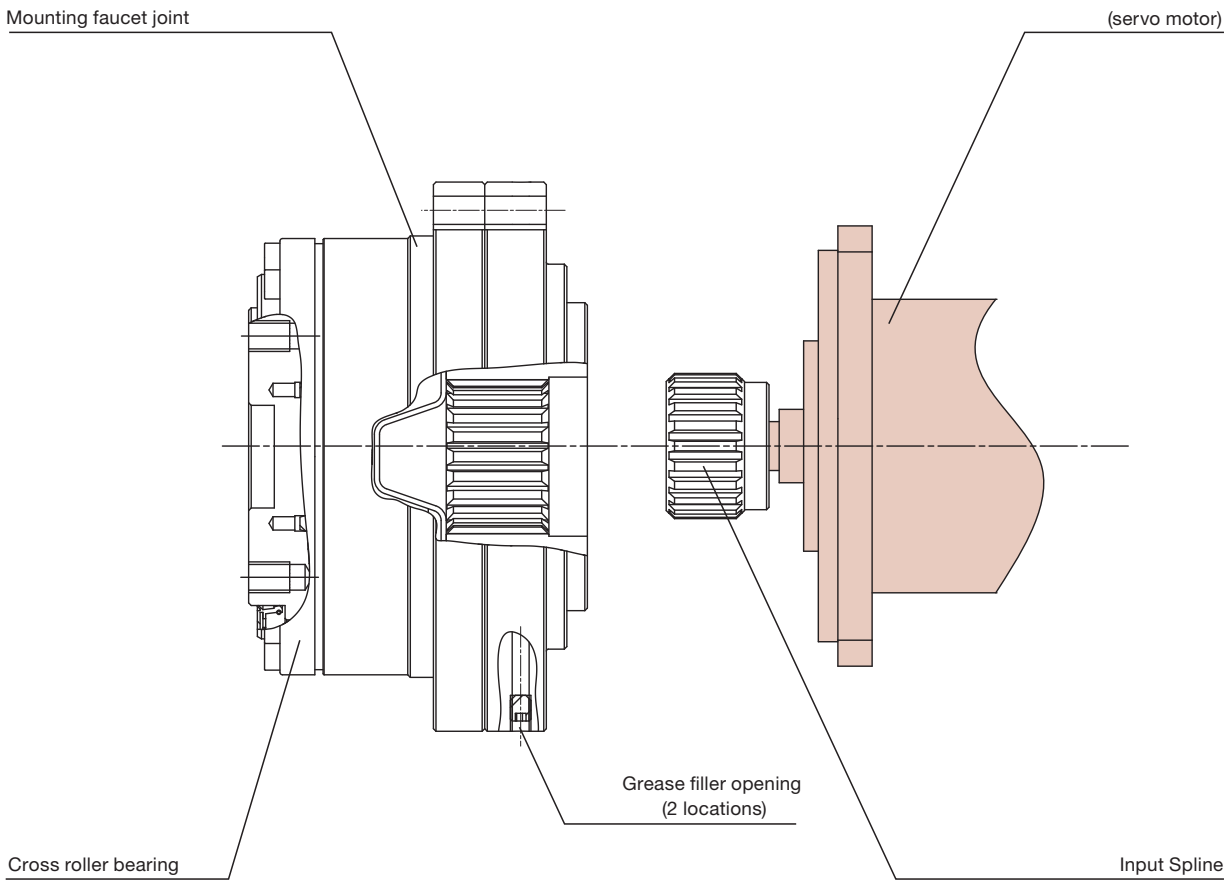

* Sealed structure full unit using oil seal on the output section.

Model and Symbol

CSG - 25 - 100 - 2UK - A01 - SP2

Table147 -1

Model name	Model	Reduction ratio*					Model	Spline Outside diameter	Form symbol (Consecutive, in order of design)	Special specification
CSG	25	50	80	100	120	160	2UK = Seal unit	A ... Approx. 29 mm B ... Approx. 44 mm C ... Approx. 54 mm	01 to 05	SP = Special specification No description = Standard product
	32	50	80	100	120	160				
	40	50	80	100	120	160				
	45	50	80	100	120	160				
	58	-	80	100	120	160				
	65	-	80	100	120	160				

* The reduction ratio indicates the value for the following condition.
Input: wave generator, fixed: circular spline, output: flexspline

Technical Data

Rating table

Table147 -2

Model	Reduction ratio	Rated torque at input 2000r/min		Permissible peak torque at start/stop		Permissible max. value of ave. load torque		Instantaneous permissible max. torque		Permissible max. input rotational speed (r/min)	Permissible ave. input rotational speed (r/min)	Inertia moment (Including input spline)	
		N·m	kgf·m	N·m	kgf·m	N·m	kgf·m	N·m	kgf·m	Grease lubricant	Grease lubricant	I $\times10^{-4}$ kg·m^2	J $\times10^{-5}$ kgf·ms^2
25	50	51	5.2	127	13	72	7.3	242	25	5600	3500	0.65	0.66
	80	82	8.4	178	18	113	12	332	34				
	100	87	8.9	204	21	140	14	369	38				
	120	87	8.9	217	22	140	14	382	39				
	160	87	8.9	229	23	140	14	382	39				
32	50	99	10	281	29	140	14	497	51	4800	3500	1.4	1.4
	80	153	16	395	40	217	22	738	75				
	100	178	18	433	44	281	29	841	86				
	120	178	18	459	47	281	29	842	86				
	160	178	18	484	49	281	29	842	86				
40	50	178	18	523	53	255	26	892	91	4000	3000	3.55	3.6
	80	268	27	675	69	369	38	1270	130				
	100	345	35	738	75	484	49	1400	143				
	120	382	39	802	82	586	60	1488	152				
	160	382	39	841	86	586	60	1488	152				
45	50	229	23	650	66	345	35	1235	126	3800	3000	8.78	8.9
	80	407	41	918	94	507	52	1651	168				
	100	459	47	982	100	650	66	2041	208				
	120	523	53	1070	109	806	82	2288	233				
	160	523	53	1147	117	819	84	2483	253				
58	80	714	73	1924	196	1001	102	3185	325	3000	2200	19.9	20.3
	100	905	92	2067	211	1378	141	4134	422				
	120	969	99	2236	228	1547	158	4329	441				
	160	969	99	2392	244	1573	160	4459	455				
65	80	969	99	2743	280	1352	138	4836	493	2800	1900	43.8	44.7
	100	1236	126	2990	305	1976	202	6175	630				
	120	1236	126	3263	333	2041	208	6175	630				
	160	1236	126	3419	349	2041	208	6175	630				

(Note) 1. Inertia moment I = 1/4 × GD2
2. See “Engineering data” on Page 012 for details of the terms.

On no-load running torque

No-load running torque means the torque on the input side (high-speed shaft side) required to put HarmonicDrive® under a no-load condition.

Measuring condition

Table148 -1

Reduction Ratio: 100			
Lubrication condition	Grease lubricant	Name	Harmonic grease® 4B No. 2
		Application qty.	Appropriate application qty.
Torque value is after running 2 hours or more at 2000 r/min input			

Temperature range of the operating environment

Table148 -2

Grease	Harmonic grease®4B No. 2 -10°C to +70°C

■Correction quantity by reduction

HarmonicDrive® no-load running torque differs depending on ratio. The following graphs show values for a reduction ratio of 100. Determine for other ratios using the correction quantities shown in Table 148-3.

Correction quantity for the no-load running torque

Table148 -3
Unit: cN·m

Model \ Reduction ratio	50	80	120	160
25	3.8	0.7	-0.5	-1.2
32	7.1	1.3	-0.9	-2.2
40	12	2.1	-1.5	-3.5
45	16	2.9	-2.1	-4.9
58	—	5.3	-3.8	-8.9
65	—	7.2	-5.1	-12

■No-load running torque at reduction ratio of 100

Input rotational speed: 500 r/min

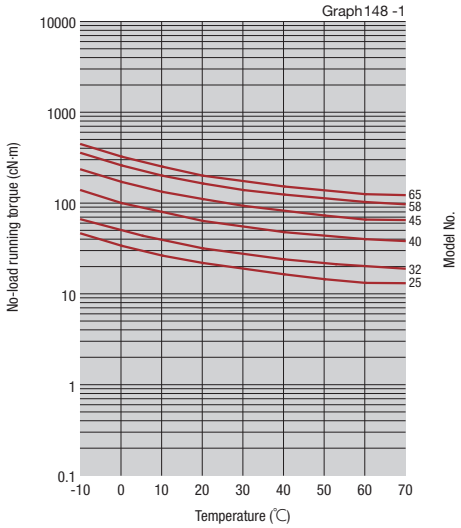

Input rotational speed: 1000 r/min

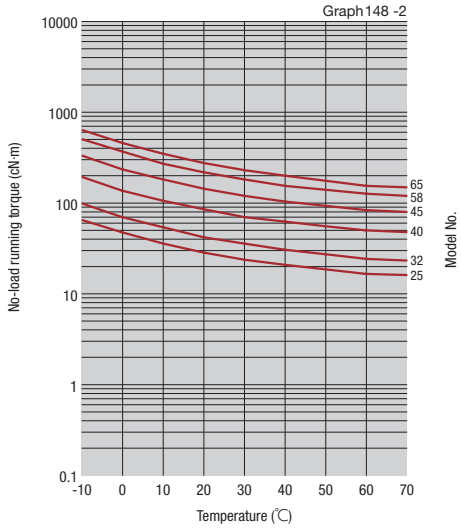

Input rotational speed: 2000 r/min

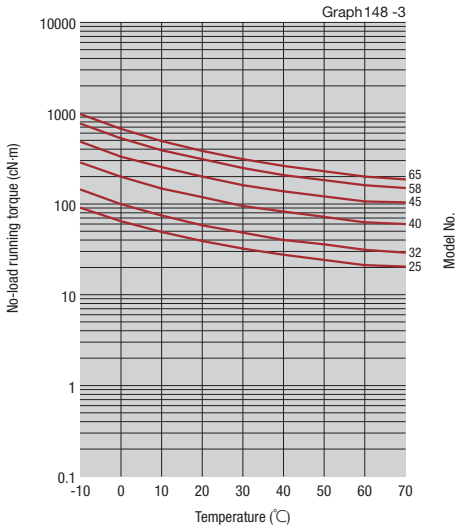

Input rotational speed: 3500 r/min

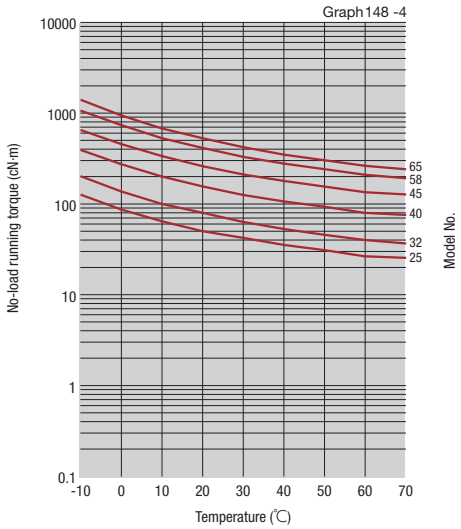

Note: These graph values are average "$\bar{X}$". $\sigma \fallingdotseq \bar{X} \times 0.2$

Efficiency characteristics

Efficiency varies according to the following factors.

- Reduction ratio
- Input rotational speed
- Load torque
- Temperature
- Lubrication condition (type and amount)

Note: Please contact us if using oil lubricant.

Measuring condition

Table 149 -1

Assembly	Recommended value		
Load torque	Rated torque shown in rated table		
Lubrication condition	Grease lubricant	Name	Harmonic grease® 4B No. 2
		Application qty.	Appropriate application qty.

■Efficiency correction coefficient and efficiency correction amount

■Efficiency correction calculation formula

To determine efficiency due to "efficiency correction coefficient due to load torque" and "efficiency correction amount due to model No.", use formula 149-1.

Symbols of the calculation formula

Table 149 -2

η	Efficiency	
Ke	Efficiency correction coefficient	Graph 149-1
η_R	Efficiency at rated torque	Graphs 149-2 to 149-4
ηe	Efficiency correction amount	Table 149-3

Calculation formula

Formula 149 -1

Efficiency $\eta = Ke \times (\eta_R + \eta e)$

■Efficiency correction coefficient due to load torque

When load torque is lower than rated torque, efficiency drops. Determine the correction coefficient Ke in Graph 149-1, and then refer to the efficiency correction calculation formula to determine efficiency.

Efficiency correction coefficient

Graph 149 -1

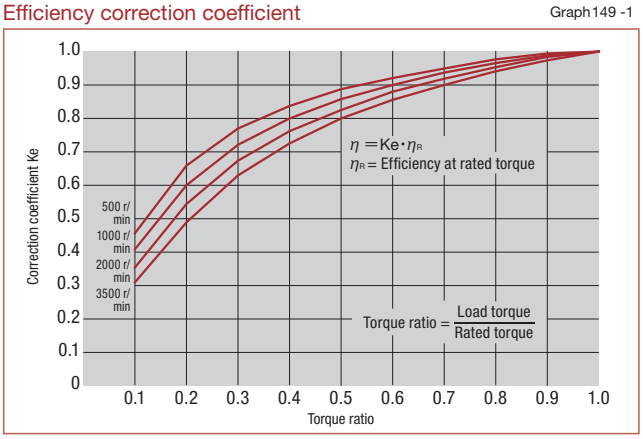

Note: When the load torque is greater than the rated torque the efficiency correction coefficient Ke = 1.

■Efficiency correction amount by model No.

With the CSG-2UK, input-side support bearings and oil seal are attached. The effect of these varies depending on the model number.

Use Table 149-3 to determine the correction amount (ηe) for efficiency at rated torque for each model number.

Efficiency correction amount by model No.

Table 149 -3

Unit: %

Model \ Reduction ratio	50	80	100	120	160
25	-2.0	-1.1	-4.7	-6.8	-5.8
32	1.4	2.6	0.5	-1.1	0.8
40	0.0	0.0	0.0	0.0	0.0
45	-3.7	-1.7	-4.0	-3.8	-2.5
58	—	0.6	0.2	-0.3	1.7
65	—	1.7	1.4	-0.1	1.9

■Efficiency at rated torque

Reduction ratio: 50

Graph 149 -2

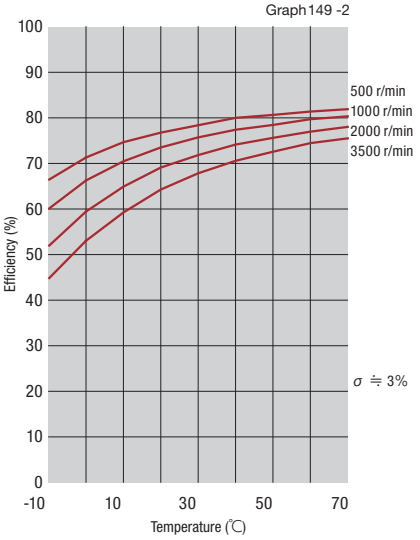

Reduction ratio: 80, 100, 120

Graph 149 -3

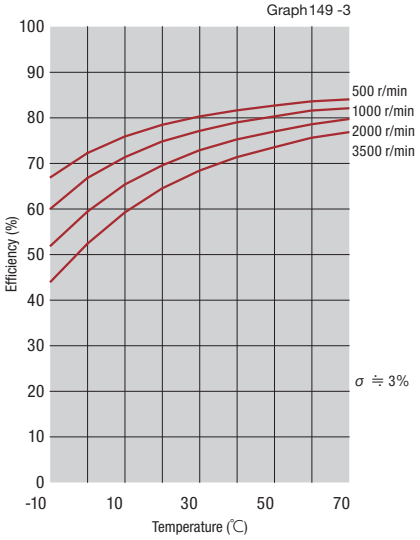

Reduction ratio: 160

Graph 149 -4

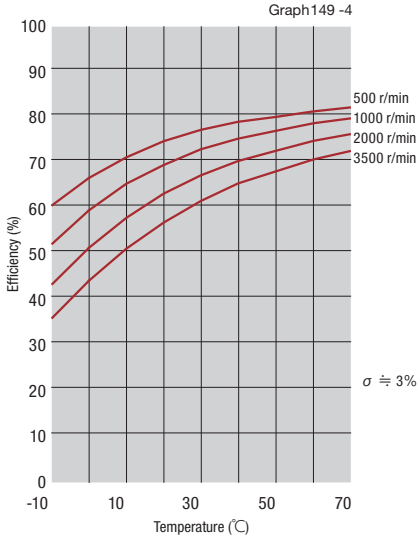

■Outline drawing

Fig.150 -1

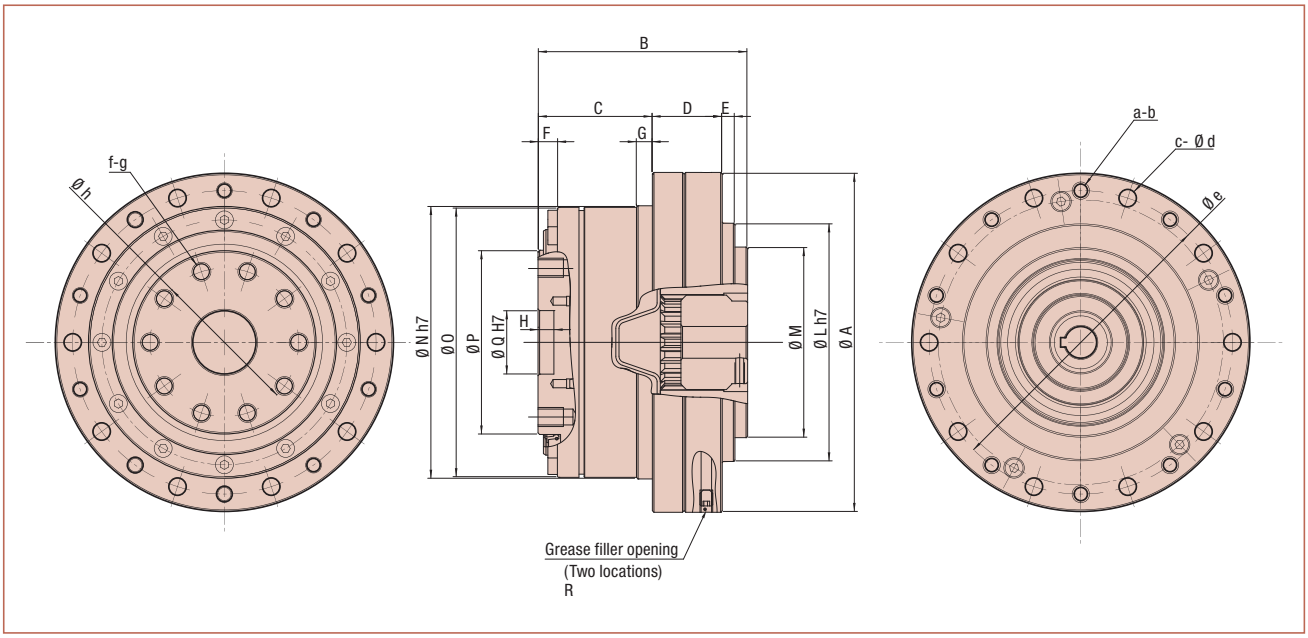

■Measurement table

Table150 -1
Unit: mm

Symbol \ Model	25	32	40	45	58	65
φA	107	138	160	180	226	260
B	66	75	85	102	120	129
C	36	45	50.5	58	77	84.5
D	22	24	30	32	37	38.5
E	4	4	4.5	7	6	6
F	6.1	6	7.1	7.6	8.5	9
H	5	5	5	6	10	6
φLh7	75	100	120	135	170	198
φM	60	60	-	108	-	-
φNh7	86	113	127	148	186	212
φO	85	112	126	147	185	210
φP	58	78	90	107	135	155
φQH7	20	26	32	32	46	52
R	M4 P=0.7	M5 P=0.8	M5 P=0.8	M6 P=1	M6 P=1	M6 P=1
a	10	12	10	12	12	8
b	M5	M6	M8	M8	M10	M12
c	10	12	10	12	12	8
φd	5.5	6.6	9	9	11	14
φe	96	125	144	164	206	236
f	10	10	12	12	8	12
g	M6	M8	M8	M10	M16	M14
φh	47	62	72	84	104	120
Mass (kg)	2.2	4.5	6.5	9.7	18.5	26.3

■Input spline external dimensions

Fig. 151 -1

• Input spline for straight key

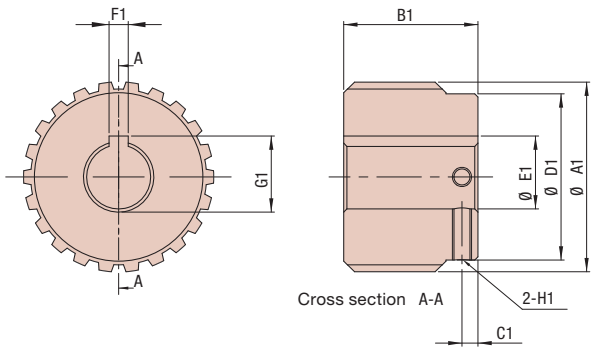

Fig. 151 -2

• Input spline for tapered shaft

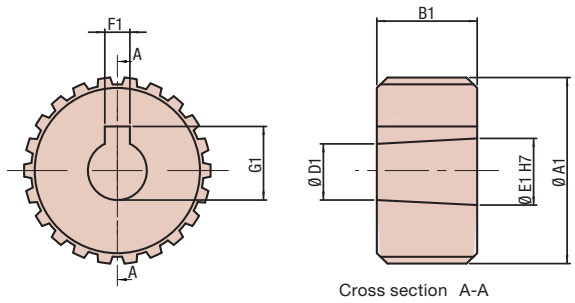

■Input spline external drawing measurements

Table151 -1
Unit: mm

Input Spline Form Symbol	A01		A02		A03		A04		A05	B01	B02	B03	C01			C02			C03			C04			C05		
Shaft shape	Straight ϕ14		Straight ϕ10		Tapered ϕ11		Tapered ϕ14		Tapered ϕ16	Straight ϕ24	Tapered ϕ16	Straight ϕ19	Straight ϕ35			Tapered ϕ16			Straight ϕ19			Straight ϕ24			Tapered ϕ32		
Model No.	25	32	25	32	25	32	25	32	32	40	40	40	45	58	65	45	58	65	45	58	65	45	58	65	45	58	65
ϕA1	29.75		29.75		29.75		29.75		29.75	44.667	44.667	44.667	54.5			54.5			54.5			54.5			54.5		
B1	21		21		16		19		29	37	29	37	62			29			37			37			50		
C1	2.5		2.5		-		-		-	5.8	-	5.8	12.5			-			5.8			5.8			-		
ϕD1	26		26		9.4		12.1		13.1	39.4	13.1	40	48			13.1			48			48			26		
ϕE1	$14^{+0.034}_{+0.016}$		$10^{+0.015}_{0}$		$11^{+0.018}_{0}$		$14^{+0.018}_{0}$		$16^{+0.018}_{0}$	$24^{+0.021}_{0}$	$16^{+0.018}_{0}$	$19^{+0.021}_{0}$	$35^{+0.035}_{+0.010}$			$16^{+0.018}_{0}$			$19^{+0.021}_{0}$			$24^{+0.021}_{0}$			$31^{+0.025}_{0}$		
F1	5 ±0.015		3 ±0.013		4 ±0.015		4 ±0.015		5 ±0.015	8 ±0.018	5 ±0.015	6 ±0.015	10 ±0.018			5 ±0.015			6 ±0.015			8 ±0.018			7 ±0.018		
G1	$16.3^{+0.1}_{0}$		$11.4^{+0.1}_{0}$		$12.5^{+0.1}_{0}$		$15.8^{+0.1}_{0}$		$17.6^{+0.1}_{0}$	$27.3^{+0.2}_{0}$	$17.6^{+0.1}_{0}$	$21.8^{+0.1}_{0}$	$38.3^{+0.2}_{0}$			$17.6^{+0.1}_{0}$			$21.8^{+0.1}_{0}$			$27.3^{+0.2}_{0}$			$33.8^{+0.1}_{0}$		
H1	M3		M3		-		-		-	M5	-	M5	M5			-			M5			M5			-		

■Input flange axial range dimensions

Fig. 151 -3

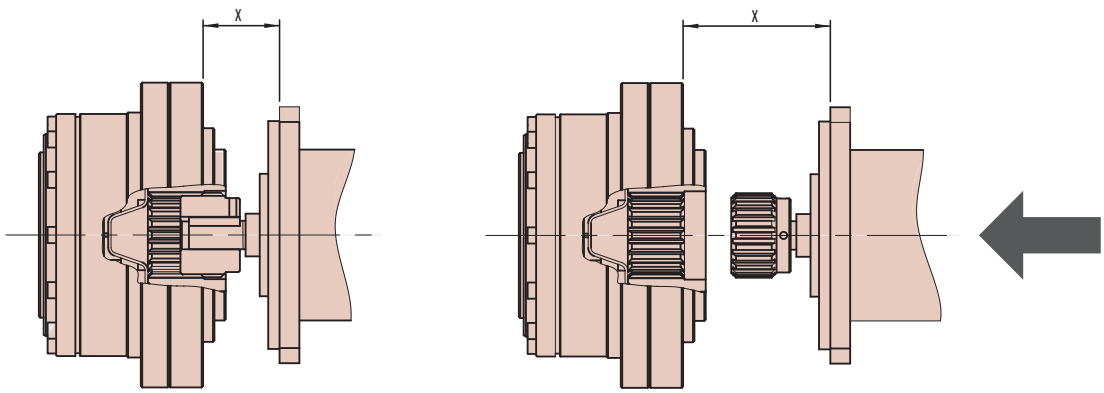

X: Input flange width range

■Input flange axial range drawing measurements

Table151 -2
Unit: mm

Input Spline Form Symbol	A01		A02		A03		A04		A05	B01	B02	B03	C01			C02			C03			C04			C05		
Shaft shape	Straight ϕ14		Straight ϕ10		Tapered ϕ11		Tapered ϕ14		Tapered ϕ16	Straight ϕ24	Tapered ϕ16	Straight ϕ19	Straight ϕ35			Tapered ϕ16			Straight ϕ19			Straight ϕ24			Tapered ϕ32		
Model No.	25	32	25	32	25	32	25	32	32	40	40	40	45	58	65	45	58	65	45	58	65	45	58	65	45	58	65
Xmin	13	11	13	11	13	11	14	11	21	22	14.5	22.5	48.8	31.6	27.8	16	11	-	24	-	-	23	9	-	63.5	43.8	38.8
Xmax	17.1	14	21.1	18	16.1	13.5	19.1	16	28	33.8	25.8	34.8	56.8	56.2	56.2	22	21.4	-	31	-	-	34.3	29.4	-	67.3	62.4	62.4

Servo motor matching table

Key to table content

CSG-25-50	Line 1: Model No.
(0.7)	Line 2: Reducer inertia ($\times 10^{-4}$ kg·m^2)
(0.2)	Line 3: Inertia ratio (reducer inertia/motor inertia)

Table color key

Model	Color	Model	Color	Model	Color
25		40		58	
32		45		65	

Fanuc αiS Series

Table152 -1

Motor series	Reduction ratio 50	80	100	120	160
αiS 2/5000	CSG-25-50 (0.7) (0.2)	CSG-25-80 (0.7) (0.2)	CSG-25-100 (0.7) (0.2)	CSG-25-120 (0.7) (0.2)	CSG-32-160 (1.4) (0.5)
αiS 2/6000	CSG-25-50 (0.7) (0.2)	CSG-25-80 (0.7) (0.2)	CSG-25-100 (0.7) (0.2)	CSG-25-120 (0.7) (0.2)	CSG-32-160 (1.4) (0.5)
αiS 4/5000	CSG-32-50 (1.4) (0.3)	CSG-32-80 (1.4) (0.3)	CSG-32-100 (1.4) (0.3)	CSG-32-120 (1.4) (0.3)	CSG-32-160 (1.4) (0.3)
αiS 8/4000	CSG-40-50 (3.5) (0.3)	CSG-40-80 (3.5) (0.3)	CSG-40-100 (3.5) (0.3)	CSG-40-120 (3.5) (0.3)	
	CSG-45-50 (8.8) (0.8)	CSG-45-80 (8.8) (0.8)	CSG-45-100 (8.8) (0.8)	CSG-45-120 (8.8) (0.8)	CSG-45-160 (8.8) (0.8)
αiS 8/6000	CSG-40-50 (3.5) (0.3)	CSG-40-80 (3.5) (0.3)	CSG-40-100 (3.5) (0.3)	CSG-40-120 (3.5) (0.3)	CSG-40-160 (3.5) (0.3)
			CSG-45-100 (8.8) (0.8)	CSG-45-120 (8.8) (0.8)	CSG-45-160 (8.8) (0.8)
αiS 12/4000	CSG-40-50 (3.5) (0.2)				
	CSG-45-50 (8.8) (0.4)	CSG-45-80 (8.8) (0.4)	CSG-45-100 (8.8) (0.4)	CSG-45-120 (8.8) (0.4)	CSG-45-160 (8.8) (0.4)
					CSG-58-160 (19.9) (0.9)
αiS 22/4000		CSG-58-80 (19.9) (0.9)	CSG-58-100 (19.9) (0.9)	CSG-58-120 (19.9) (0.9)	CSG-58-160 (19.9) (0.9)
		CSG-65-80 (43.8) (0.8)	CSG-65-100 (43.8) (0.8)	CSG-65-120 (43.8) (0.8)	CSG-65-160 (43.8) (0.8)

Fanuc αiF Series

Table152 -2

Motor series	Reduction ratio 50	80	100	120	160
αiF 1/5000					CSG-25-160 (0.7) (0.2)
αiF 2/5000	CSG-25-50 (0.7) (0.1)	CSG-25-80 (0.7) (0.1)	CSG-25-100 (0.7) (0.1)	CSG-25-120 (0.7) (0.1)	
					CSG-32-160 (1.4) (0.3)
αiF 4/4000	CSG-32-50 (1.4) (0.1)	CSG-32-80 (1.4) (0.1)	CSG-32-100 (1.4) (0.1)	CSG-32-120 (1.4) (0.1)	
					CSG-40-160 (3.5) (0.3)
αiF 8/3000	CSG-40-50 (3.5) (0.1)	CSG-40-80 (3.5) (0.1)	CSG-40-100 (3.5) (0.1)	CSG-40-120 (3.5) (0.1)	CSG-40-160 (3.5) (0.1)
				CSG-45-120 (8.8) (0.3)	CSG-45-160 (8.8) (0.3)
αiF 12/3000	CSG-45-50 (8.8) (0.1)	CSG-45-80 (8.8) (0.1)	CSG-45-100 (8.8) (0.1)	CSG-45-120 (8.8) (0.1)	
					CSG-58-160 (19.9) (0.3)
αiF 22/3000		CSG-58-80 (19.9) (0.2)	CSG-58-100 (19.9) (0.2)	CSG-58-120 (19.9) (0.2)	CSG-58-160 (19.9) (0.2)
				CSG-65-120 (43.8) (0.4)	CSG-65-160 (43.8) (0.4)

Fanuc βiS Series

Table153 -1

Motor series	Reduction ratio 50	80	100	120	160
βiS 2/4000	CSG-25-50 (0.7) (0.2)	CSG-25-80 (0.7) (0.2)	CSG-25-100 (0.7) (0.2)	CSG-25-120 (0.7) (0.2)	CSG-25-160 (0.7) (0.2)
βiS 4/4000	CSG-25-50 (0.7) (0.1)	CSG-25-80 (0.7) (0.1)			
		CSG-32-80 (1.4) (0.3)	CSG-32-100 (1.4) (0.3)	CSG-32-120 (1.4) (0.3)	CSG-32-160 (1.4) (0.3)
βiS 8/3000	CSG-40-50 (3.5) (0.3)	CSG-40-80 (3.5) (0.3)	CSG-40-100 (3.5) (0.3)	CSG-40-120 (3.5) (0.3)	CSG-40-160 (3.5) (0.3)
					CSG-45-160 (8.8) (0.8)
βiS 12/2000	CSG-40-50 (3.5) (0.2)	CSG-40-80 (3.5) (0.2)	CSG-40-100 (3.5) (0.2)	CSG-40-120 (3.5) (0.2)	CSG-40-160 (3.5) (0.2)
	CSG-45-50 (8.8) (0.4)		CSG-45-100 (8.8) (0.4)	CSG-45-120 (8.8) (0.4)	CSG-45-160 (8.8) (0.4)
βiS 12/3000	CSG-40-50 (3.5) (0.2)	CSG-40-80 (3.5) (0.2)	CSG-40-100 (3.5) (0.2)	CSG-40-120 (3.5) (0.2)	
	CSG-45-50 (8.8) (0.4)	CSG-45-80 (8.8) (0.4)	CSG-45-100 (8.8) (0.4)	CSG-45-120 (8.8) (0.4)	CSG-45-160 (8.8) (0.4)
βiS 22/1500	CSG-45-50 (8.8) (0.2)	CSG-45-80 (8.8) (0.2)	CSG-45-100 (8.8) (0.2)	CSG-45-120 (8.8) (0.2)	
				CSG-58-120 (19.9) (0.4)	CSG-58-160 (19.9) (0.4)
βiS 22/2000	CSG-45-50 (8.8) (0.2)	CSG-45-80 (8.8) (0.2)	CSG-45-100 (8.8) (0.2)	CSG-45-120 (8.8) (0.2)	
				CSG-58-120 (19.9) (0.4)	CSG-58-160 (19.9) (0.4)
					CSG-65-160 (43.8) (0.8)

Specification of the main roller bearing

Table154 -1

Model	Pitch circle diameter of a roller	Offset amount	Basic dynamic rated load (C)		Basic static rated load (C0)		Permissible moment load (Mc)		Moment stiffness	
	m	m	$\times 10^2$ N	kgf	$\times 10^2$ N	kgf	N·m	kgf·m	$\times 10^4$ N·m/rad	kgf·m/arc-min
25	0.064	0.0118	96	980	151	1540	128	13.1	19.8	5.9
32	0.083	0.0133	150	1530	250	2550	257	26.2	44.2	13.1
40	0.096	0.0148	213	2170	365	3720	369	37.7	74.6	22.1
45	0.111	0.0158	230	2350	426	4340	563	57.4	116	34.4
58	0.141	0.0205	518	5290	904	9230	838	85.4	201	59.6
65	0.160	0.0185	556	5670	1030	10500	1525	156	331	108

Design guide

Installation and transmission torque

Output flange (CRB) side installation and transmission torque

Table154 -2

Model		25	32	40	45	58	65
Number of bolts		10	10	12	12	8	12
Bolt size		M6	M8	M8	M10	M16	M14
Installation P.C.D.	mm	47	62	72	84	104	120
Bolt tightening torque	N·m	18.4	45	45	88	382	246
	kgf·m	1.88	4.6	4.6	9.0	39.0	25.1
Bolt transmission torque	N·m	448	1090	1519	2778	6211	7900
	kgf·m	46	111	155	283	634	806

Input flange side installation and transmission torque

Table154 -3

Model		25	32	40	45	58	65
Number of bolts		10	12	10	12	12	8
Bolt size		M5	M6	M8	M8	M10	M12
Installation P.C.D.	mm	96	125	144	164	206	236
Bolt tightening torque	N·m	9	15.3	37.2	37.2	73.5	128
	kgf·m	0.92	1.56	3.8	3.8	7.5	13.1
Bolt transmission torque	N·m	541	1194	2095	2863	5678	6312
	kgf·m	55	122	214	292	579	644

Mechanical precision

Fig.155 -1

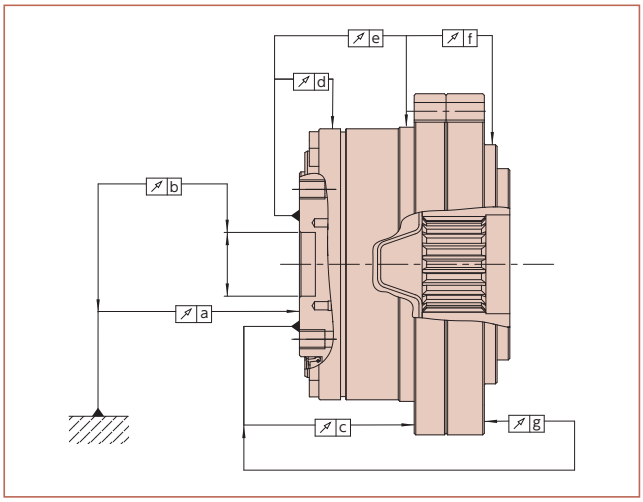

Table155 -1
Unit: mm

Model / Symbol	25	32	40	45	58	65
a	0.015	0.015	0.015	0.018	0.018	0.018
b	0.013	0.013	0.015	0.015	0.017	0.017
c	0.045	0.056	0.060	0.068	0.076	0.085
d	0.010	0.010	0.015	0.015	0.015	0.015
e	0.049	0.049	0.060	0.065	0.070	0.075
f	0.157	0.172	0.185	0.200	0.212	0.218
g	0.051	0.061	0.058	0.063	0.075	0.096

Installation precision

In the assembly design, maintain the input flange recommended precision shown in Drawing 155-2 and Table 155-2 in order to fully realize the superior performance possessed by the unit type.

Fig.155 -2

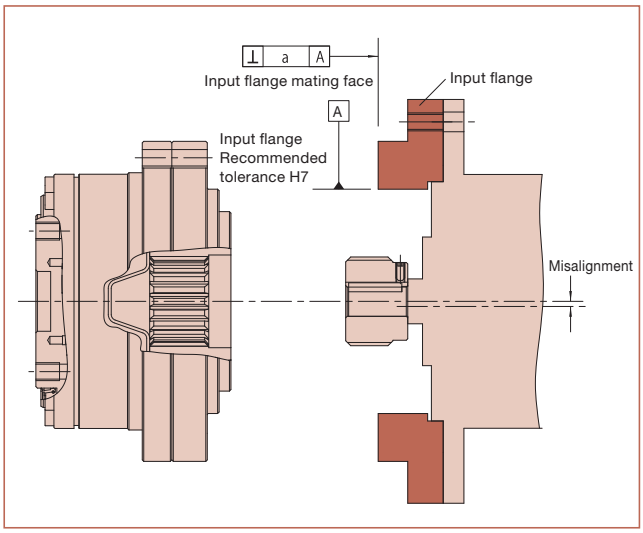

Table155 -2
Unit: mm

Model / Symbol	25	32	40	45	58	65
a	0.024	0.026	0.026	0.027	0.031	0.034
Misalign-ment	0.014	0.014	0.020	0.019	0.019	0.019

Motor installation examples

Motor straight shaft

Fig.155 -3

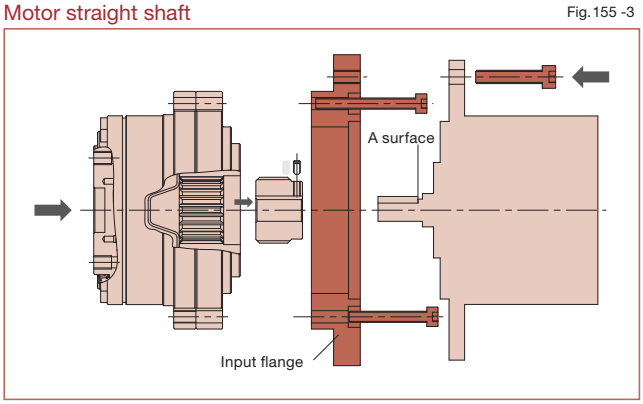

To maintain installation precision, we recommend the following order of assembly.
1. Insert and connect the spline to the motor shaft.
2. Install and connect the spline to the unit.
3. Insert the motor into the unit at the level of the spline and connect.

Motor tapered shaft

Fig.155 -4

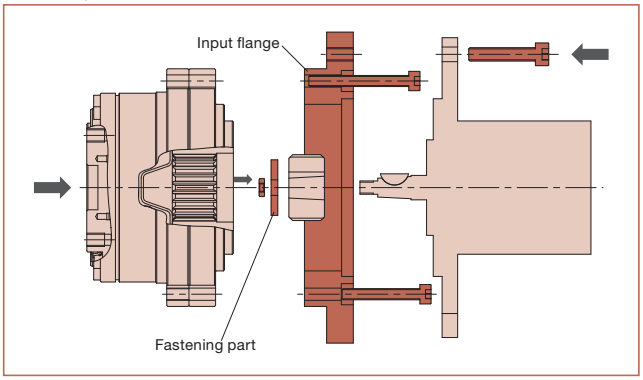

* Customers provide input flange, connecting parts separately.

Lubrication

Harmonic grease® 4B No. 2 is the lubricant used for the reducer and cross roller bearing parts.
Because lubrication is already applied on the unit side, grease or lubricant does not need to be applied to the splines during assembly.

Fig.156 -1

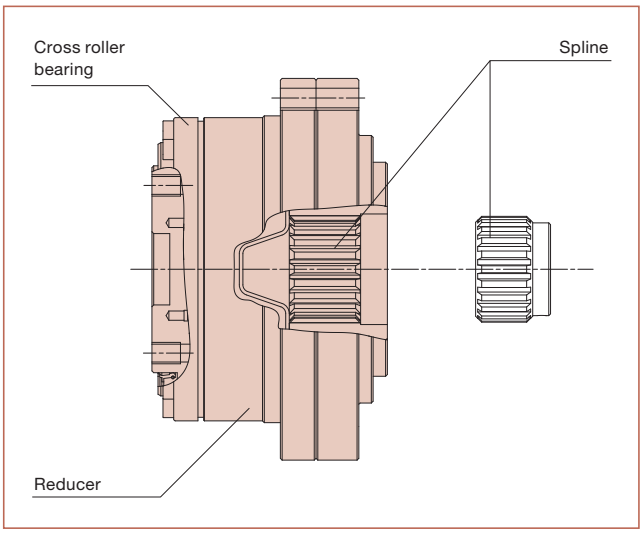

Table156 -1

Reducer	Harmonic grease® 4B No. 2
Cross roller bearing	Harmonic grease® 4B No. 2
Spline	Molub-Alloy 777

Continuous operating time

The internal temperature of the CSG-2UK rises due to the effect of the oil seal and support bearings used on the input shaft (high-speed side). Keep continuous operating times within the ranges indicated in Table 156-3.
The continuous operating times shown in Table 156-3 are based on the amount of time it takes for the unit's internal temperature to rise to 80ºC and the oil seal area temperature to 100ºC, under the configuration conditions shown in Table 156-2.
When operating for a continuous period, refer to Table 156-3 and ensure that the temperatures do not exceed the above temperatures.
If the above temperatures are exceeded, the following measures may be required. Please consult us in this situation.

- Early replacement of lubrication
- Measures to dissipate unit heat
- Measures to prevent lubrication leakage when unit internal pressure rises
- Measures to stop oil seal deterioration due to heat

Note: Under stated conditions, the internal temperature of models 25 and 32 does not exceed 80ºC.

Configuration conditions

Table156 -2

Ambient temperature:	25ºC
Input rotational speed	2000 r/min
Radiation plate	None (unit heat dissipation only)

Operating time

Table156 -3

Model	No-load operation Continuous operating time (minutes)
25	- (See note)
32	- (See note)
40	35
45	50
58	50
65	50

Notes and cautions

- Note that radial load on the input side cannot be permitted.
- The product surface is not treated for rust prevention.
  If it is necessary to avoid rust, apply a rust inhibitor to the surface.
  Contact us if you want us to treat the surface for rust prevention.

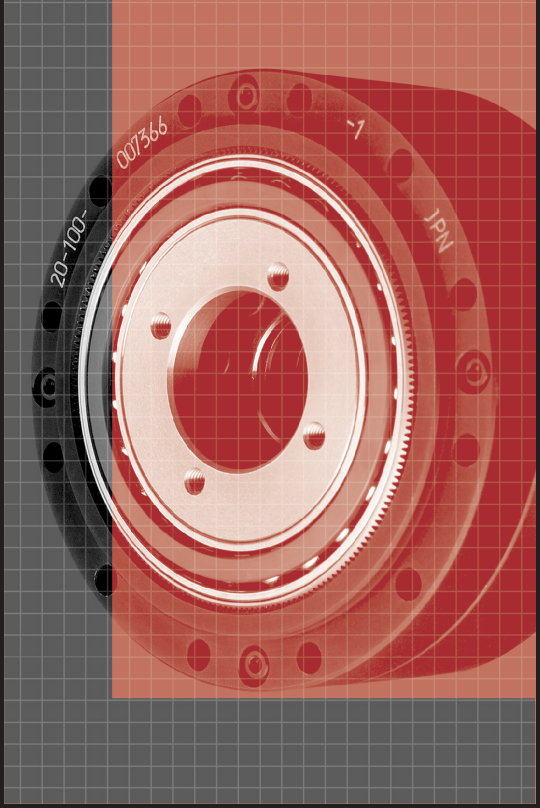

CSD Series

Unit Type CSD

Features

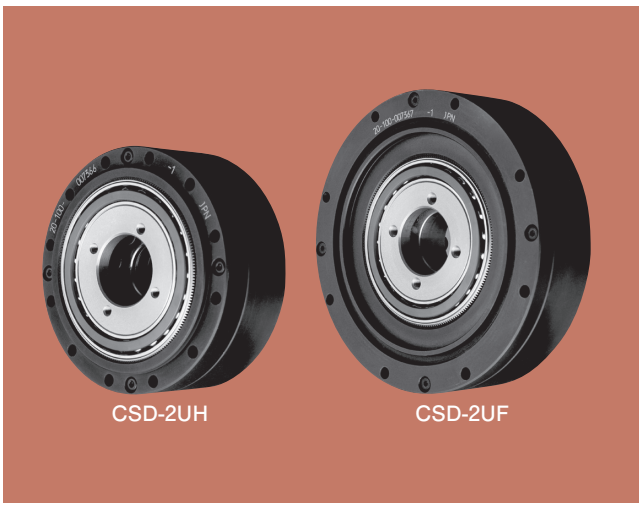

■CSD series unit type

For example, the technology for humanoid robots which are in the spotlight recently or the aerospace industry requests maximization of “lightness”. On the other hand, the technology for semiconductor or LCD production equipment requests maximization of “thinness” due to the height restriction for system line.
HarmonicDrive® fulfills the requirements from the markets by realizing the most compact and lightweight CSD series which features innovative shape while succeeds excellent performance of conventional lineup.

Features of CSD series

- ■Compact and simple design
- ■Hollow structure
- ■High moment capacity
- ■Enhancing load capacity of output shaft bearing

Structure of CSD series unit type

Fig. 158-1

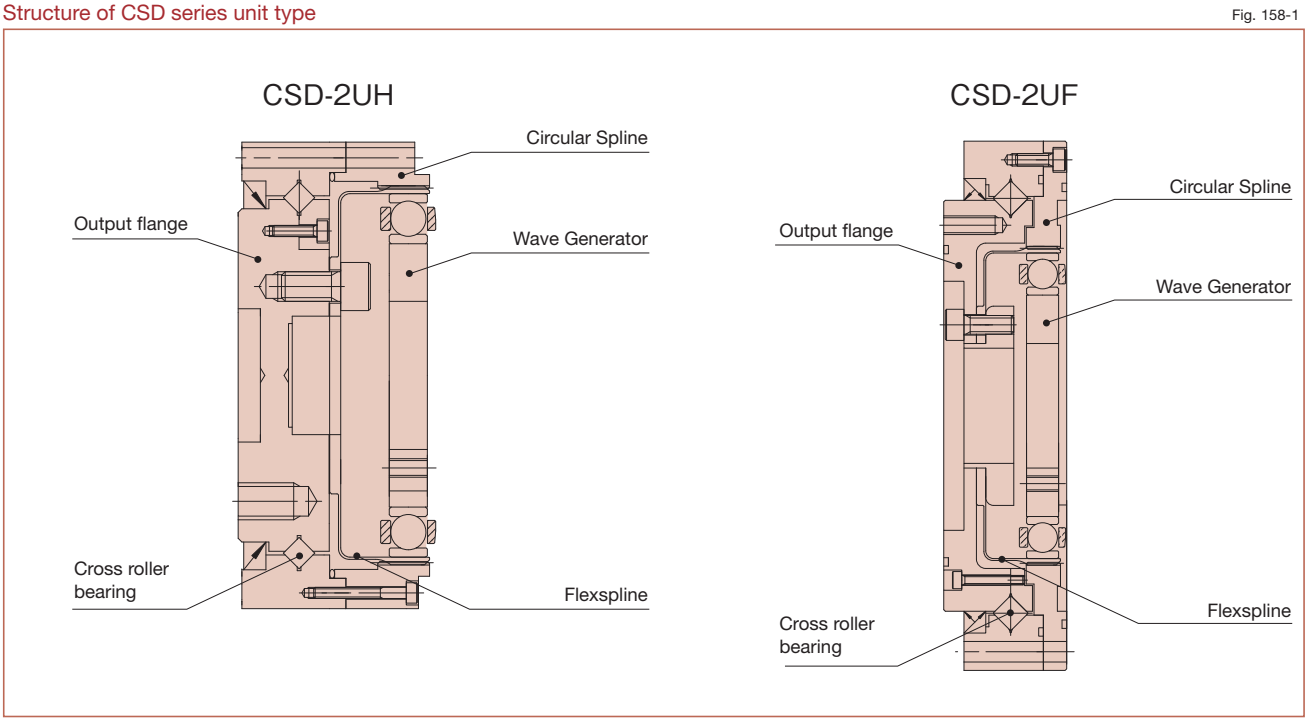

Model and Symbol

CSD - 20 - 100 - 2UH - SP

Table 159-1

Model name	Model	Reduction ratio*					Model	Special specification
CSD: Super flat and cup shape HarmonicDrive®	14	50	80	100	—	—	2UH=Unit type (Model No. 14 to 50) 2UF=Type with hollow structure and main roller bearing capacity enhanced (Model No. 14 to 40)	None= Standard product SP = Special specifications such as shapes and performance
	17	50	80	100	120	—		
	20	50	80	100	120	160		
	25	50	80	100	120	160		
	32	50	80	100	120	160		
	40	50	80	100	120	160		
	50	50	80	100	120	160		

* The reduction ratio indicates the value for the following condition.
Input: wave generator, fixed: circular spline, output: flexspline

Technical Data

Rating table

■CSD-2UH

Table 159-2

Model	Reduction ratio	Rated torque at input 2000r/min		Permissible peak torque at start/stop		Permissible max. value of ave. load torque		Instantaneous permissible max. torque		Permissible max. input rotational speed (r/min)	Permissible ave. input rotational speed (r/min)	Inertia moment	
		N·m	kgf·m	N·m	kgf·m	N·m	kgf·m	N·m	kgf·m	Grease lubricant	Grease lubricant	I ($\times10^{-4}$kg·m^2)	J ($\times10^{-5}$kgf·ms^2)
14	50	3.7	0.38	12	1.2	4.8	0.49	24	2.4	8500	3500	0.021	0.021
	80	5.4	0.55	16	1.6	7.7	0.79	35	3.6				
	100	5.4	0.55	19	1.9	7.7	0.79	35	3.6				
17	50	11	1.1	23	2.3	18	1.8	48	4.9	7300	3500	0.054	0.055
	80	15	1.5	29	3.0	19	1.9	61	6.2				
	100	16	1.6	37	3.8	27	2.8	71	7.2				
	120	16	1.6	37	3.8	27	2.8	71	7.2				
20	50	17	1.7	39	4.0	24	2.4	69	7.0	6500	3500	0.090	0.092
	80	24	2.4	51	5.2	33	3.4	89	9.1				
	100	28	2.9	57	5.8	34	3.5	95	9.7				
	120	28	2.9	60	6.1	34	3.5	95	9.7				
	160	28	2.9	64	6.5	34	3.5	95	9.7				
25	50	27	2.8	69	7.0	38	3.9	127	13	5600	3500	0.282	0.288
	80	44	4.5	96	9.8	60	6.1	179	18				
	100	47	4.8	110	11	75	7.6	184	19				
	120	47	4.8	117	12	75	7.6	204	21				
	160	47	4.8	123	13	75	7.6	204	21				
32	50	53	5.4	151	15	75	7.6	268	27	4800	3500	1.09	1.11
	80	83	8.5	213	22	117	12	398	41				
	100	96	9.8	233	24	151	15	420	43				
	120	96	9.8	247	25	151	15	445	45				
	160	96	9.8	261	27	151	15	445	45				
40	50	96	9.8	281	29	137	14	480	49	4000	3000	2.85	2.91
	80	144	15	364	37	198	20	686	70				
	100	185	19	398	41	260	27	700	71				
	120	205	21	432	44	315	32	765	78				
	160	206	21	453	46	316	32	765	78				
50	50	172	18	500	51	247	25	1000	102	3500	2500	8.61	8.78
	80	260	27	659	67	363	37	1300	133				
	100	329	34	686	70	466	48	1440	147				
	120	370	38	756	77	569	58	1565	160				
	160	370	38	823	84	590	60	1715	175				

(Note) Inertia moment: $I=\frac{1}{4}GD^2$

CSD-2UF

Table 160-1

Model	Reduction ratio	Rated torque at input 2000r/min		Permissible peak torque at start/stop		Permissible max. value of ave. load torque		Instantaneous permissible max. torque		Permissible max. input rotational speed (r/min)	Permissible ave. input rotational speed (r/min)	Inertia moment	
		N·m	kgf·m	N·m	kgf·m	N·m	kgf·m	N·m	kgf·m	Grease lubricant	Grease lubricant	I ($\times10^{-4}$kg·m^2)	J ($\times10^{-5}$kgf·ms^2)
14	50	3.7	0.38	12	1.2	4.8	0.49	24	2.4	8500	3500	0.021	0.021
	80	5.4	0.55	16	1.6	7.7	0.79	35	3.6				
	100	5.4	0.55	19	1.9	7.7	0.79	35	3.6				
17	50	11	1.1	23	2.3	18	1.8	48	4.9	7300	3500	0.054	0.055
	80	15	1.5	29	3.0	19	1.9	61	6.2				
	100	16	1.6	37	3.8	27	2.8	71	7.2				
	120	16	1.6	37	3.8	27	2.8	71	7.2				
20	50	17	1.7	39	4.0	24	2.4	69	7.0	6500	3500	0.090	0.092
	80	24	2.4	51	5.2	33	3.4	89	9.1				
	100	28	2.9	57	5.8	34	3.5	95	9.7				
	120	28	2.9	60	6.1	34	3.5	95	9.7				
	160	28	2.9	64	6.5	34	3.5	95	9.7				
25	50	27	2.8	69	7.0	38	3.9	127	13	5600	3500	0.282	0.288
	80	44	4.5	96	9.8	60	6.1	179	18				
	100	47	4.8	110	11	75	7.6	184	19				
	120	47	4.8	117	12	75	7.6	204	21				
	160	47	4.8	123	13	75	7.6	204	21				
32	50	53	5.4	151	15	75	7.6	268	27	4800	3500	1.09	1.11
	80	83	8.5	213	22	117	12	398	41				
	100	96	9.8	233	24	151	15	420	43				
	120	96	9.8	247	25	151	15	445	45				
	160	96	9.8	261	27	151	15	445	45				
40	50	96	9.8	281	29	137	14	480	49	4000	3000	2.85	2.91
	80	144	15	364	37	198	20	686	70				
	100	185	19	398	41	260	27	700	71				
	120	205	21	432	44	315	32	765	78				
	160	206	21	453	46	316	32	765	78				

(Note) Inertia moment: $I=\frac{1}{4}GD^2$

Outline drawing of CSD-2UH

Fig. 161-1

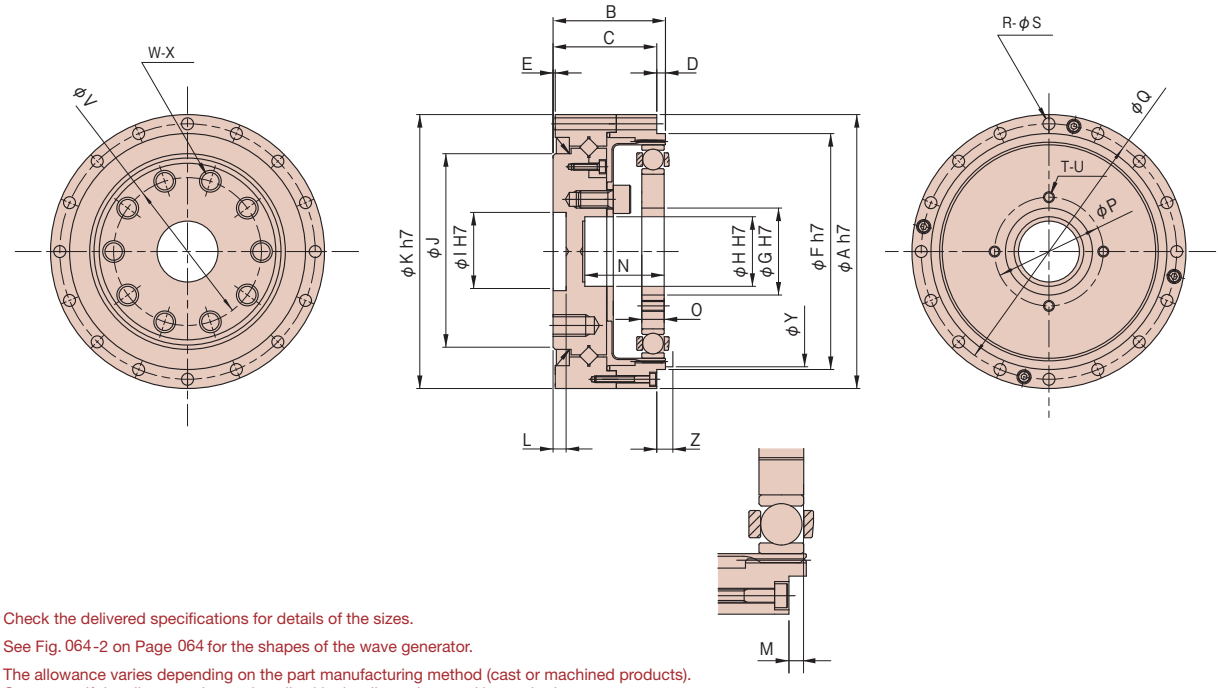

* Check the delivered specifications for details of the sizes.
* See Fig. 064-2 on Page 064 for the shapes of the wave generator.
* The allowance varies depending on the part manufacturing method (cast or machined products). Contact us if the allowance is not described in the dimensions and is required.

Measurement table of CSD-2UH

Table 161-1
Unit: mm

Symbol \ Model	14	17	20	25	32	40	50
ϕA h7	55	62	70	85	112	126	157
B	25	26.5	29.7	37.1	43	51.7	62.5
C	23	24.5	27.7	34.1	40	47.7	58.5
D	2	2	2	3	3	4	4
E	0.5	0.5	0.5	0.5	1	1	1
ϕF h7	42.5	49.5	58	73	96	108.5	136
ϕG H7	11	15	20	24	32	40	50
ϕH H7	11	11	16	20	30	32	44
ϕI H7	12	14	18	24	32	36	48
ϕJ	31	38	45	58	78	90	112
ϕK h7	55	62	70	85	112	126	157
L	5	5	5	5.5	5.5	6	7
M	$1.7^{0}_{-0.2}$	$1.7^{0}_{-0.2}$	$1.7^{0}_{-0.2}$	$2.6^{0}_{-0.2}$	$2.5^{0}_{-0.2}$	$3.4^{0}_{-0.2}$	$3.2^{0}_{-0.2}$
N	14.8	16.3	18.8	23.7	30.6	36.5	44.3
O	$4^{0}_{-0.1}$	$5^{0}_{-0.1}$	$5.2^{0}_{-0.1}$	$6.3^{0}_{-0.1}$	$8.6^{0}_{-0.1}$	$10.3^{0}_{-0.1}$	$12.7^{0}_{-0.1}$
ϕP (PCD)	17	21	26	30	40	50	60
ϕQ (PCD)	49	56	64	79	104	117.5	147
R	6	10	12	18	18	18	22
ϕS	3.4	3.4	3.4	3.4	4.5	5.5	6.6
T	4	4	4	4	4	4	4
U	M3	M3	M3	M3	M4	M5	M6
ϕV (PCD)	25	27	34	42	57	72	88
W	10	8	8	8	10	10	10
X	M3×7	M5×8	M6×9	M8×12	M8×12	M10×15	M12×18
ϕY	38	45	53	66	86	106	133
Z	3	3	3.5	4.5	5	6.5	7.5
Mass (kg)	0.35	0.46	0.65	1.2	2.4	3.6	6.9

Outline drawing of CSD-2UF

Fig. 162-1

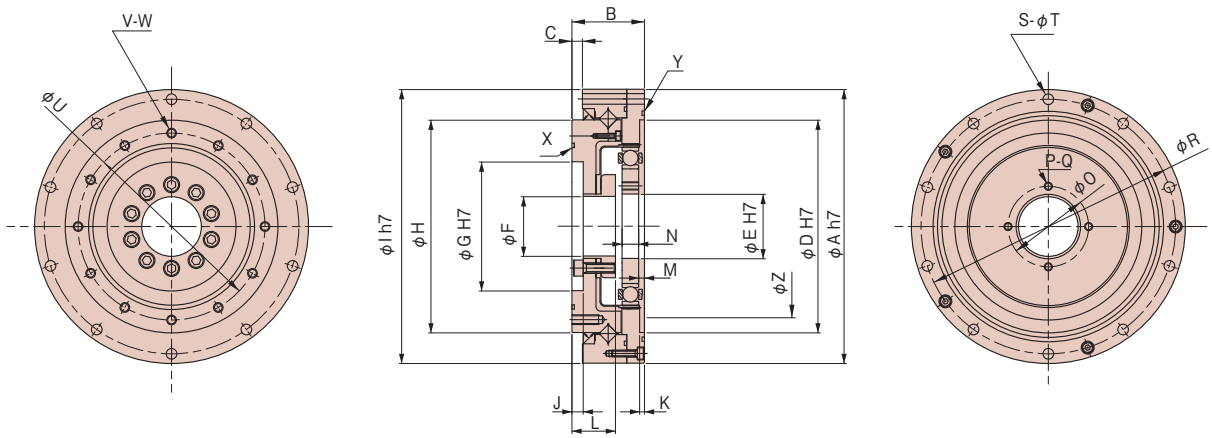

* Check the delivered specifications for details of the sizes.
* See Fig. 064-2 on Page 064 for the shapes of the wave generator.
* The allowance varies depending on the part manufacturing method (cast or machined products). Contact us if the allowance is not described in the dimensions and is required.

Measurement table of CSD-2UF

Table 162-1
Unit: mm

Symbol \ Model	14	17	20	25	32	40
φA h7	70	80	90	110	142	170
B	22	22.7	26.8	31.5	37	45
C	0.5	0.5	2.3	2.1	2.8	6.5
φD H7	48	56	64	80	106	132
φE H7	11	15	20	24	32	40
φF	9	9	18	22	29	37
φG H7	30	34	40	52	70	80
φH	49	59	69	84	110	132
φI h7	70	80	90	110	142	170
J	4.9	5.4	4.8	5.5	6	7
K	2.5	2.5	2.5	3	3	3
L	12.9	13.4	16.8	19.5	22	27
M	$2.8^{+0.2}_{0}$	$2.8^{+0.2}_{0}$	$2.8^{+0.2}_{0}$	$3.4^{+0.2}_{0}$	$3.5^{+0.2}_{0}$	$3.6^{+0.2}_{0}$
N	$4^{0}_{-0.1}$	$5^{0}_{-0.1}$	$5.2^{0}_{-0.1}$	$6.3^{0}_{-0.1}$	$8.6^{0}_{-0.1}$	$10.3^{0}_{-0.1}$
φO (PCD)	17	21	26	30	40	50
P	4	4	4	4	4	4
Q	M3	M3	M3	M3	M4	M5
φR (PCD)	64	74	84	102	132	158
S	6	8	8	10	10	10
φT	3.4	3.4	3.4	4.5	5.5	6.6
φU (PCD)	42	50	60	73	96	116
V	8	10	8	8	8	12
W	M3×5	M3×6	M4×8	M5×8	M6×10	M6×10
X	34.5×0.8	38.0×1.2	S48	S60	S80	S100
Y	49.0×1.50	59.4×1.20	S70	S85	S115	S140
φZ	38	45	53	66	86	106
Mass (kg)	0.50	0.66	0.94	1.7	3.3	5.7

Angle transmission accuracy

See "Engineering data" for a description of terms.

Table 163-1

Model		14	17	20	25	32	40	50
Angle transmission error	$\times10^{-4}$rad	4.4	4.4	2.9	2.9	2.9	2.9	2.9
	arc-min	1.5	1.5	1.0	1.0	1.0	1.0	1.0

Hysteresis loss

See "Engineering data" for a description of terms.

Table 163-2

Reduction ratio	Model / Unit	14	17	20	25	32	40	50
50	$\times10^{-4}$rad	7.3	5.8	5.8	5.8	5.8	5.8	5.8
	arc-min	2.5	2.0	2.0	2.0	2.0	2.0	2.0
80 or more	$\times10^{-4}$rad	5.8	2.9	2.9	2.9	2.9	2.9	2.9
	arc-min	2.0	1.0	1.0	1.0	1.0	1.0	1.0

Rigidity (Spring constant)

See "Engineering data" for a description of terms.

Table 163-3

Item		Model / Unit	14	17	20	25	32	40	50
T_1		N·m	2.0	3.9	7.0	14	29	54	108
		kgf·m	0.2	0.4	0.7	1.4	3.0	5.5	11
T_2		N·m	6.9	12	25	48	108	196	382
		kgf·m	0.7	1.2	2.5	4.9	11	20	39
Reduction ratio 50	K_1	$\times10^4$N·m/rad	0.29	0.67	1.1	2.0	4.7	8.8	17
		kgf·m/arc-min	0.085	0.2	0.32	0.6	1.4	2.6	5.0
	K_2	$\times10^4$N·m/rad	0.37	0.88	1.3	2.7	6.1	11	21
		kgf·m/arc-min	0.11	0.26	0.4	0.8	1.8	3.4	6.3
	K_3	$\times10^4$N·m/rad	0.47	1.2	2.0	3.7	8.4	15	30
		kgf·m/arc-min	0.14	0.34	0.6	1.1	2.5	4.5	9.0
	θ_1	$\times10^{-4}$rad	6.9	5.8	6.4	7.0	6.2	6.1	6.4
		arc-min	2.4	2.0	2.2	2.4	2.1	2.1	2.2
	θ_2	$\times10^{-4}$rad	19	14	19	18	18	18	18
		arc-min	6.4	4.6	6.6	6.1	6.1	5.9	6.2
Reduction ratio 80 or more	K_1	$\times10^4$N·m/rad	0.4	0.84	1.3	2.7	6.1	11	21
		kgf·m/arc-min	0.12	0.25	0.4	0.8	1.8	3.2	6.3
	K_2	$\times10^4$N·m/rad	0.44	0.94	1.7	3.7	7.8	14	29
		kgf·m/arc-min	0.13	0.28	0.5	1.1	2.3	4.2	8.5
	K_3	$\times10^4$N·m/rad	0.61	1.3	2.5	4.7	11	20	37
		kgf·m/arc-min	0.18	0.39	0.75	1.4	3.3	5.8	11
	θ_1	$\times10^{-4}$rad	5.0	4.6	5.4	5.2	4.8	4.9	5.1
		arc-min	1.7	1.6	1.8	1.8	1.7	1.7	1.7
	θ_2	$\times10^{-4}$rad	16	13	15	13	14	14	13
		arc-min	5.4	4.3	5.0	4.5	4.8	4.8	4.6

* The values in this table are reference values. The lower-limit value is approximately 80% of the displayed value.

Starting torque

See "Engineering data" for a description of terms. As the values in the table below vary depending on the use conditions, use them as reference values.

CSD-2UH

Table 163-4
Unit: cN·m

Reduction ratio \ Model	14	17	20	25	32	40	50
50	4.4	6.7	8.9	16	32	55	102
80	3.2	4.4	5.7	10	22	36	68
100	2.8	3.8	5.1	9.1	20	32	60
120	—	3.6	4.5	8.2	17	29	56
160	—	—	3.9	7.2	15	26	47

CSD-2UF

Table 163-5
Unit: cN·m

Reduction ratio \ Model	14	17	20	25	32	40
50	5.3	7.5	9.7	17	34	58
80	3.8	4.9	6.2	11	23	37
100	3.2	4.2	5.5	9.6	21	33
120	—	4.0	4.8	8.6	18	30
160	—	—	4.1	7.4	16	27

Overdrive starting torque

See "Engineering data" for a description of terms. As the values in the table below vary depending on the use conditions, use them as reference values.

CSD-2UH

Table 164-1
Unit: N·m

Reduction ratio \ Model	14	17	20	25	32	40	50
50	2.9	4.3	5.2	9.5	19	33	61
80	2.9	4.1	5.7	10	21	35	66
100	3.5	4.6	6.0	11	23	38	71
120	—	5.1	6.4	12	24	41	78
160	—	—	7.4	13	30	48	89

CSD-2UF

Table 164-2
Unit: N·m

Reduction ratio \ Model	14	17	20	25	32	40
50	3.3	4.7	5.6	10	20	34
80	3.3	4.5	6.1	10	22	36
100	3.9	5.0	6.4	11	24	39
120	—	5.6	6.8	12	25	42
160	—	—	7.8	14	31	49

Ratcheting torque

See "Engineering data" for a description of terms.

Table 164-3
Unit: N·m

Reduction ratio \ Model	14	17	20	25	32	40	50
50	88	150	220	450	980	1800	3700
80	110	200	350	680	1400	2800	5400
100	84	160	260	500	1000	2100	4100
120	—	120	240	470	980	1900	3800
160	—	—	220	450	980	1800	3600

Buckling torque

See "Engineering data" for a description of terms.

Table 164-4
Unit: N·m

Model	14	17	20	25	32	40	50
All Ratios	190	330	560	1000	2200	4300	8000

On no-load running torque

No-load running torque means the torque on the input side (high-speed shaft side) required to put HarmonicDrive® under a no-load condition.

Measuring condition

Table 165-1

Reduction ratio 100			
Lubrication condition	Grease lubrication	Name	Harmonic grease® SK-1A (model 20 or more)
			Harmonic grease® SK-2 (model 14, 17)
		Application qty.	Appropriate application qty.
The torque value is the value after a trial run for two hours or longer at an input of 2000 r/min.			

■No-load running torque for a reduction ratio of 100

■CSD-2UH

Input rotational speed: 500r/min

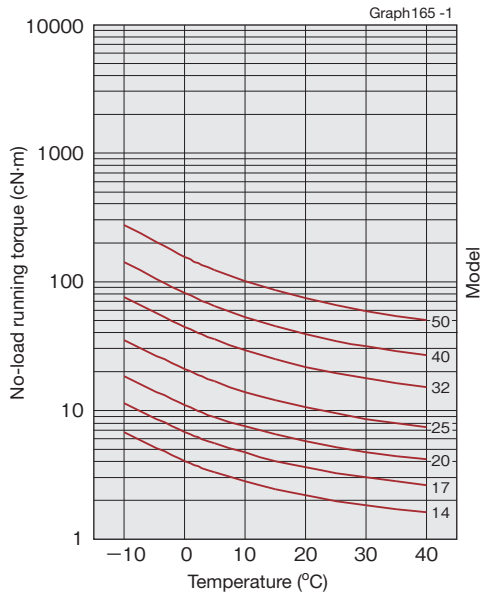

Input rotational speed: 1000r/min

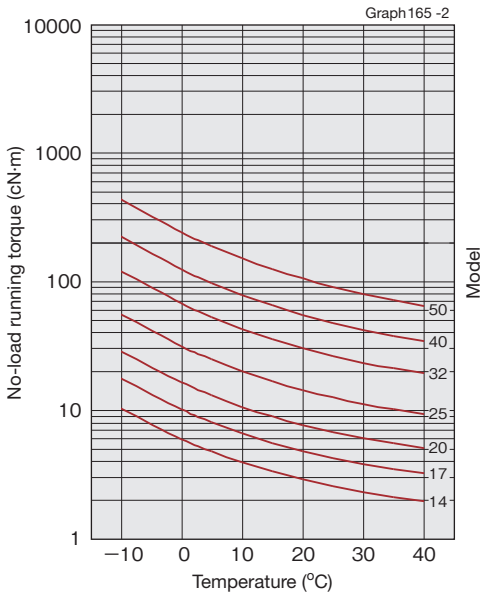

Input rotational speed: 2000r/min

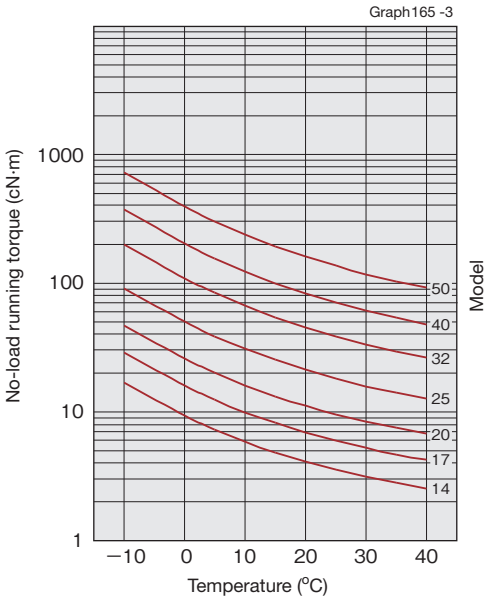

Input rotational speed: 3500r/min

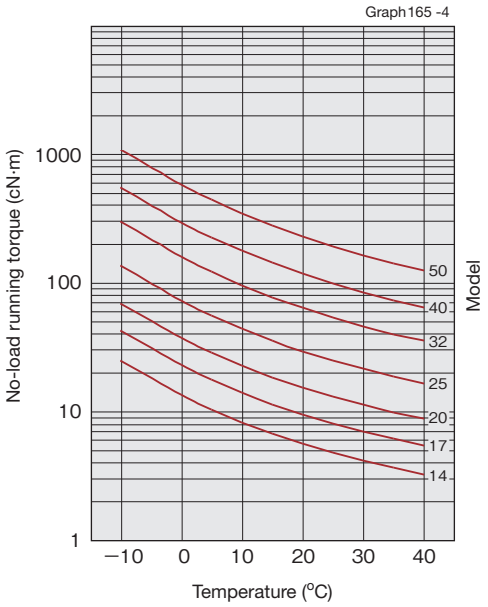

*The values in this graph are average values ($\overline{X}$). $\sigma \fallingdotseq \overline{X} \times 0.2$

■CSD-2UF

Input rotational speed: 500r/min

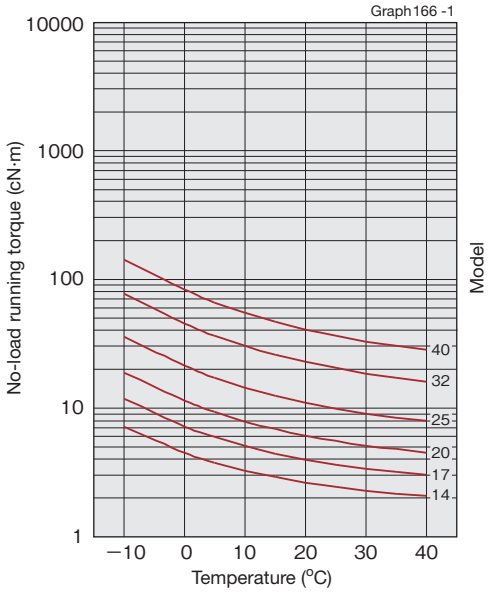

Input rotational speed: 1000r/min

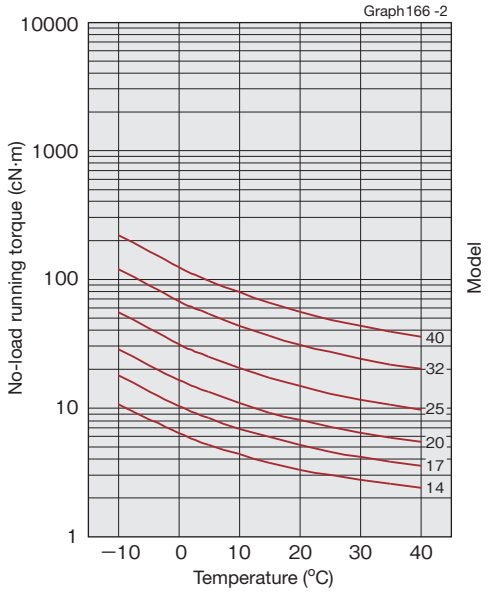

Input rotational speed: 2000r/min

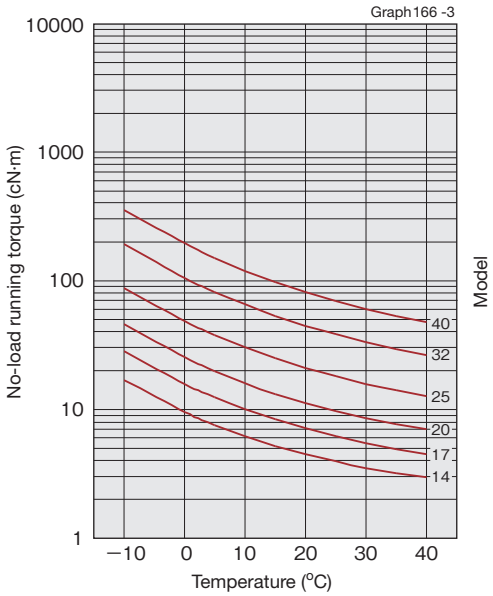

Input rotational speed: 3500r/min

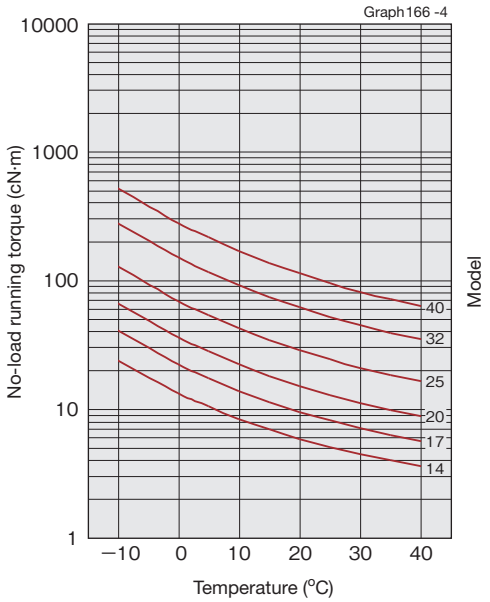

*The values in this graph are average values ($\bar{X}$). $\sigma \fallingdotseq \bar{X} \times 0.2$

■Correction quantity by reduction

The no-load running torque of HarmonicDrive® varies depending on the reduction ratio. Graphs 165-1 to 166-4 show the values for a reduction ratio of 100. Obtain other reduction ratios by adding the correction quantity shown in the right-hand table (Table 166-1).

Correction quantity for the no-load running torque

Table 166-1
Unit: cN·m

Model \ Reduction ratio	2UH				2UF			
	50	80	120	160	50	80	120	160
14	+0.93	+0.2	—	—	+1.4	+0.3	—	—
17	+1.5	+0.3	-0.2	—	+1.8	+0.4	-0.3	—
20	+2.3	+0.4	-0.3	-0.70	+2.6	+0.5	-0.4	-0.84
25	+3.8	+0.7	-0.5	-1.2	+4.3	+0.8	-0.6	-1.3
32	+7.3	+1.3	-0.9	-2.2	+8.2	+1.5	-1.1	-2.5
40	+12	+2.1	-1.5	-3.6	+14	+2.5	-1.8	-4.2
50	+22	+3.8	-2.7	-6.4	—	—	—	—

Efficiency characteristics

The efficiency varies depending on the following conditions.

- Reduction ratio
- Input rotational speed
- Load torque
- Temperature
- Lubrication condition (Type of lubricant and the quantity)

Measuring condition

Table 167-1

Built-in	Measurement by building the recommended built-in precision into the product		
Load torque	The rated torque shown in the ratings (see the Page 159)		
* When load torque is smaller than rated torque, the efficiency value gets low. See efficiency correction coefficient below.			
Lubricating condition	Grease lubrication	Name	Harmonic grease® SK-1A (model 20 or more)
			Harmonic grease® SK-2 (model 14, 17)
		Application qty.	Appropriate application qty.

■Efficiency correction coefficient and efficiency correction amount

■Efficiency correction calculation formula

To determine efficiency due to "efficiency correction coefficient due to load torque" and "efficiency correction amount due to model No.", use formula 167-1.

Calculation formula

Formula 167 -1

Efficiency $\eta = Ke \times (\eta_R + \eta e)$

Symbols of the calculation formula

Table 167 -2

η	Efficiency	
Ke	Efficiency correction coefficient	Graph 167-1, 2
η_R	Efficiency at rated torque	Graphs 168-1 to 169-5
ηe	Efficiency correction amount	Table 167-3, 4

■Efficiency correction coefficient due to load torque

When load torque is lower than rated torque, efficiency drops. Determine the correction coefficient Ke in Graph 167-1, 2, and then refer to the efficiency correction calculation formula to determine efficiency.

Efficiency correction coefficient

■CSD-2UH

Graph 167 -1

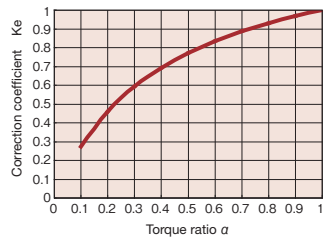

■CSD-2UF

Graph 167 -2

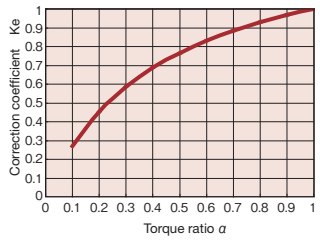

Note: When the load torque is greater than the rated torque the efficiency correction coefficient Ke = 1.

■Efficiency correction amount by model No.

With the CSD-2UH, CSD-2UF, input-side support bearings and oil seal are attached. The effect of these varies depending on the model number.

Use Table 167-3, 4 to determine the correction amount (ηe) for efficiency at rated torque for each model number.

Efficiency correction amount by model No.

Table 167 -3

Unit: %

■CSD-2UH

Reduction ratio / Model	50	80	100	120	160
14	0.0	3.1	0.0	—	—
17	3.0	2.3	0.4	-2.2	—
20	2.4	2.3	1.8	-0.7	1.3
25	-0.3	1.8	-0.1	-2.7	-0.7
32	-1.4	-0.1	-0.8	-3.4	-1.6
40	-1.4	-0.9	0.0	-0.9	1.0
50	-2.4	-1.9	-1.2	-1.9	0.0

Table 167 -4

Unit: %

■CSD-2UF

Reduction ratio / Model	50	80	100	120	160
14	0.0	2.9	0.0	—	—
17	1.9	1.6	-0.2	-2.8	—
20	1.8	1.9	1.5	-0.9	1.1
25	-0.1	1.6	-0.3	-2.8	-0.8
32	-1.9	-0.3	-0.9	-3.5	-1.6
40	-1.7	-1.0	-0.1	-6.7	1.0

■Efficiency at rated torque

■CSD-2UH

Model 14/ Reduction ratio 50

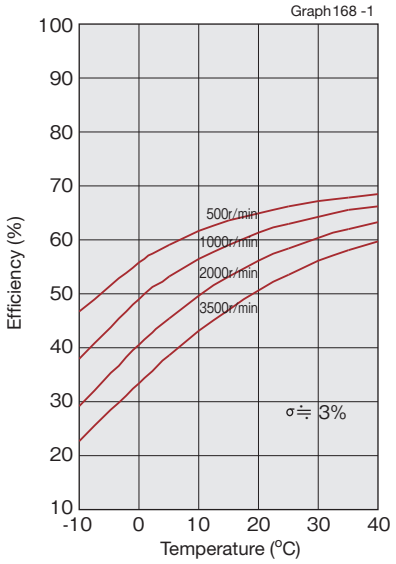

Model 14/ Reduction ratio 80, 100, 120

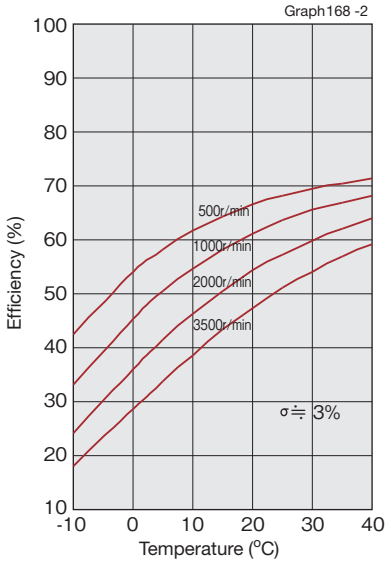

Model 17 to 50/ Reduction ratio 50

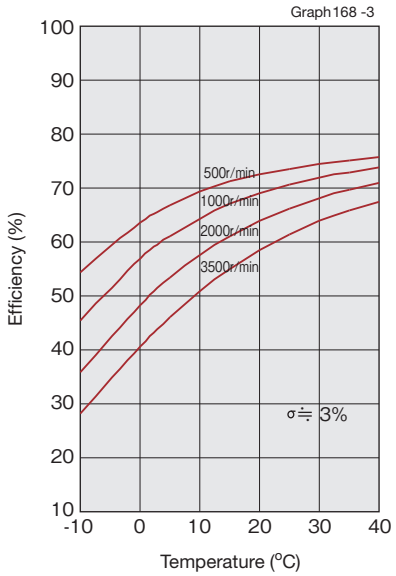

Model 17 to 50/ Reduction ratio 80, 100, 120

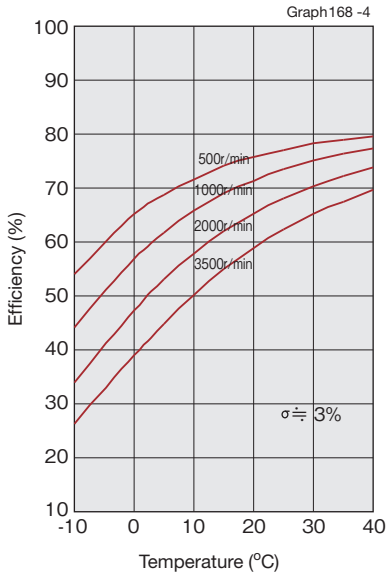

Model 20 to 50/ Reduction ratio 160

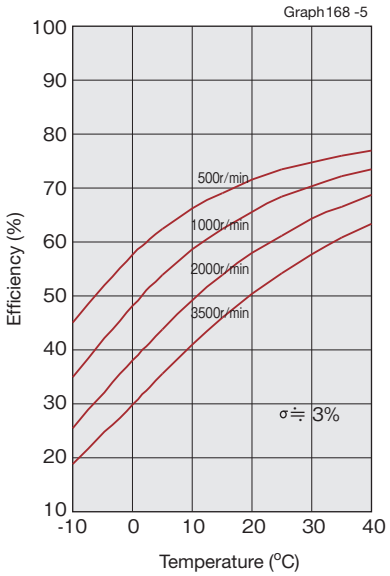

*The values in this graph are average values ($\overline{X}$). $\sigma \fallingdotseq \overline{X} \times 0.2$

CSD-2UF

Model 14/ Reduction ratio 50

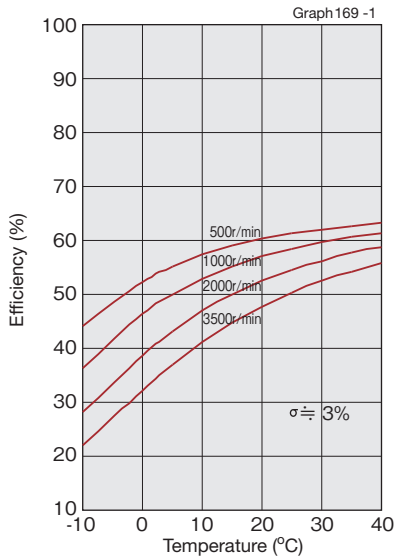

Model 14/ Reduction ratio 80, 100, 120

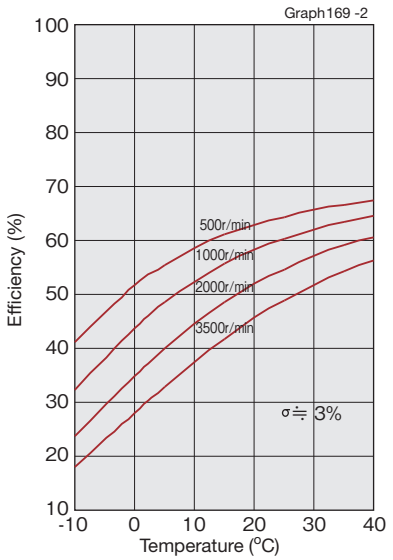

Model 17 to 40/ Reduction ratio 50

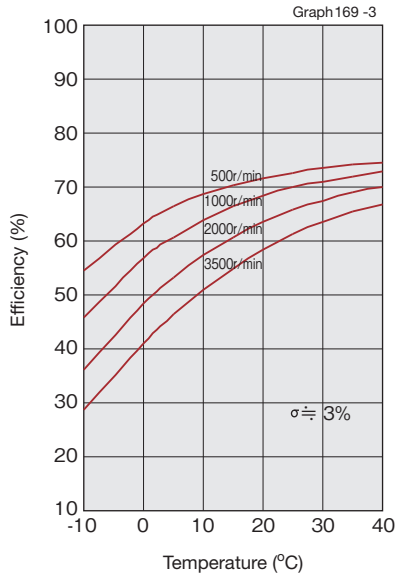

Model 17 to 40/ Reduction ratio 80, 100, 120

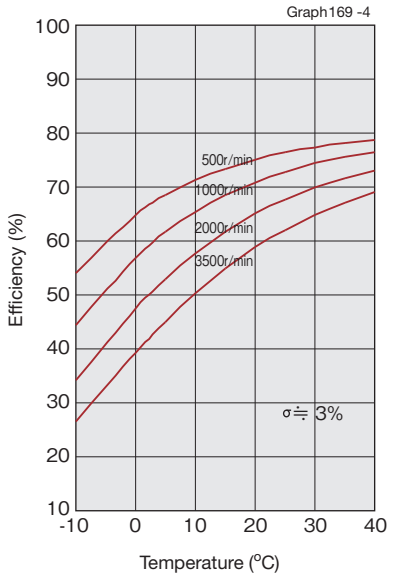

Model 20 to 40/ Reduction ratio 160

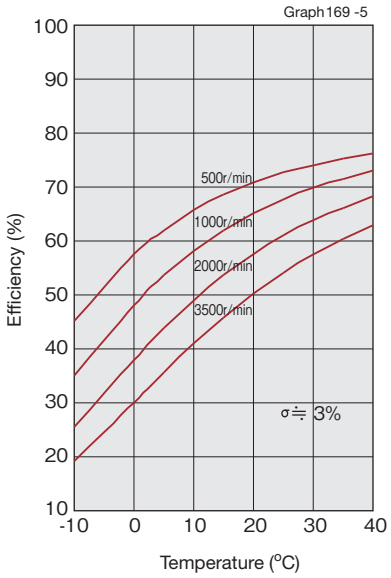

*The values in this graph are average values ($\bar{X}$). $\sigma \fallingdotseq \bar{X} \times 0.2$

Specification of the main roller bearing

A precision cross roller bearing is built in the unit type to directly support the external load (output flange).
Check the maximum load moment load, life of the bearing and static safety coefficient to fully bring out the performance of the unit type.
See the Page 030 to 034 of “Engineering data” for each calculation formula.

■Checking procedure

(1) Checking the maximum load moment load (Mmax)

Obtain the maximum load moment load (M*max*). → Maximum load moment load (M*max*) ≦ permissible moment (Mc)

(2) Checking the life

Obtain the average radial load (Fr*av*) and the average axial load (Fa*av*). → Obtain the radial load coefficient (x) and the axial load coefficient (y). → Calculate the life and check it.

(3) Checking the static safety coefficient

Obtain the static equivalent radial load coefficient (Po). → Check the static safety coefficient. (fs)

■Main roller bearing specifications

The specifications of the cross roller bearing are shown in Table 170-1 and -2.

■CSD-2UH

Table 170-1

Model	Pitch circle dia. of a roller	Offset amount	Basic rated load				Permissible moment load Mc		Moment rigidity Km		Permissible axial load Fa	Permissible radial load Fr
	dp	R	Basic dynamic rated load C		Basic static rated load Co		N·m	kgf·m	$\times10^4$ N·m/rad	kgf·m /arc-min		
	m	m	$\times10^2$N	kgf	$\times10^2$N	kgf					$\times10^2$N	$\times10^2$N
14	0.035	0.0095	47	480	60.7	620	41	4.2	4.38	1.3	10.1	6.74
17	0.0425	0.0099	52.9	540	75.5	770	64	6.5	7.75	2.3	11.3	7.58
20	0.050	0.0102	57.8	590	90	920	91	9.3	12.8	3.8	12.4	8.28
25	0.062	0.0130	96.0	980	151	1540	156	16	24.2	7.2	20.5	13.8
32	0.080	0.0144	150	1530	250	2550	313	32	53.9	16	32.1	21.5
40	0.096	0.0151	213	2170	365	3720	450	46	91	27	45.6	30.5
50	0.119	0.0192	348	3550	602	6140	759	77	171	51	74.4	49.9

■CSD-2UF

Table 170-2

Model	Pitch circle dia. of a roller	Offset amount	Basic rated load				Permissible moment load Mc		Moment rigidity Km		Permissible axial load Fa	Permissible radial load Fr
	dp	R	Basic dynamic rated load C		Basic static rated load Co		N·m	kgf·m	$\times10^4$ N·m/rad	kgf·m /arc-min		
	m	m	$\times10^2$N	kgf	$\times10^2$N	kgf					$\times10^2$N	$\times10^2$N
14	0.050	0.0118	57.8	590	90	920	91	9.3	12.8	3.8	12.4	8.28
17	0.060	0.0123	104	1060	163	1670	124	12.6	15.4	4.6	22.2	14.9
20	0.070	0.0128	146	1490	220	2250	187	19.1	25.2	7.5	31.2	20.9
25	0.085	0.0140	218	2230	358	3660	258	26.3	39.2	11.6	46.6	31.2
32	0.111	0.0168	382	3900	654	6680	580	59.1	100	29.6	81.7	54.7
40	0.133	0.0215	433	4410	816	8330	849	86.6	179	53.2	92.6	62.0

* The basic dynamic rated load means a certain static radial load so that the basic dynamic rated life of the roller bearing is one million rotations.
* The basic static rated load means a static load that gives a certain level of contact stress (4 kN/mm^2) in the center of the contact area between the rolling element receiving the maximum load and the orbit.
* Permissible moment load means the maximum moment load that may be applied to the output shaft. Within this range, the basic performance is secured and the operation can be performed.
* The value of the moment rigidity is the reference value. The lower-limit value is approximately 80% of the displayed value.
* Permissible axial load or permissible radial load is the value that satisfies the reducer life when either a genuine radial load or an axial load is applied to the main shaft. (When radial load is Lr+R=0mm, and axial load is La=0mm)

Mechanical precision

The mechanical precision of the unit type is shown below.

Input: Wave generator
Output: Circular spline
Fixed: Flexspline

CSD-2UH

Fig. 171-1

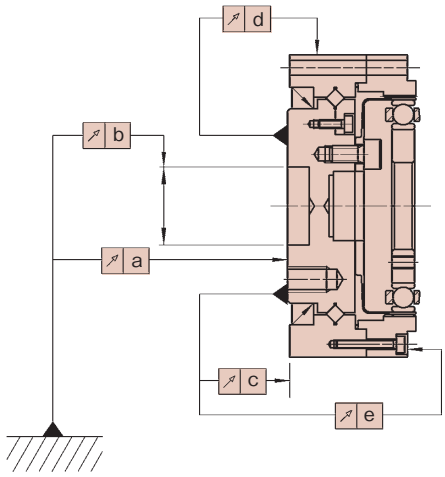

Table 171-1
Unit: mm

Symbol \ Model	14	17	20	25	32	40	50
a	0.010	0.010	0.010	0.015	0.015	0.015	0.018
b	0.010	0.012	0.012	0.013	0.013	0.015	0.015
c	0.007	0.007	0.007	0.007	0.007	0.007	0.007
d	0.010	0.010	0.010	0.010	0.010	0.015	0.015
e	0.025	0.025	0.025	0.035	0.037	0.037	0.040

CSD-2UF

Fig. 171-2

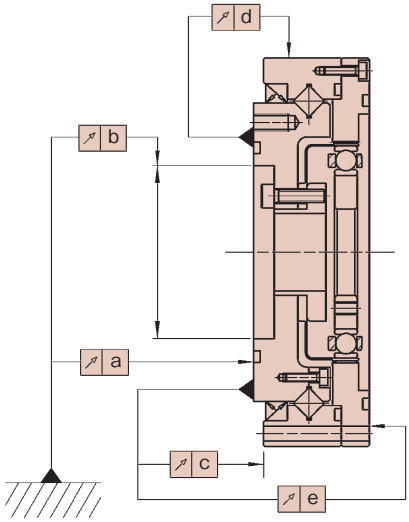

Table 171-2
Unit: mm

Symbol \ Model	14	17	20	25	32	40
a	0.010	0.010	0.010	0.015	0.015	0.015
b	0.010	0.010	0.010	0.010	0.013	0.013
c	0.010	0.010	0.010	0.010	0.013	0.013
d	0.010	0.010	0.010	0.010	0.013	0.013
e	0.031	0.031	0.031	0.041	0.047	0.047

Installation precision

Unreasonable and abnormal installation that may deform the mounting surface may lower the performance depending on the installation design. To take full advantage of HarmonicDrive®'s superior performance, pay attention to the following points and maintain the recommended precision of the installation cases shown in Table 172-1 and Figure 172-1 and -2 to make a design assuring no oil leakage.

- Warp and deformation on the mounting surface
- Blocking of foreign matter
- Problems caused by burrs, embossment and location around the tap area of the mounting hole
- Insufficient chamfering on the mounting faucet joint
- Insufficient roundness on the mounting faucet joint

Recommended precision for the built-in case

Fig. 172-1

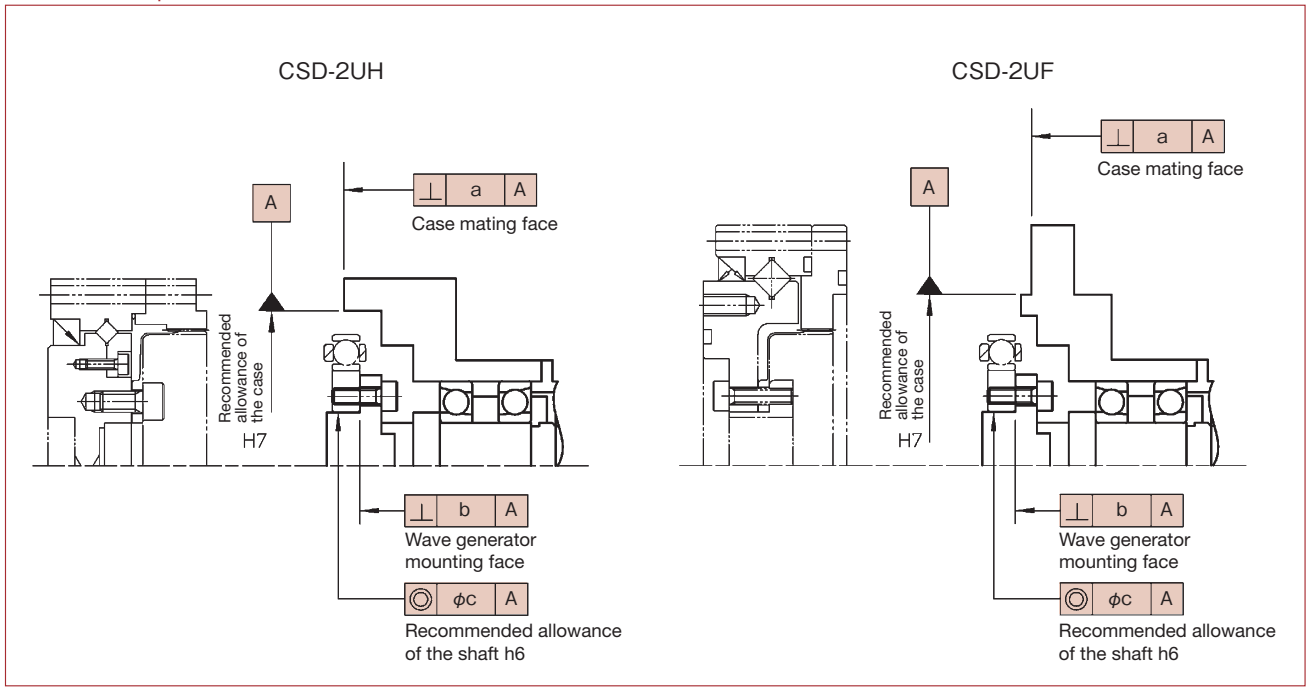

Recommended precision for the built-in case of CSD-2UH

Table 172-1
Unit: mm

Symbol \ Model	14	17	20	25	32	40	50
a	0.011	0.015	0.017	0.024	0.026	0.026	0.028
b	0.008	0.010	0.012	0.012	0.012	0.012	0.015
ϕc	0.016	0.018	0.019	0.022	0.022	0.024	0.030

Recommended precision for the built-in case of CSD-2UF

Table 172-2
Unit: mm

Symbol \ Model	14	17	20	25	32	40
a	0.011	0.015	0.017	0.024	0.026	0.026
b	0.008	0.010	0.012	0.012	0.012	0.012
ϕc	0.016	0.018	0.019	0.022	0.022	0.024

Installation and transmission torque

Fig. 173-1

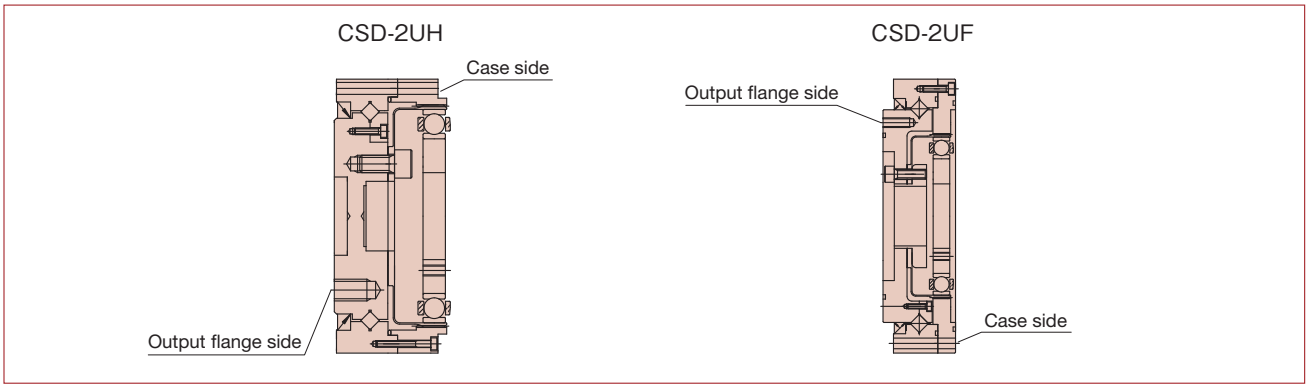

■Installation of output flange side with transmission torque

■CSD-2UH

Table 173-1

Item \ Model		14	17	20	25	32	40	50
Number of bolts		10	8	8	8	10	10	10
Bolt size		M3	M5	M6	M8	M8	M10	M12
Installation of bolts: P.C.D.	mm	25	27	34	42	57	72	88
Bolt tightening torque	N·m	2.0	9.0	15.3	37	37	74	128
	kgf·m	0.20	0.92	1.56	3.8	3.8	7.5	13.1
Bolt transmission torque	N·m	52	121	216	485	823	1660	2930
	kgf·m	5.3	12.4	22.1	49.5	84.0	169	298

■CSD-2UF

Table 173-2

Item \ Model		14	17	20	25	32	40
Number of bolts		8	10	8	8	8	12
Bolt size		M3	M3	M4	M5	M6	M6
Installation of bolts: P.C.D.	mm	42	50	60	73	96	116
Bolt tightening torque	N·m	2.0	2.0	4.5	9.0	15.3	15.3
	kgf·m	0.20	0.20	0.46	0.9	1.56	1.56
Bolt transmission torque	N·m	70	104	168	328	612	1100
	kgf·m	7.1	10.6	17.2	33.5	62.4	112

■Installation of case side with transmission torque

■CSD-2UH

Table 173-3

Item \ Model		14	17	20	25	32	40	50
Number of bolts		6	10	12	18	18	18	22
Bolt size		M3	M3	M3	M3	M4	M5	M6
Installation of bolts: P.C.D.	mm	49	56	64	79	104	117.5	147
Bolt tightening torque	N·m	2.0	2.0	2.0	2.0	4.5	9.0	15.3
	kgf·m	0.20	0.20	0.20	0.20	0.46	0.9	1.56
Bolt transmission torque	N·m	61	116	160	296	658	1180	2570
	kgf·m	6.2	11.9	16.3	30.0	67.0	121	262

■CSD-2UF

Table 173-4

Item \ Model		14	17	20	25	32	40
Number of bolts		6	8	8	10	10	10
Bolt size		M3	M3	M3	M4	M5	M6
Installation of bolts: P.C.D.	mm	64	74	84	102	132	158
Bolt tightening torque	N·m	2.0	2.0	2.0	4.5	9.0	15.3
	kgf·m	0.20	0.20	0.20	0.46	0.9	1.56
Bolt transmission torque	N·m	80	123	140	358	742	1250
	kgf·m	8.2	12.6	14.3	36.6	75.7	127

(Table 173-1 to 173-4/Notes)

1. It is assumed that the material of the female screws can endure the bolt tightening torque.
2. Recommended bolt　Bolt name: JIS B 1176 hexagonal bolt　Intensity type: JIS B 1051 12.9 or more
3. Torque efficiency: K=0.2
4. Tightening efficiency: A=1.4
5. Tightening friction coefficient μ=0.15

Lubrication

Grease lubrication is standard for the unit type that is delivered with grease sealed. As products are greased and shipped, additional application of grease during assembly is not necessary.

The distance between the main unit and the inner wall of the mounting flange should be as short as possible so that grease does not fly and remains inside the unit during operation. Contact us if you cannot secure the recommended size.

Fig. 174-1

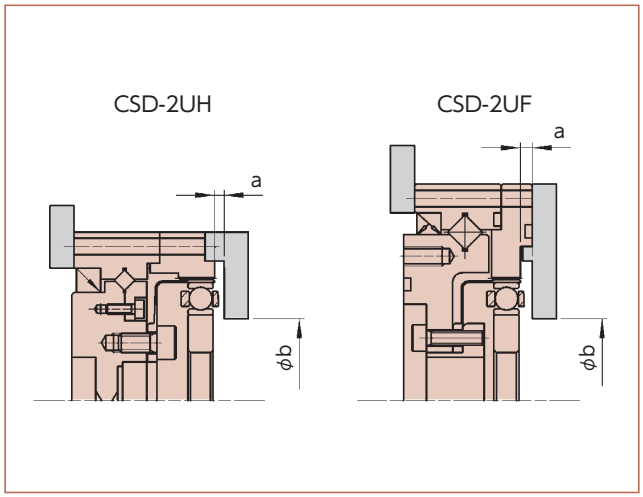

Table 174-1
Unit: mm

Symbol \ Model	14	17	20	25	32	40	50
a*	1	1	1.5	1.5	2	2.5	3.5
a**	3	3	4.5	4.5	6	7.5	10.5
$\phi b^{+0.5}_{0}$	16	26	30	37	37	45	45

* For the wave generator facing downward
** For the wave generator facing upward

■Other precautions

When you use the wave generator facing upward or downward (see Fig. 048-3 in page 048), fill the space between the wave generator and input cover (gap with the motor flange) with grease.

■Compatible grease by model

Compatible grease varies depending on the model number and reduction ratio. See the following compatibility table. We recommend SK-1A and SK-2 for general use.
See “Engineering data” on Page 016 for details for grease.

Compatible grease

Table 174-2

Model	14	17	20	25	32	40	50
SK-1A	—	—	○	○	○	○	○
SK-2	○	○	△	△	△	△	△
4BNo.2	□	□	□	□	□	□	□

○ mark: Standard grease
△ mark: Semi-standard grease
□ mark: Recommended grease for long life and high load

Sealing mechanism

The following sealing mechanism is required to prevent grease leakage and maintain the high durability of HarmonicDrive®.

- Rotating and sliding area ····· Oil seal (with a spring). Take care regarding flaws on the shaft.
- Flange mating face and mating ···· O-ring and seal agent. Take care regarding the distortion on the plane and how the O-ring is engaged.
- Screw hole area ····· Use a screw lock agent (Locktite 242 is recommended) or seal tape.

(Note) Observe the description above for the particular use of Harmonic grease® 4B No.2.

Sealing area and the recommended sealing method for the unit type

Table 174-3

Area requiring sealing		Recommended sealing method
Output side	Pass-through hole in the center of the output flange and the output flange mating face	Use O-ring (attached to our product)
	Mounting screw area	Screw lock agent with sealing effect (Locktite 242 is recommended)
Input side	Flange mating face	Use O-ring (attached to our product)
	Motor output shaft	Select one with an oil seal. Those without an oil seal should be structured so that an oil seal is attached to the motor mounting flange.

Application

Bending and twisting drive of the wrist for a vertical multijoint type robot

Fig. 175-1

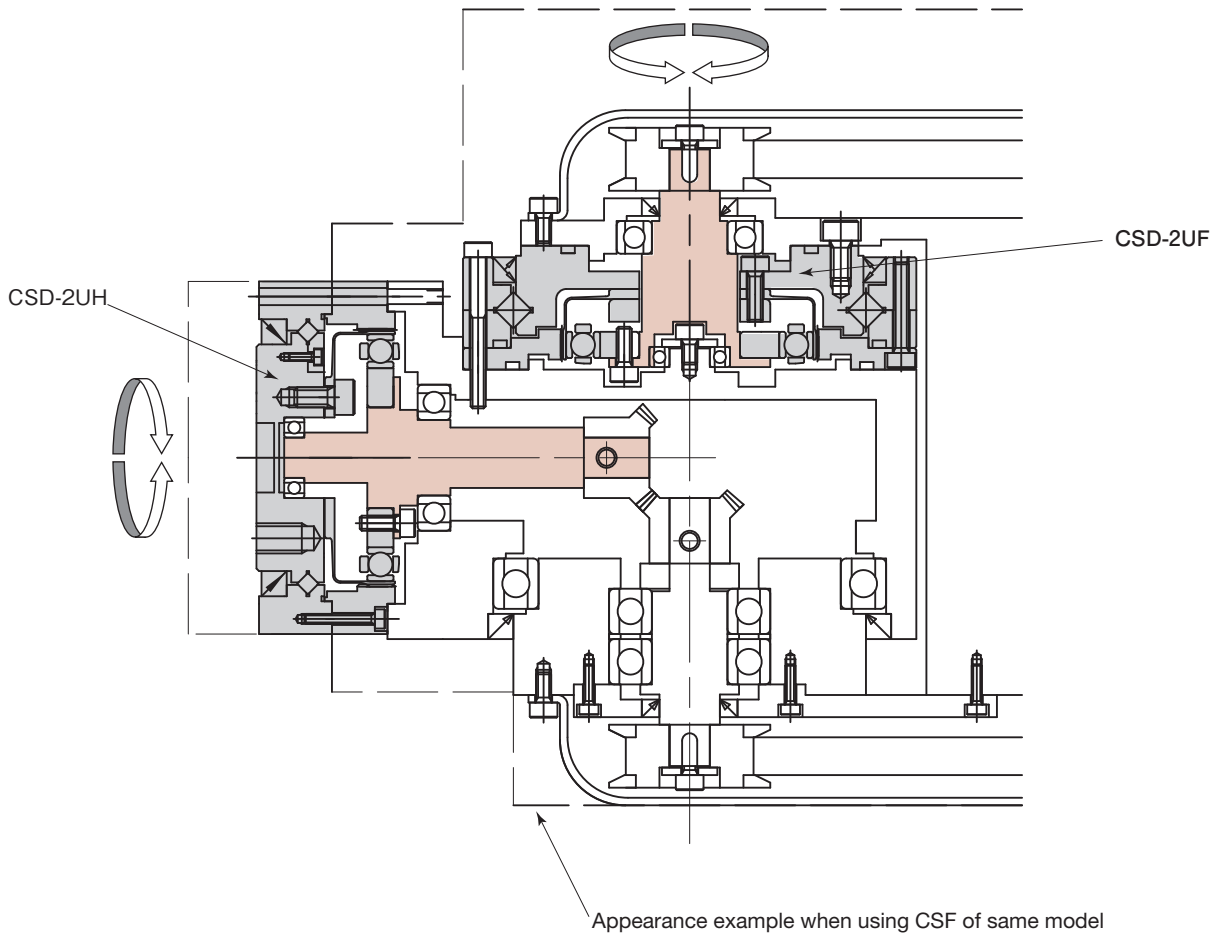

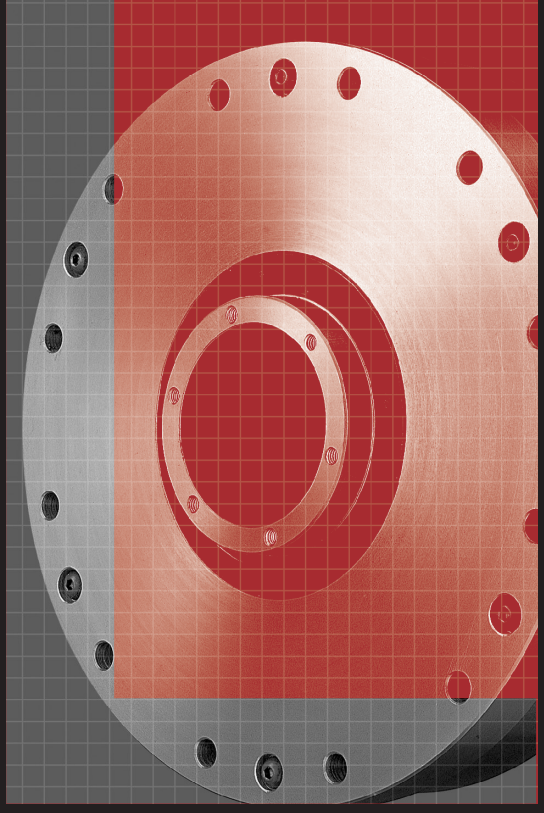

SHG/SHF Series

Unit Type SHG/SHF

Features

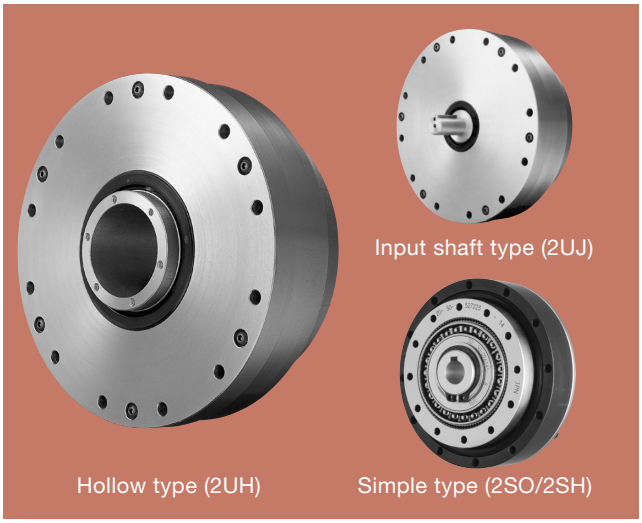

■SHG/SHF series unit type

The SHG/SHF series unit type is a unitized product based on the component type for easy handling. An accurate, highly rigid cross roller bearing is built in to directly support (main roller bearing) the external load.

Features of SHG/SHF series

- ■Large bore with hollow hole, flat shape
- ■Compact and simple design
- ■High torque capacity
- ■High stiffness
- ■Non-backlash
- ■High positioning and rotational accuracies
- ■Coaxial input and output

Shape variation

The SHG/SHF series unit type includes four shape variations allowing customers to select a shape best suited to their design needs for the machine and equipment.

- ■Large-diameter hollow hole structure: Hollow type (2UH)
- ■Various input pattern support: Input shaft type (2UJ)
- ■Easier to use: Standard simple type (2SO)
  Hollow simple type (2SH)

New variations

SHG series: for high torque
- Torque capacity has been improved by 30% compared to the SHF series.
- The life has been improved by 43% (10,000 hours) compared to the SHF series.

Reduction ratio of 30: for high-speed
- A reduction ratio of 30 has been achieved, keeping the merits of non-backlash HarmonicDrive®.

SHG/SHF-LW series: Light weight type
- New shape design and new lightweight materials contribute to weight reduction by about 20%.
- Same level of rating torque and performance as conventional products
- Speeding up and enhancing weight capacity of robot

Structure of the SHG/SHF series unit type

Fig. 178-1

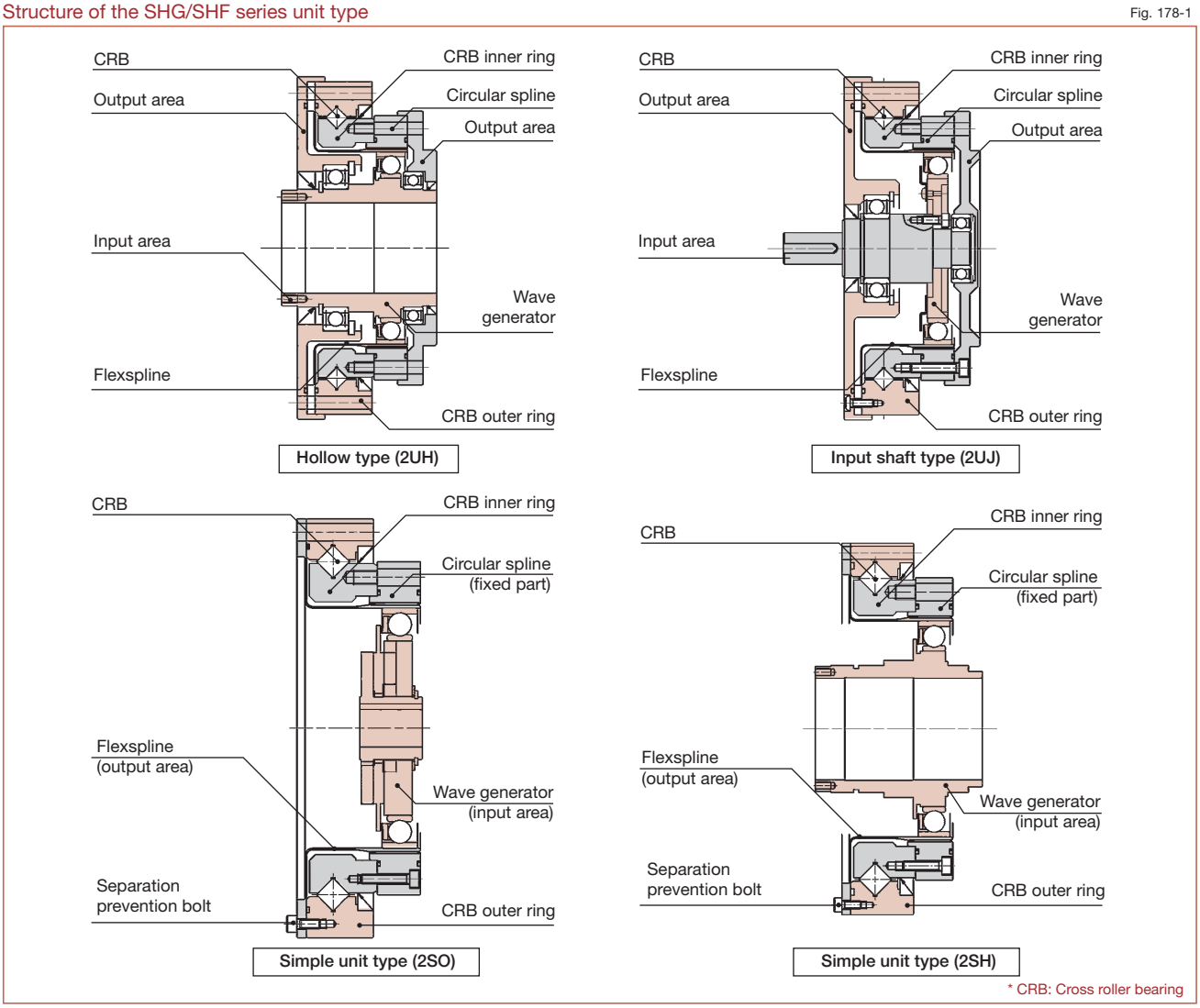

* CRB: Cross roller bearing

Comparison between SHG/SHF series and CSF series

Graph 179-1

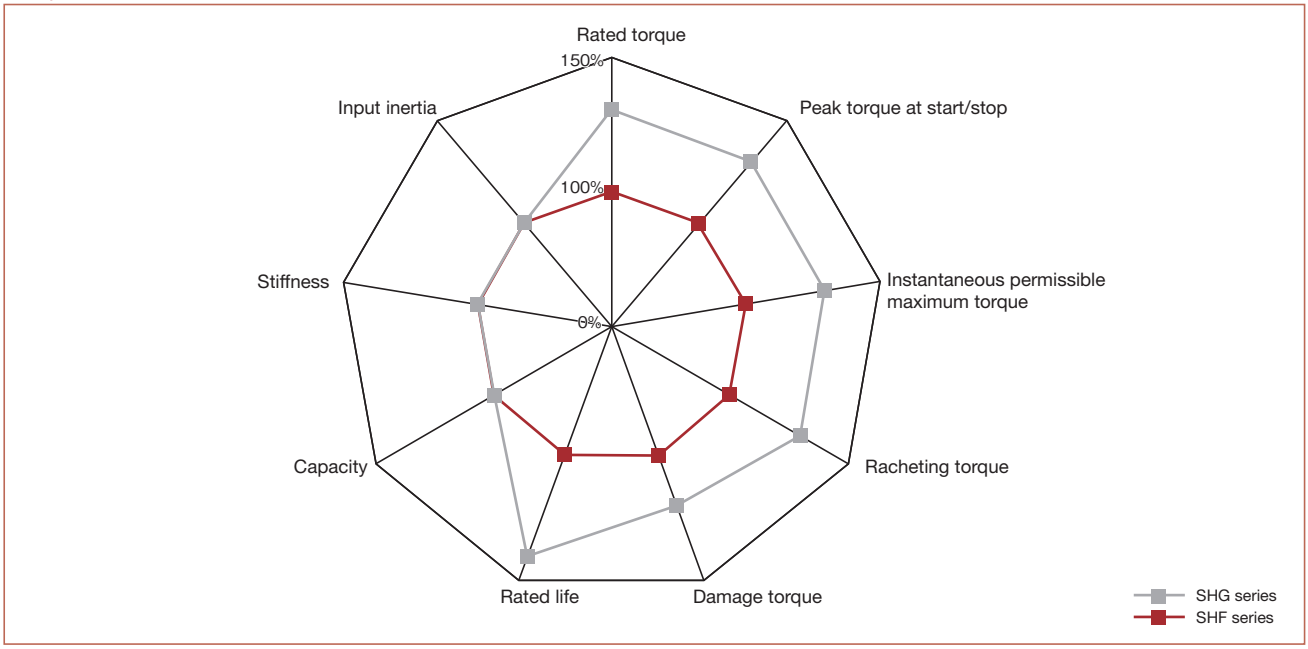

Model and Symbol

SHG - 25 - 100 - 2UH - SP1

Table 179-1

Model name	Model No.	Reduction ratio*					Model	Special specification
SHG	14	50	80	100	—	—	2A-GR= Component type(2A-R for Model No. 14, 17) 2UH= Hollow unit type 2UJ= Input shaft unit type 2SO= Simple unit type(Std. structure type) 2SH= Simple unit type(Hollow structure type)	LW= Light weight type SP= Special specifications such as shapes and performance None= Standard product
	17	50	80	100	120	—		
	20	50	80	100	120	160		
	25	50	80	100	120	160		
	32	50	80	100	120	160		
	40	50	80	100	120	160		
	45	50	80	100	120	160		
	50	—	80	100	120	160		
	58	—	80	100	120	160		
	65	—	80	100	120	160		

* The reduction ratio indicates the value for the following condition. Input: wave generator, fixed: circular spline, output: flexspline

SHF - 25 - 100 - 2UH - SP1

Table 179-2

Model name	Model No.	Reduction ratio*						Model	Special specification
SHF	11	—	50	—	100	—	—	2A-GR= Component type(2A-R for Model No. 14, 17) 2UH= Hollow unit type 2UJ= Input shaft unit type 2SO= Simple unit type(Std. structure type) 2SH= Simple unit type(Hollow structure type)	LW= Light weight type SP= Special specifications such as shapes and performance None= Standard product
	14	30	50	80	100	—	—		
	17	30	50	80	100	120	—		
	20	30	50	80	100	120	160		
	25	30	50	80	100	120	160		
	32	30	50	80	100	120	160		
	40	—	50	80	100	120	160		
	45	—	50	80	100	120	160		
	50	—	50	80	100	120	160		
	58	—	50	80	100	120	160		

(Note) 1. The reduction ratio indicates the value for the following condition. Input: wave generator, fixed: circular spline, output: flexspline
2. Only 2UH is available for model 11.

Technical Data

Rating table

SHG Series

Table 180-1

Model	Reduction ratio	Rated torque at input 2000r/min		Permissible peak torque at start/stop		Permissible max. value of ave. load torque		Instantaneous permissible max. torque		Permissible max. input rotational speed (r/min)	Permissible ave. input rotational speed (r/min)
		N·m	kgf·m	N·m	kgf·m	N·m	kgf·m	N·m	kgf·m	Grease lubricant	Grease lubricant
14	50	7.0	0.7	23	2.3	9	0.9	46	4.7	8500	3500
	80	10	1.0	30	3.1	14	1.4	61	6.2		
	100	10	1.0	36	3.7	14	1.4	70	7.2		
17	50	21	2.1	44	4.5	34	3.4	91	9	7300	3500
	80	29	2.9	56	5.7	35	3.6	113	12		
	100	31	3.2	70	7.2	51	5.2	143	15		
	120	31	3.2	70	7.2	51	5.2	112	11		
20	50	33	3.3	73	7.4	44	4.5	127	13	6500	3500
	80	44	4.5	96	9.8	61	6.2	165	17		
	100	52	5.3	107	10.9	64	6.5	191	20		
	120	52	5.3	113	11.5	64	6.5	191	20		
	160	52	5.3	120	12.2	64	6.5	191	20		
25	50	51	5.2	127	13	72	7.3	242	25	5600	3500
	80	82	8.4	178	18	113	12	332	34		
	100	87	8.9	204	21	140	14	369	38		
	120	87	8.9	217	22	140	14	395	40		
	160	87	8.9	229	23	140	14	408	42		
32	50	99	10	281	29	140	14	497	51	4800	3500
	80	153	16	395	40	217	22	738	75		
	100	178	18	433	44	281	29	841	86		
	120	178	18	459	47	281	29	892	91		
	160	178	18	484	49	281	29	892	91		
40	50	178	18	523	53	255	26	892	91	4000	3000
	80	268	27	675	69	369	38	1270	130		
	100	345	35	738	75	484	49	1400	143		
	120	382	39	802	82	586	60	1530	156		
	160	382	39	841	86	586	60	1530	156		
45	50	229	23	650	66	345	35	1235	126	3800	3000
	80	407	41	918	94	507	52	1651	168		
	100	459	47	982	100	650	66	2041	208		
	120	523	53	1070	109	806	82	2288	233		
	160	523	53	1147	117	819	84	2483	253		
50	80	484	49	1223	125	675	69	2418	247	3500	2500
	100	611	62	1274	130	866	88	2678	273		
	120	688	70	1404	143	1057	108	2678	273		
	160	688	70	1534	156	1096	112	3185	325		
58	80	714	73	1924	196	1001	102	3185	325	3000	2200
	100	905	92	2067	211	1378	141	4134	422		
	120	969	99	2236	228	1547	158	4329	441		
	160	969	99	2392	244	1573	160	4459	455		
65	80	969	99	2743	280	1352	138	4836	493	2800	1900
	100	1236	126	2990	305	1976	202	6175	630		
	120	1236	126	3263	333	2041	208	6175	630		
	160	1236	126	3419	349	2041	208	6175	630		

(Note) 1. Inertia moment: $I=\frac{1}{4}GD^2$
2. See "Engineering data" on Page 012 for details of the terms.

SHF Series

Table 181-1

Model	Reduction ratio	Rated torque at input 2000r/min		Permissible peak torque at start/stop		Permissible max. value of ave. load torque		Instantaneous permissible max. torque		Permissible max. input rotational speed (r/min)	Permissible ave. input rotational speed (r/min)
		N·m	kgf·m	N·m	kgf·m	N·m	kgf·m	N·m	kgf·m	Grease lubricant	Grease lubricant
11	50	3.5	0.36	8.3	0.85	5.5	0.56	17	1.73	8500	3500
	100	5	0.51	11	1.12	8.9	0.91	25	2.55		
14	30	4.0	0.41	9.0	0.92	6.8	0.69	17	1.7	8500	3500
	50	5.4	0.55	18	1.8	6.9	0.70	35	3.6		
	80	7.8	0.80	23	2.4	11	1.1	47	4.8		
	100	7.8	0.80	28	2.9	11	1.1	54	5.5		
17	30	8.8	0.90	16	1.6	12	1.2	30	3.1	7300	3500
	50	16	1.6	34	3.5	26	2.6	70	7.1		
	80	22	2.2	43	4.4	27	2.7	87	8.9		
	100	24	2.4	54	5.5	39	4.0	110	11		
	120	24	2.4	54	5.5	39	4.0	86	8.8		
20	30	15	1.5	27	2.8	20	2.0	50	5.1	6500	3500
	50	25	2.5	56	5.7	34	3.5	98	10		
	80	34	3.5	74	7.5	47	4.8	127	13		
	100	40	4.1	82	8.4	49	5.0	147	15		
	120	40	4.1	87	8.9	49	5.0	147	15		
	160	40	4.1	92	9.4	49	5.0	147	15		
25	30	27	2.8	50	5.1	38	3.9	95	9.7	5600	3500
	50	39	4.0	98	10	55	5.6	186	19		
	80	63	6.4	137	14	87	8.9	255	26		
	100	67	6.8	157	16	108	11	284	29		
	120	67	6.8	167	17	108	11	304	31		
	160	67	6.8	176	18	108	11	314	32		
32	30	54	5.5	100	10	75	7.7	200	20	4800	3500
	50	76	7.8	216	22	108	11	382	39		
	80	118	12	304	31	167	17	568	58		
	100	137	14	333	34	216	22	647	66		
	120	137	14	353	36	216	22	686	70		
	160	137	14	372	38	216	22	686	70		
40	50	137	14	402	41	196	20	686	70	4000	3000
	80	206	21	519	53	284	29	980	100		
	100	265	27	568	58	372	38	1080	110		
	120	294	30	617	63	451	46	1180	120		
	160	294	30	647	66	451	46	1180	120		
45	50	176	18	500	51	265	27	950	97	3800	3000
	80	313	32	706	72	390	40	1270	130		
	100	353	36	755	77	500	51	1570	160		
	120	402	41	823	84	620	63	1760	180		
	160	402	41	882	90	630	64	1910	195		
50	50	122	12	715	73	175	18	1430	146	3500	2500
	80	372	38	941	96	519	53	1860	190		
	100	470	48	980	100	666	68	2060	210		
	120	529	54	1080	110	813	83	2060	210		
	160	529	54	1180	120	843	86	2450	250		
58	50	176	18	1020	104	260	27	1960	200	3000	2200
	80	549	56	1480	151	770	79	2450	250		
	100	696	71	1590	162	1060	108	3180	325		
	120	745	76	1720	176	1190	121	3330	340		
	160	745	76	1840	188	1210	123	3430	350		

(Note) 1. Inertia moment: $I=\frac{1}{4}GD^2$
2. See "Engineering data" on Page 012 for details of the terms.
3. Only 2UH is available for model 11.

Angle transmission accuracy

See "Engineering data" for a description of terms.

Table 182-1

Reduction ratio	Specification \ Model		11	14	17	20	25	32	40 or more
30	Standard product	$\times10^{-4}$rad	—	5.8	4.4	4.4	4.4	4.4	—
		arc-min	—	2	1.5	1.5	1.5	1.5	—
	Special product	$\times10^{-4}$rad	—	—	—	2.9	2.9	2.9	—
		arc-min	—	—	—	1	1	1	—
50 or more	Standard product	$\times10^{-4}$rad	5.8 (4.4)	4.4	4.4	2.9	2.9	2.9	2.9
		arc-min	2 (1.5)	1.5	1.5	1	1	1	1
	Special product	$\times10^{-4}$rad	—	2.9	2.9	1.5	1.5	1.5	1.5
		arc-min	—	1	1	0.5	0.5	0.5	0.5

(Note) The parenthesized value of model 11 indicates the value for reduction ratio 100.

Hysteresis loss

See "Engineering data" for a description of terms.

Table 182-2

Reduction ratio	Unit \ Model	11	14	17	20	25	32	40 or more
30	$\times10^{-4}$rad	—	8.7	8.7	8.7	8.7	8.7	—
	arc-min	—	3.0	3.0	3.0	3.0	3.0	—
50	$\times10^{-4}$rad	5.8	5.8	5.8	5.8	5.8	5.8	5.8
	arc-min	2.0	2.0	2.0	2.0	2.0	2.0	2.0
80 or more	$\times10^{-4}$rad	5.8	2.9	2.9	2.9	2.9	2.9	2.9
	arc-min	2.0	1.0	1.0	1.0	1.0	1.0	1.0

Max. backlash quantity

See "Engineering data" for a description of terms.

Table 182-3

Reduction ratio \ Model		11	14	17	20	25	32	40	45	50	58	65
30	$\times10^{-5}$rad	—	29.1	16.0	13.6	13.6	11.2	—	—	—	—	—
	arc-sec	—	60	33	28	28	23	—	—	—	—	—
50	$\times10^{-5}$rad	(Note)	17.5	9.7	8.2	8.2	6.8	6.8	5.8	5.8	4.8	—
	arc-sec	(Note)	36	20	17	17	14	14	12	12	10	—
80	$\times10^{-5}$rad	—	11.2	6.3	5.3	5.3	4.4	4.4	3.9	3.9	2.9	2.9
	arc-sec	—	23	13	11	11	9	9	8	8	6	6
100	$\times10^{-5}$rad	(Note)	8.7	4.8	4.4	4.4	3.4	3.4	2.9	2.9	2.4	2.4
	arc-sec	(Note)	18	10	9	9	7	7	6	6	5	5
120	$\times10^{-5}$rad	—	—	3.9	3.9	3.9	2.9	2.9	2.4	2.4	1.9	1.9
	arc-sec	—	—	8	8	8	6	6	5	5	4	4
160	$\times10^{-5}$rad	—	—	—	2.9	2.9	2.4	2.4	1.9	1.9	1.5	1.5
	arc-sec	—	—	—	6	6	5	5	4	4	3	3

(Note) For model number 11, the wave generator mechanism is the rigid type only. See "Engineering data" for details.

Rigidity (Spring constant)

See "Engineering data" for a description of terms.

Table 182-4

Symbol \ Model			11	14	17	20	25	32	40	45	50	58	65
T_1		N·m	0.8	2.0	3.9	7.0	14	29	54	76	108	168	235
		kgf·m	0.082	0.2	0.4	0.7	1.4	3.0	5.5	7.8	11	17	24
T_2		N·m	2.0	6.9	12	25	48	108	196	275	382	598	843
		kgf·m	0.2	0.7	1.2	2.5	4.9	11	20	28	39	61	86
Reduction ratio 30	K_1	$\times10^4$N·m/rad	—	0.19	0.34	0.57	1.0	2.4	—	—	—	—	—
		kgf·m/arc-min	—	0.056	0.10	0.17	0.30	0.70	—	—	—	—	—
	K_2	$\times10^4$N·m/rad	—	0.24	0.44	0.71	1.3	3.0	—	—	—	—	—
		kgf·m/arc-min	—	0.07	0.13	0.21	0.40	0.89	—	—	—	—	—
	K_3	$\times10^4$N·m/rad	—	0.34	0.67	1.1	2.1	4.9	—	—	—	—	—
		kgf·m/arc-min	—	0.10	0.20	0.32	0.62	1.5	—	—	—	—	—
	θ_1	$\times10^{-4}$rad	—	10.5	11.5	12.3	14	12.1	—	—	—	—	—
		arc-min	—	3.6	4.0	4.1	4.7	4.3	—	—	—	—	—
	θ_2	$\times10^{-4}$rad	—	31	30	38	40	38	—	—	—	—	—
		arc-min	—	10.7	10.2	12.7	13.4	13.3	—	—	—	—	—
Reduction ratio 50	K_1	$\times10^4$N·m/rad	0.22	0.34	0.81	1.3	2.5	5.4	10	15	20	31	—
		kgf·m/arc-min	0.066	0.1	0.24	0.38	0.74	1.6	3.0	4.3	5.9	9.3	—
	K_2	$\times10^4$N·m/rad	0.3	0.47	1.1	1.8	3.4	7.8	14	20	28	44	—
		kgf·m/arc-min	0.09	0.14	0.32	0.52	1.0	2.3	4.2	6.0	8.2	13	—
	K_3	$\times10^4$N·m/rad	0.32	0.57	1.3	2.3	4.4	9.8	18	26	34	54	—
		kgf·m/arc-min	0.096	0.17	0.4	0.67	1.3	2.9	5.3	7.6	10	16	—
	θ_1	$\times10^{-4}$rad	3.6	5.8	4.9	5.2	5.5	5.5	5.2	5.2	5.5	5.2	—
		arc-min	1.2	2.0	1.7	1.8	1.9	1.9	1.8	1.8	1.9	1.8	—
	θ_2	$\times10^{-4}$rad	8.0	16	12	15.4	15.7	15.7	15.4	15.1	15.4	15.1	—
		arc-min	2.6	5.6	4.2	5.3	5.4	5.4	5.3	5.2	5.3	5.2	—

* The values in this table are reference values. The lower-limit value is approximately 80% of the displayed value.

Table 183-1

Symbol \ Model			11	14	17	20	25	32	40	45	50	58	65
T_1		N·m	0.8	2.0	3.9	7.0	14	29	54	76	108	168	235
		kgf·m	0.82	0.2	0.4	0.7	1.4	3.0	5.5	7.8	11	17	24
T_2		N·m	2	6.9	12	25	48	108	196	275	382	598	843
		kgf·m	0.2	0.7	1.2	2.5	4.9	11	20	28	39	61	86
Reduction ratio 80 or more	K_1	$\times 10^4$N·m/rad	0.27	0.47	1	1.6	3.1	6.7	13	18	25	40	54
		kgf·m/arc-min	0.08	0.14	0.3	0.47	0.92	2.0	3.8	5.4	7.4	12	16
	K_2	$\times 10^4$N·m/rad	0.34	0.61	1.4	2.5	5.0	11	20	29	40	61	88
		kgf·m/arc-min	0.1	0.18	0.4	0.75	1.5	3.2	6.0	8.5	12	18	26
	K_3	$\times 10^4$N·m/rad	0.44	0.71	1.6	2.9	5.7	12	23	33	44	71	98
		kgf·m/arc-min	0.13	0.21	0.46	0.85	1.7	3.7	6.8	9.7	13	21	29
	θ_1	$\times 10^{-4}$rad	3	4.1	3.9	4.4	4.4	4.4	4.1	4.1	4.4	4.1	4.4
		arc-min	1	1.4	1.3	1.5	1.5	1.5	1.4	1.4	1.5	1.4	1.5
	θ_2	$\times 10^{-4}$rad	6	12	9.7	11.3	11.1	11.6	11.1	11.1	11.1	11.1	11.3
		arc-min	2.2	4.2	3.3	3.9	3.8	4.0	3.8	3.8	3.8	3.8	3.9

* The values in this table are reference values. The lower-limit value is approximately 80% of the displayed value.

Ratcheting torque

See "Engineering data" for a description of terms.

SHG Series

Table 183-2
Unit: N·m

Reduction ratio \ Model	14	17	20	25	32	40	45	50	58	65
50	110	190	280	580	1200	2300	3500	—	—	—
80	140	260	450	880	1800	3600	5000	7000	10000	14000
100	100	200	330	650	1300	2700	4000	5300	8300	12000
120	—	150	310	610	1200	2400	3600	4900	7500	10000
160	—	—	280	580	1200	2300	3300	4600	7200	10000

SHF Series

Table 183-3
Unit: N·m

Reduction ratio \ Model	11	14	17	20	25	32	40	45	50	58
30	—	59	100	170	340	720	—	—	—	—
50	34	88	150	220	450	980	1800	2700	3700	5800
80	—	110	200	350	680	1400	2800	3900	5400	8200
100	43	84	160	260	500	1000	2100	3100	4100	6400
120	—	—	120	240	470	980	1900	2800	3800	5800
160	—	—	—	220	450	980	1800	2600	3600	5600

Buckling torque

See "Engineering data" for a description of terms.

SHG Series

Table 183-4
Unit: N·m

Model	14	17	20	25	32	40	45	50	58	65
All Ratios	180	350	590	1100	2400	4400	6300	8600	13400	18800

SHF Series

Table 183-5
Unit: N·m

Model	11	14	17	20	25	32	40	45	50	58
All Ratios	90	140	270	440	890	1750	3750	5400	7500	11800

Specification of the main roller bearing

A precision cross roller bearing is built in the unit type to directly support the external load (output flange).
Check the maximum load moment load, life of the bearing and static safety coefficient to fully bring out the performance of the unit type.

See the Pages 030 to 034 of “Engineering data” for each calculation formula.

■Checking procedure

(1) Checking the maximum load moment load (M*max*)

Obtain the maximum load moment load (M*max*). → Maximum load moment load (M*max*) ≦ permissible moment (Mc)

(2) Checking the life

Obtain the average radial load (Fr*av*) and the average axial load (Fa*av*). → Obtain the radial load coefficient (x) and the axial load coefficient (y). → Calculate the life and check it.

(3) Checking the static safety coefficient

Obtain the static equivalent radial load coefficient (Po). → Check the static safety coefficient. (fs)

■Main roller bearing specifications

The specifications of the cross roller are shown in Table 184-1.

Specifications

Table 184-1

Model	Pitch circle dia. of a roller	Offset amount	Basic rated load				Permissible moment load Mc		Moment rigidity Km	
	dp	R	Basic dynamic rated load C		Basic static rated load Co					
	m	m	$\times10^2$N	kgf	$\times10^2$N	kgf	N·m	kgf·m	$\times10^4$N·m/rad	kgf·m/arc-min
11	0.043	0.018	52.9	540	75.5	770	74	7.6	6.5	1.8
14	0.050	0.0217	58	590	86	880	74	7.6	8.5	2.5
17	0.060	0.0239	104	1060	163	1670	124	12.6	15.4	4.6
20	0.070	0.0255	146	1490	220	2250	187	19.1	25.2	7.5
25	0.085	0.0296	218	2230	358	3660	258	26.3	39.2	11.6
32	0.111	0.0364	382	3900	654	6680	580	59.1	100	29.6
40	0.133	0.044	433	4410	816	8330	849	86.6	179	53.2
45	0.154	0.0475	776	7920	1350	13800	1127	115	257	76.3
50	0.170	0.0525	816	8330	1490	15300	1487	152	351	104
58	0.195	0.0622	874	8920	1710	17500	2180	222	531	158
65	0.218	0.072	1300	13300	2230	22700	2740	280	741	220

* The basic dynamic rated load means a certain static radial load so that the basic dynamic rated life of the roller bearing is a million rotations.
  The basic static rated load means a static load that gives a certain level of contact stress (4 kN/mm^2) in the center of the contact area between the rolling element receiving the maximum load and the orbit.
* Permissible moment load means the maximum moment load that may be applied to the output shaft. Within this range, the basic performance is secured and the operation can be performed.
* The value of the moment rigidity is the reference value. The lower-limit value is approximately 80% of the displayed value.
* Permissible axial load or permissible radial load is the value that satisfies the reducer life when either a genuine radial load or an axial load is applied to the main shaft.
  (When radial load is Lr+R=0mm, and axial load is La=0mm)

Mechanical precision

The mechanical precision of the unit type is shown below.

■Flexspline fixed

Input: Wave generator
Output: Circular spline
Fixed: Flexspline

Hollow type (2UH) Fig. 185-1

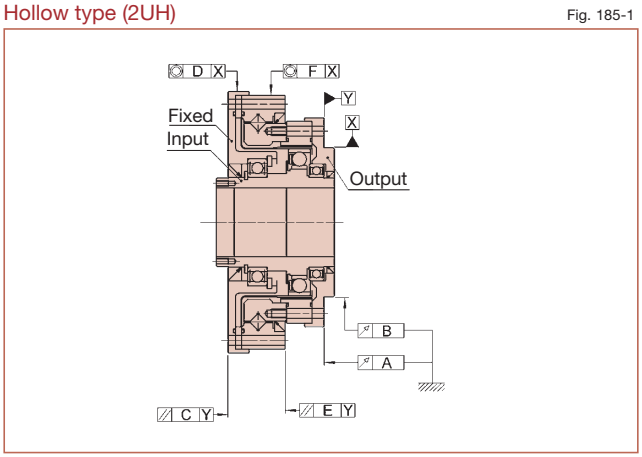

Input shaft type (2UJ) Fig. 185-2

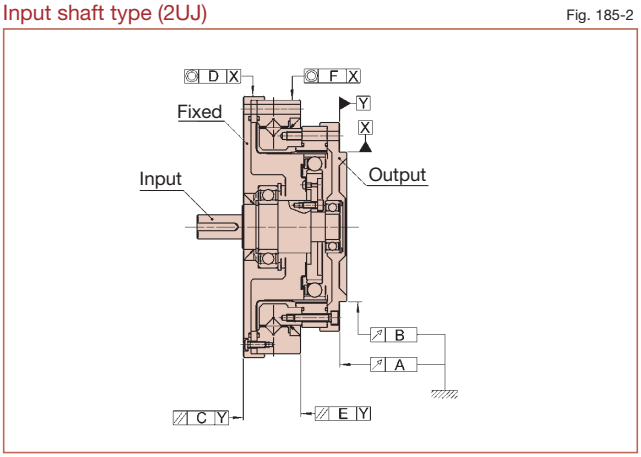

Table 185-1
Unit: mm

Model / Symbol	11	14	17	20	25	32	40	45	50	58	65
A	0.033	0.033	0.038	0.040	0.046	0.054	0.057	0.057	0.063	0.063	0.067
B	0.035	0.035	0.035	0.039	0.041	0.047	0.050	0.053	0.060	0.063	0.063
C	0.053	0.064	0.071	0.079	0.085	0.104	0.111	0.118	0.121	0.121	0.131
D	0.053	0.053	0.050	0.059	0.061	0.072	0.075	0.078	0.085	0.088	0.089
E	0.039	0.040	0.045	0.051	0.057	0.065	0.071	0.072	0.076	0.076	0.082
F	0.038	0.038	0.038	0.047	0.049	0.054	0.060	0.065	0.067	0.070	0.072

■Circular spline fixed

Input: Wave generator
Output: Flexspline
Fixed: Circular spline

Hollow type (2UH) Fig. 185-3

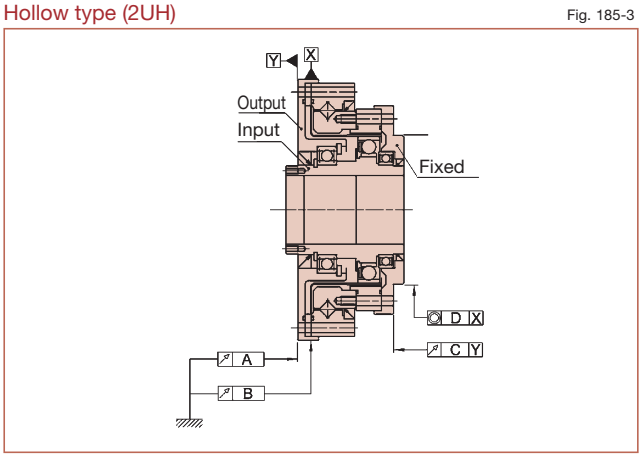

Input shaft type (2UJ) Fig. 185-4

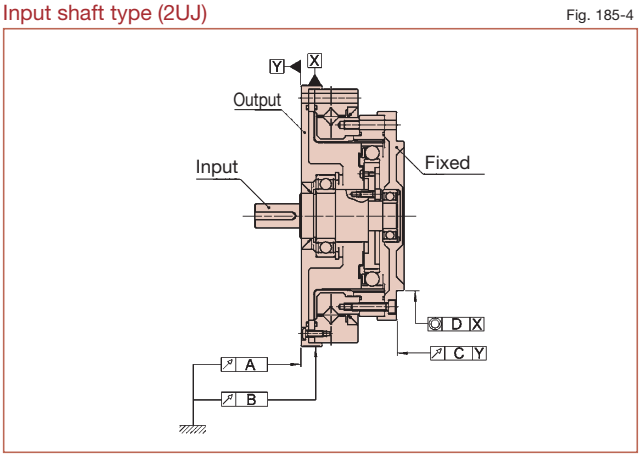

Table 185-2
Unit: mm

Model / Symbol	11	14	17	20	25	32	40	45	50	58	65
A	0.027	0.037	0.039	0.046	0.047	0.059	0.060	0.070	0.070	0.070	0.076
B	0.031	0.031	0.031	0.038	0.038	0.045	0.048	0.050	0.050	0.050	0.054
C	0.053	0.064	0.071	0.079	0.085	0.104	0.111	0.118	0.121	0.121	0.131
D	0.053	0.053	0.053	0.059	0.061	0.072	0.075	0.078	0.085	0.088	0.089

Rotational direction and reduction ratio of a unit type

The rotational direction and the reduction ratio vary depending on the flange to be fixed for the unit type. Call attention to it before installation.

■Flexspline fixed

Input: Wave generator
Output: Circular spline
Fixed: Flexspline

Output rotational direction:
Same rotational direction as the input

Reduction ratio(i): $i = \frac{1}{R+1}$

Hollow type (2UH) Fig. 186-1

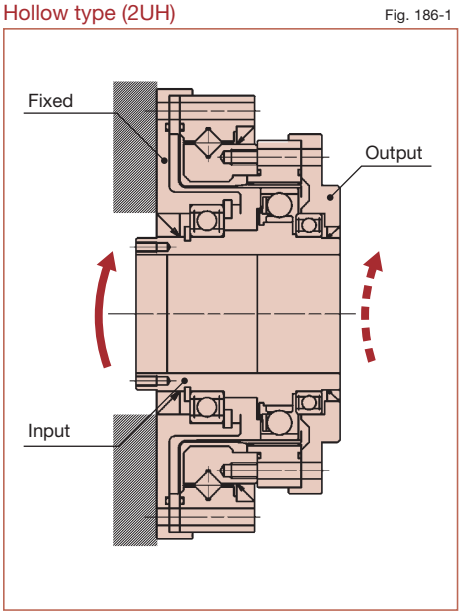

Input shaft type (2UJ) Fig. 186-2

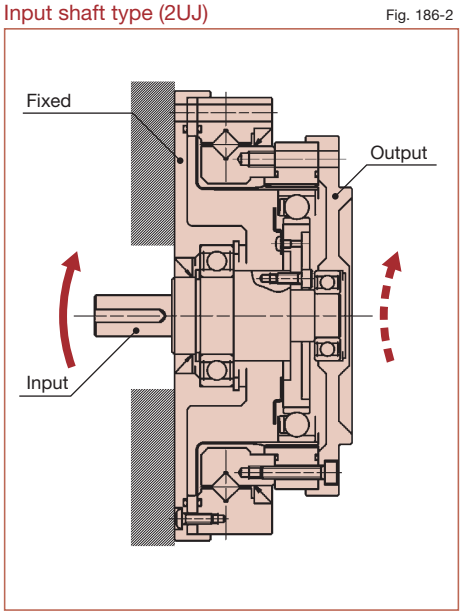

■Circular spline fixed

Input: Wave generator
Output: Flexspline
Fixed: Circular spline

Output rotational direction:
Opposite rotational direction to the input

Reduction ratio(i): $i = \frac{-1}{R}$

Hollow type (2UH) Fig. 186-1

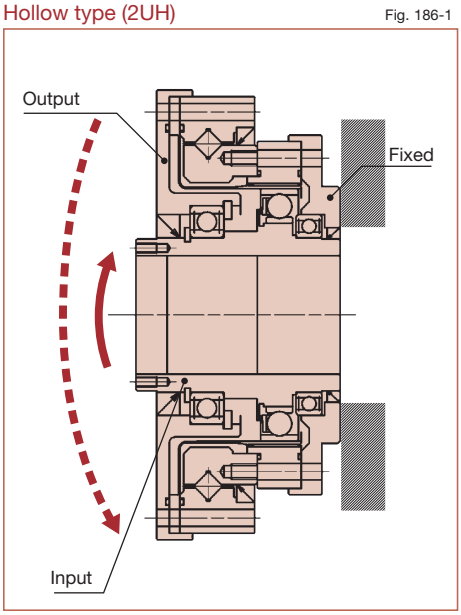

Input shaft type (2UJ) Fig. 186-2

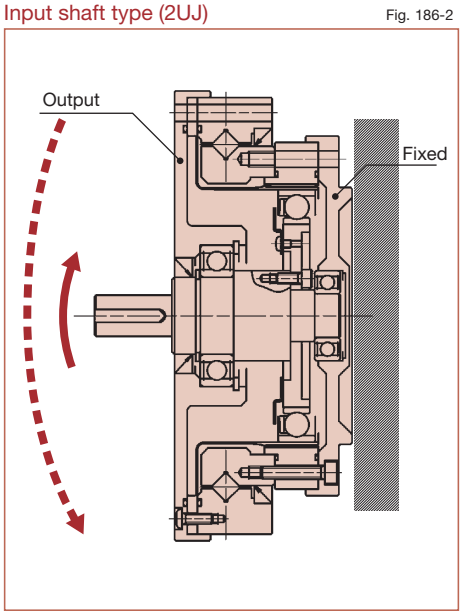

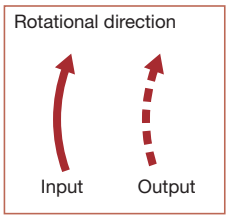

Design guide

Lubrication

The standard lubricant for the reducer of the unit type is Harmonic grease® SK-1A and SK-2 (Harmonic grease® 4B No.2 for the cross roller bearing). Harmonic grease® 4B No.2 is also available for the long-life type. The specifications of the grease are described on Page 016.

■Sealing mechanism

- Rotating and sliding area ····· Oil seal (with a spring). Take care regarding flaws on the shaft.
- Flange mating face and mating ···· O-ring and seal agent. Take care regarding the distortion on the plane and how the O-ring is engaged.
- Screw hole area ····· Use a screw lock agent (Locktite 242 is recommended) or seal tape.

(Note) Observe the description above for the particular use of Harmonic grease® 4B No.2.

On anti-rust provision

The surface of the unit type is not treated with anti-rust coating, except for the cross roller bearing. Apply anti-rust agent on the surface if required. Raydent processing has been applied to the surface of the cross roller bearing. Contact us if you would like us to perform anti-rust surface treatment.

Installation precautions

Unreasonable and abnormal installation that may deform the mounting surface may lower the performance depending on the installation design.
To take full advantage of the unit type's superior performance, pay attention to the following points.
In addition, perform the appropriate installation according to each series, because the torque capacity of SHG series is larger than SHF series.

- Warp and deformation on the mounting surface
- Blocking of foreign matter
- Problems caused by burrs, embossment and location around the tap area of the mounting hole
- Insufficient chamfering on the mounting faucet joint
- Insufficient roundness on the mounting faucet joint

Installation and transmission torque

Fig. 188-1

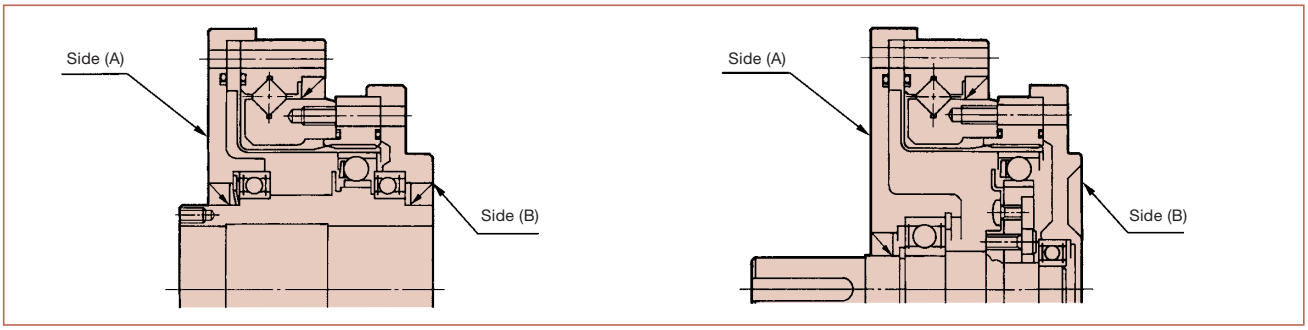

SHG series: Installation of side (A) and transmission torque

Table 188-1

Item \ Model		14	17	20	25	32	40	45	50	58	65
Number of bolts		8	12	12	12	12	12	18	12	16	16
Bolt size		M3	M3	M3	M4	M5	M6	M6	M8	M8	M10
Installation of bolts: P.C.D.	mm	64	74	84	102	132	158	180	200	226	258
Bolt tightening torque	N·m	2.4	2.4	2.4	5.4	10.8	18.4	18.4	44	44	74
	kgf·m	0.24	0.24	0.24	0.55	1.10	1.87	1.87	4.5	4.5	7.6
Bolt transmission torque	N·m	128	222	252	516	1069	1813	3098	4163	6272	9546
	kgf·m	13	23	26	53	109	185	316	425	640	974

SHF series: Installation of side (A) and transmission torque

Table 188-2

Item \ Model		11	14	17	20	25	32	40	45	50	58
Number of bolts		4	8	12	12	12	12	12	18	12	16
Bolt size		M3	M3	M3	M3	M4	M5	M6	M6	M8	M8
Installation of bolts: P.C.D.	mm	56.4	64	74	84	102	132	158	180	200	226
Bolt tightening torque	N·m	2	2.0	2.0	2.0	4.5	9.0	15.3	15.3	37	37
	kgf·m	2.0	0.20	0.20	0.20	0.46	0.92	1.56	1.56	3.8	3.8
Bolt transmission torque	N·m	47	108	186	206	431	892	1509	2578	3489	5263
	kgf·m	4.7	11	19	21	44	91	154	263	356	974

(Table 188-1, 188-2/Notes)
1. It is assumed that the material of the female screws can endure the bolt tightening torque.
2. Recommended bolt Bolt name: JIS B 1176 hexagonal bolt Intensity type: JIS B 1051 12.9 or more
3. Torque efficiency: K=0.2
4. Tightening efficiency: A=1.4
5. Tightening friction coefficient μ=0.15
6. For SHG/SHF-LW series, use washers instead of putting the aluminum directly on the bolt bearing surface when tightening with the bolt from the (A) side.

SHG series: Installation of side (B) and transmission torque

Table 189-1

Item \ Model		14	17	20	25	32	40	45	50	58	65
Number of bolts		8	16	16	16	16	16	12	16	12	16
Bolt size		M3	M3	M3	M4	M5	M6	M8	M8	M10	M10
Installation of bolts: P.C.D.	mm	44	54	62	77	100	122	140	154	178	195
Bolt tightening torque	N·m	2.4	2.4	2.4	5.4	10.8	18.36	44	44	89	89
	kgf·m	0.24	0.24	0.24	0.55	1.10	1.87	4.5	4.5	9.1	9.1
Bolt transmission torque	N·m	88	216	248	520	1080	1867	2914	4274	5927	8658
	kgf·m	9.0	22	25.3	53	110	191	297	436	605	883

SHF series: Installation of side (B) and transmission torque

Table 189-2

Item \ Model		11	14	17	20	25	32	40	45	50	58
Number of bolts		6	8	16	16	16	16	16	12	16	12
Bolt size		M3	M3	M3	M3	M4	M5	M6	M8	M8	M10
Installation of bolts: P.C.D.	mm	37	44	54	62	77	100	122	140	154	178
Bolt tightening torque	N·m	2	2.0	2.0	2.0	4.5	9.0	15.3	37	37	74
	kgf·m	0.2	0.20	0.20	0.20	0.46	0.92	1.56	3.8	3.8	7.5
Bolt transmission torque	N·m	46	72	176	206	431	902	1558	2440	3587	4910
	kgf·m	4.6	7.3	18	21	44	92	159	249	366	501

(Table 189-1, 189-2/Notes)
1. It is assumed that the material of the female screws can endure the bolt tightening torque.
2. Recommended bolt Bolt name: JIS B 1176 hexagonal bolt Intensity type: JIS B 1051 12.9 or more
3. Torque efficiency: K=0.2
4. Tightening efficiency: A=1.4
5. Tightening friction coefficient μ=0.15

Precautions on installation

■Installation on the periphery of the oil seal

Install an oil seal on the mounting face so that they have a space of at least 1 mm between them to avoid interference with each other.

Fig. 190-1

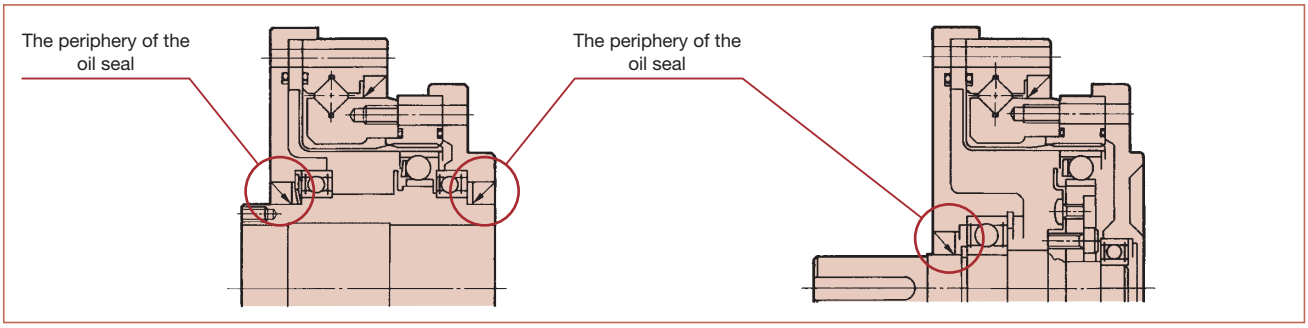

■Recessing of the mounting spigot

Recess the other side to use Portion A in the following figure as a mounting spigot.

Fig. 190-2

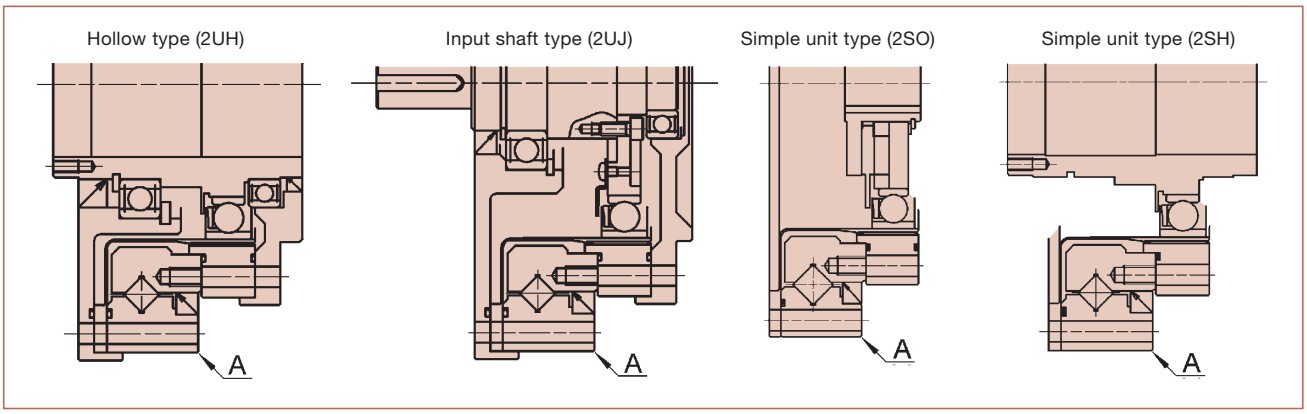

Recommended mounting spigot size on the other side of installation

Fig. 190-3
Unit: mm

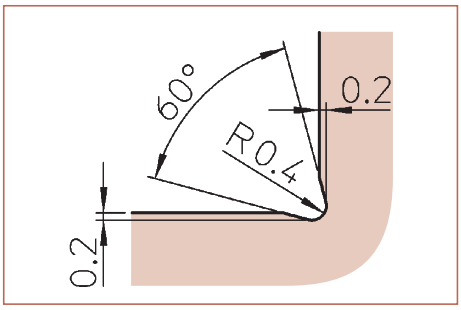

Technical data of hollow type (2UH)

Outline drawing of hollow type (2UH)

You can download the CAD data (DXF) of this product from the following homepage.
URL: https://www.hds.co.jp/

Fig. 191-1

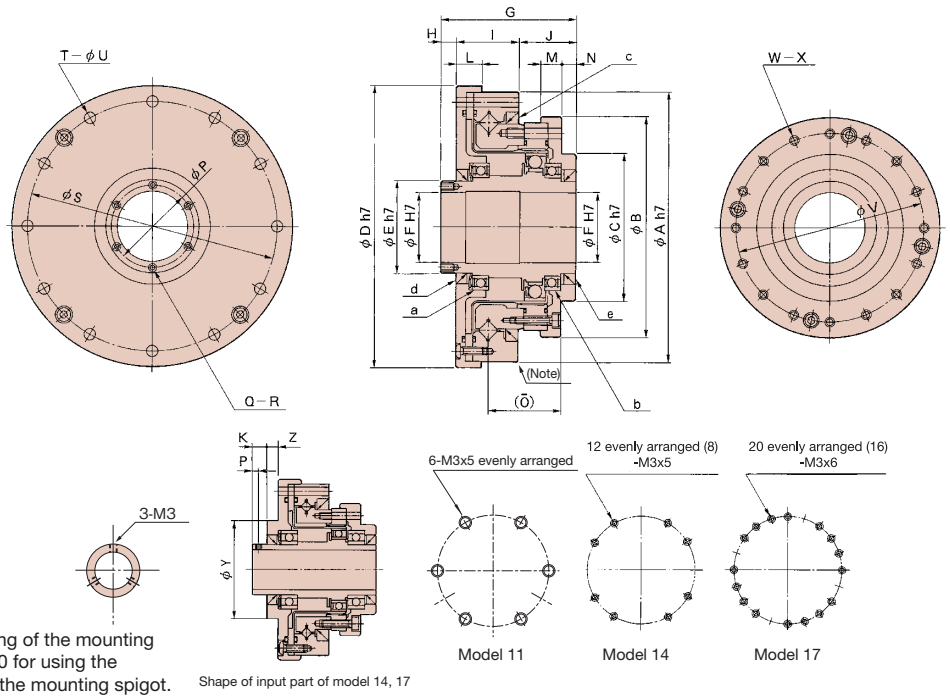

(Note) See recessing of the mounting spigot on Page 190 for using the applicable part as the mounting spigot.

* Check the delivered specifications for details of the sizes.
* The allowance varies depending on the part manufacturing method (cast or machined products). Contact us if the allowance is not described in the dimensions and is required.

Measurement table of hollow type (2UH)

Table 191-1
Unit: mm

Symbol \ Model		11	14	17	20	25	32	40	45	50	58	65
φA h7		62	70	80	90	110	142	170	190	214	240	276
φB	SHG/SHF Series	45.3	54	64	75	90	115	140	160	175	201	221
	SHG/SHF-LW Series	—	52	62	73	88	115	140	160	168	195	213
φC h7		30.5	36	45	50	60	85	100	120	130	150	160
φD h7		64	74	84	95	115	147	175	195	220	246	284
φE h7		18	20	25	30	38	45	59	64	74	84	96
φF H7		14	14	19	21	29	36	46	52	60	70	80
G		48	52.5	56.5	51.5	55.5	65.5	79	85	93	106	128
H		14	12	12	5	6	7	8	8	9	10	14
I		19	20.5	23	25	26	32	38	42	45	52	56.5
J		15	20	21.5	21.5	23.5	26.5	33	35	39	44	57.5
K		6.5	6.5	6.5	—	—	—	—	—	—	—	—
L		8	9	10	10.5	10.5	12	14	15	16	17	18
M	SHG/SHF Series	6.5	8	8.5	9	8.5	9.5	13	12	12	15	19.5
	SHG/SHF-LW Series	—	11.5	12	13.5	15.5	20.5	25	27	30	35	42.5
N		6.5	7.5	8.5	7	6	5	7	7	7	7	12
O		17.5	21.7	23.9	25.5	29.6	36.4	44	47.5	52.5	62.2	72
φP (P)		—	(2.5)	(2.5)	25.5	33.5	40.5	52	58	67	77	88
Q		—	3	3	6	6	6	6	6	6	8	6
R		—	M3	M3	M3×6	M3×6	M3×6	M4×8	M4×8	M4×8	M4×8	M5×10
φS		56.4	64	74	84	102	132	158	180	200	226	258
T		4	8	12	12	12	12	12	18	12	16	16
φU		3.5	3.5	3.5	3.5	4.5	5.5	6.6	6.6	9	9	11
φV		37	44	54	62	77	100	122	140	154	178	195
W		6	12 E. A. 8	20 E. A. 16	16	16	16	16	12	16	12	16
X	SHG/SHF Series	M3×5	M3×5	M3×6	M3×6	M4×7	M5×8	M6×10	M8×10	M8×11	M10×15	M10×15
		φ3.4×4	φ3.5×11.5	φ3.5×12	φ3.5×13.5	φ4.5×15.5	φ5.5×20.5	φ6.6×25	φ9×28	φ9×30	φ11×35	φ11×42.5
	SHG/SHF-LW Series	—	M3×5	M3×6	M3×6	M4×7	M5×8	M6×10	M8×10	M8×11	M10×15	M10×15
		—	φ3.5×11.5	φ3.5×12	φ3.5×13.5	φ4.5×15.5	φ5.5×20.5	φ6.6×25	φ9×27	φ9×30	φ11×35	φ11×42.5
φY		36	36	45	—	—	—	—	—	—	—	—
Z		7.5	5.5	5.5	—	—	—	—	—	—	—	—
a		6804 ZZ	6804 ZZ	6805 ZZ	6806 ZZ	6808 ZZ	6909 ZZ	6912 ZZ	6913 ZZ	6915 ZZ	6917 ZZ	6920 ZZ
b	SHG/SHF Series	6704 ZZ	6804 ZZ	6805 ZZ	6806 ZZ	6808 ZZ	6809 ZZ	6812 ZZ	6813 ZZ	6815 ZZ	6817 ZZ	6820 ZZ
	SHG/SHF-LW Series	—	6804 ZZ	6805 ZZ	6806 ZZ	6808 ZZ	6809 ZZ	6812 ZZ	6813 ZZ	6815 ZZ	6817 ZZ	6820 ZZ
c		D41.950.95	D49585	D59685	D69785	D84945	D1101226	D1321467	D1521707	D1681868	D1932129	D21623811
d	SHG/SHF Series	S18274	S20304.5	S25356	S30405	S38475	S45607	S60789	S658510	S759510	S8511012	S10012513
	SHG/SHF-LW Series	—	S20304.5	S25356	S30405	S38475	S45607	S60789	S658510	S759510	S8511012	S10012513
e	SHG/SHF Series	S18274	S20304.5	S25356	S30405	S38475	S45555	S59685	S59685	S69785	S84945	S961128
	SHG/SHF-LW Series	—	S20304.5	S25356	S30405	S38475	S45555	S59685	S59685	S69785	S84945	S961128

Mass of hollow type (2UH)

Table 192-1
Unit: kg

Symbol \ Model	11	14	17	20	25	32	40	45	50	58	65
2UH	0.53	0.71	1.00	1.38	2.1	4.5	7.7	10.0	14.5	20.0	28.5
2UH-LW (Light weight type)	—	0.55	0.8	1.1	1.6	3.6	6.2	8	11.8	16.4	23.3

Inertia moment of hollow type (2UH)

Table 192-2

Symbol \ Model			11	14	17	20	25	32	40	45	50	58	65
Inertia moment	I	$\times10^{-4}$kg·m^2	0.080	0.091	0.193	0.404	1.070	2.85	9.28	13.8	25.2	49.5	94.1
	J	$\times10^{-5}$kgf·ms^2	0.082	0.093	0.197	0.412	1.090	2.91	9.47	14.1	25.7	50.5	96.0

Starting torque of hollow type (2UH)

See "Engineering data" for a description of terms. As the values in the table below vary depending on the use conditions, use them as reference values.

Table 192-3
Unit: cN·m

Reduction ratio \ Model	11	14	17	20	25	32	40	45	50	58	65
30	—	11	30	43	64	112	—	—	—	—	—
50	7.1	8.8	27	36	56	85	136	165	216	297	—
80	—	7.5	25	33	50	74	117	138	179	244	314
100	5.9	6.9	24	32	49	72	112	131	171	231	297
120	—	—	24	31	48	68	110	126	165	223	287
160	—	—	—	31	47	67	105	122	156	213	276

Overdrive starting torque of hollow type (2UH)

See "Engineering data" for a description of terms. As the values in the table below vary depending on the use conditions, use them as reference values.

Table 192-4
Unit: N·m

Reduction ratio \ Model	11	14	17	20	25	32	40	45	50	58	65
30	—	5.4	17	23	35	57	—	—	—	—	—
50	4.6	5.3	16	22	34	51	82	99	129	178	—
80	—	7.2	24	31	48	70	112	133	172	234	301
100	7.6	8.2	29	38	59	86	134	158	205	278	356
120	—	—	34	45	69	97	158	182	237	322	413
160	—	—	—	59	90	128	201	233	299	408	530

On no-load running torque

No-load running torque means the torque on the input side (high-speed shaft side) required to put HarmonicDrive® under a no-load condition.

Measuring condition

Table 192-5

Reduction ratio 100			
Lubrication condition	Grease lubrication	Name	Harmonic grease® SK-1A
			Harmonic grease® SK-2
		Application qty.	Appropriate application quantity.
The torque value is the value after a trial run for two hours or longer at an input of 2000 r/min.			

■Correction quantity by reduction

The no-load running torque of HarmonicDrive® varies depending on the reduction ratio. Graphs 193-1 to 193-4 show the values for a reduction ratio of 100. Obtain other reduction ratios by adding the correction quantity shown in the right-hand table (Table 192-6).

Correction quantity for the no-load running torque of hollow type

Table 192-6
Unit: cN·m

Model \ Reduction ratio	30	50	80	120	160
11	—	+0.5	—	—	—
14	+2.6	+1.1	+0.2	—	—
17	+4.1	+1.8	+0.4	-0.2	—
20	+5.9	+2.6	+0.5	-0.4	-0.8
25	+9.6	+4.2	+0.8	-0.6	-1.3
32	+18.3	+8.0	+1.5	-1.1	-2.5
40	—	+13.3	+2.4	-1.7	-4.0
45	—	+18.2	+3.3	-2.4	-5.5
50	—	+23.9	+4.3	-3.1	-7.2
58	—	+34.6	+6.2	-4.4	-10.3
65	—	—	+8.1	-5.8	-13.7

■No-load running torque

SHF-11 Reduction ratio: 50

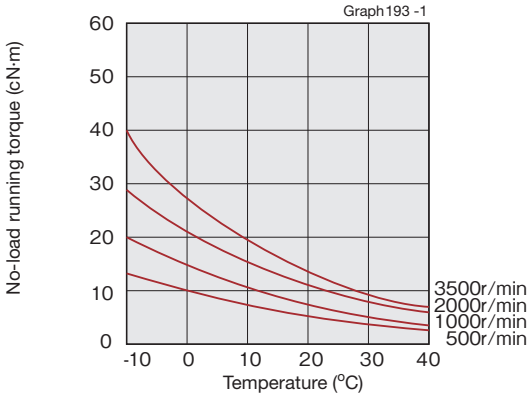

SHF-11 Reduction ratio: 100

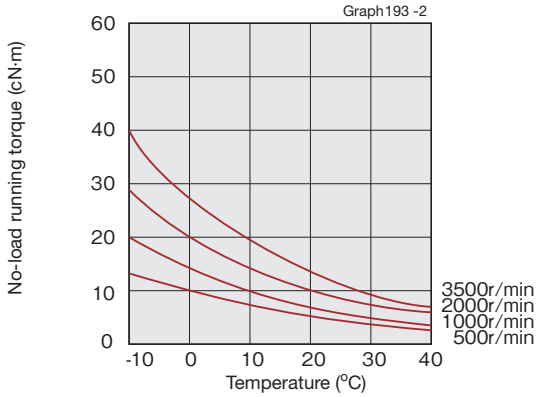

SHG/SHF-14 to 65 Reduction ratio: 100
Input rotational speed: 500r/min

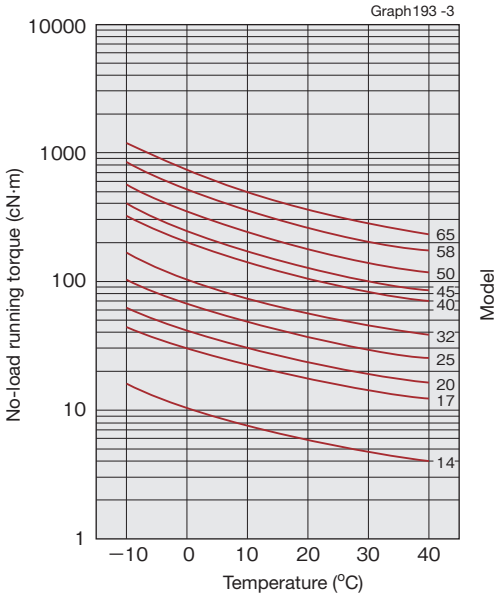

SHG/SHF-14 to 65 Reduction ratio: 100
Input rotational speed: 1000r/min

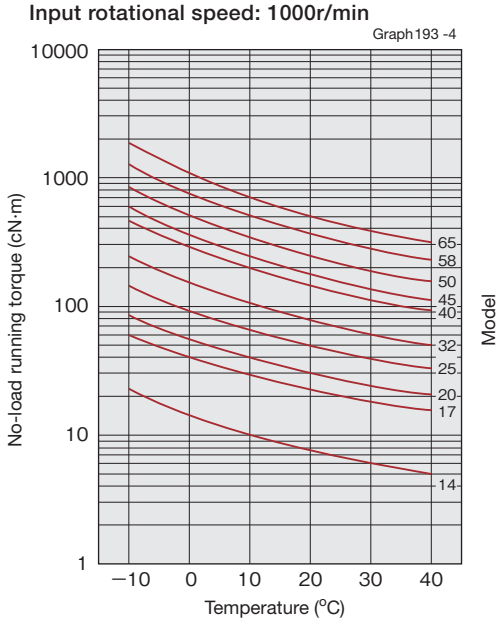

SHG/SHF-14 to 65 Reduction ratio: 100
Input rotational speed: 2000r/min

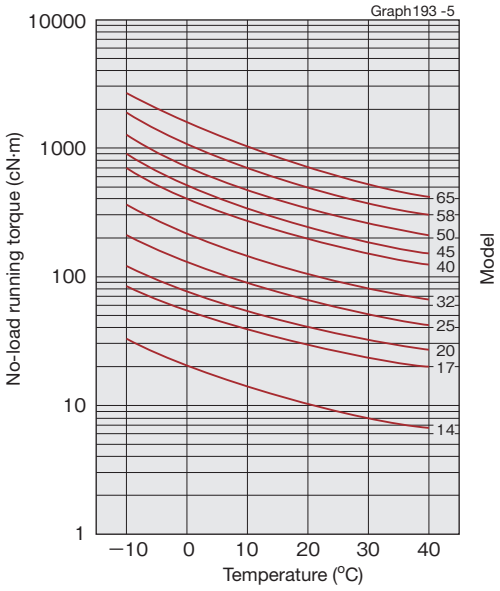

SHG/SHF-14 to 65 Reduction ratio: 100
Input rotational speed: 3500r/min

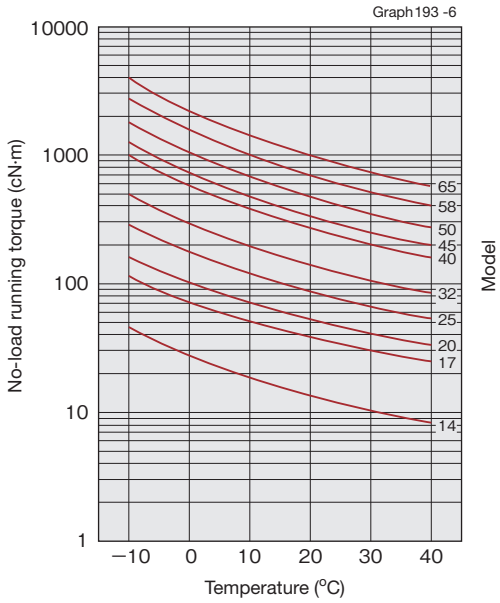

*The values in this graph are average values ($\overline{X}$). $\sigma \fallingdotseq \overline{X} \times 0.2$

Efficiency characteristics

The efficiency varies depending on the following conditions.

- Reduction ratio
- Input rotational speed
- Load torque
- Temperature
- Lubrication condition (Type of lubricant and the quantity)

Measuring condition

Table 194-1

Built-in	Measurement by building the recommended built-in precision into the product		
Load torque	The rated torque shown in the ratings (see the page 180 and 181)		
Lubricating condition	Grease lubrication	Name	Harmonic grease® SK-1A
			Harmonic grease® SK-2
		Application qty.	Appropriate application quantity

■Efficiency at rated torque

SHF-11 Reduction ratio 50

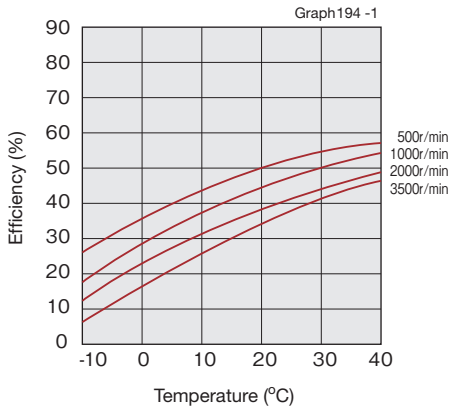

SHF-11 Reduction ratio 100

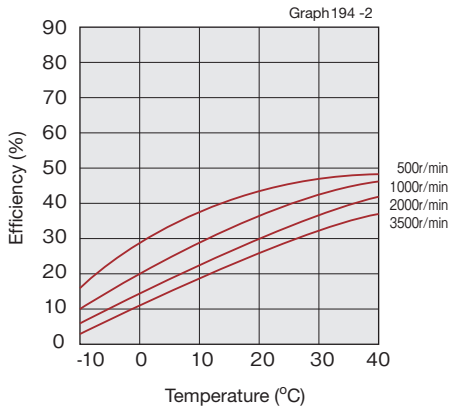

SHG/SHF-14 to 65
Reduction ratio 30

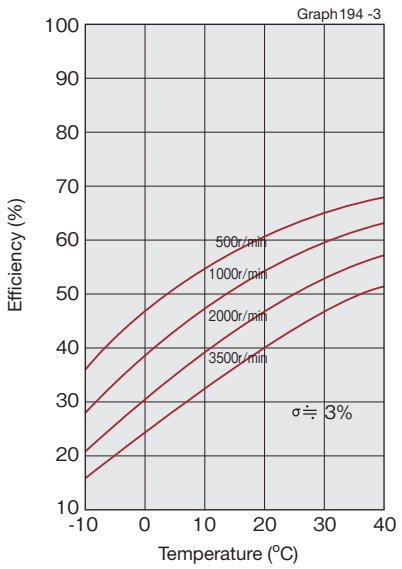

SHG/SHF-14 to 65
Reduction ratio 50, 80, 100, 120

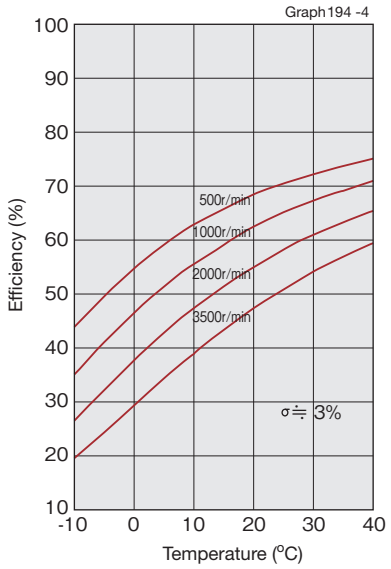

SHG/SHF-14 to 65
Reduction ratio 160

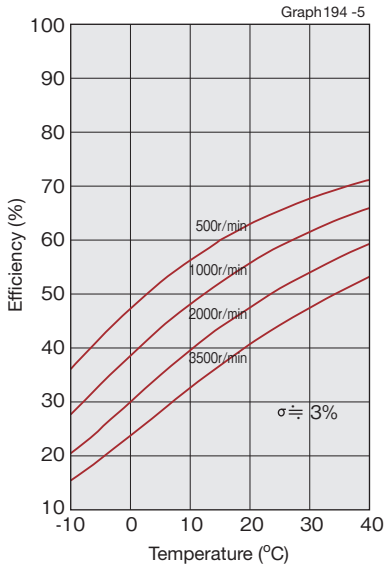

*The values in this graph are average values ($\bar{X}$). $\sigma \fallingdotseq \bar{X} \times 0.2$

■Efficiency correction coefficient and efficiency correction amount

Efficiency correction coefficient by load torque

When the load torque is lower than the rated torque, the efficiency value decreases. Obtain correction coefficient Ke from Graph 195-1.

* When the load torque is higher than the rated torque, efficiency correction value Ke is 1.

Efficiency correction coefficient of 2UH (hollow type) Graph 195-1

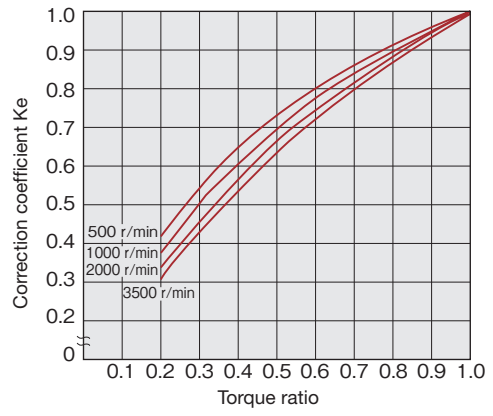

Efficiency correction amount by the model number

The unit type is equipped with a supporting bearing and oil seal on the input side. The degree of impact varies depending on the model number. Obtain the correction amount "ηe" for efficiency at the rated torque using the model number from Graph 195-2.

Efficiency correction amount of 2UH (hollow type) Graph 195-2

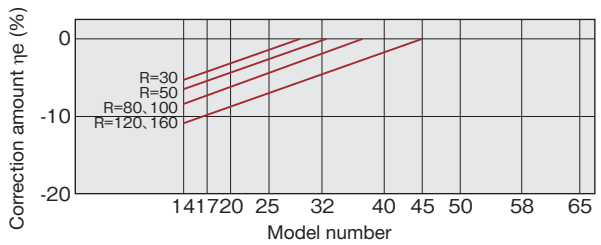

Efficiency correction calculation formula

Obtain the efficiency by the "Efficiency correction coefficient by load torque" and the "Efficiency correction amount by the model number" from the following formula.

Calculation formula Formula 195-1

$$\text{Efficiency}\eta = Ke \times (\eta_R + \eta e)$$

Symbols of the calculation formula Table 195-1

η	Efficiency	————
Ke	Efficiency correction coefficient	See Graph 195-1.
η_R	Efficiency at the rated torque	See Graph 194-1 through 194-5.
ηe	Efficiency correction amount	See Graph 195-2.

Continuous operating time of a hollow type (2UH)

The internal temperature rises due to the effect of the oil seal and the supporting bearing used for the input shaft (high-speed rotation side) for SHF-2UH. Observe the operating time shown in Table 195-2 for continuous operation.
The operating time shown in Table 195-2 is obtained based on the time required for the temperature inside the unit to rise to 80°C and for the oil seal temperature to rise to 100°C. Take care not to exceed the temperature given above in conducting continuous operation. The following review will be necessary if the temperature exceeds the value given above. Contact us in such an event.

- Change of timing to replace lubricant
- Change of lubricant
- Measures against lubricant leakage accompanied by the pressure rise inside the unit
- Measures against deterioration due to heat on the oil seal area

Setting condition Table 195-2

Operating temp.	25°C (ambient)
Input rotational speed	2000 r/min
Installation of the unit	Fix the flexspline. Output on the circular spline.

Continuous operating time Table 195-3

Model \ Operating time	Continuous operating time at no-load operation (min)	Continuous operating time at the rated load (min)
11	90	60
14	90	60
17	90	60
20	90	60
25	60	45
32	45	35
40	40	30
45	35	25
50	30	20
58	20	15
65	15	10

* Contact us as the continuous operating time may vary significantly depending on the operating condition.

Permissible load of the input part for the hollow type (2UH)

The hollow input part of the hollow type is supported by two single-row deep-groove bearings. Check the load applied to the input part to fully bring out the performance of the unit type. Figure 196-1 shows the supporting point of the bearing. See Table 196-1 for the size of (a) and (b). Graphs 196-1 and 196-2 show the relation between the maximum permissible radial load and the thrust load by the model number.
The values in Graph 196-1 and 196-2 are those assuming that the average input rotational speed is 2,000 r/min and the basic rated life, L_{10}, is 7,000 hours.

Example: In case the hollow input part of SHF-40-2UH is loaded with thrust load (Fa) of 500N, the value of max. permissible radial load will be 400N.

Bearing specifications of the input part

Table 196-1

Model	Bearing A			Bearing B			a	b	Maximum radial load
	Model	Basic dynamic rated load	Basic static rated load	Model	Basic dynamic rated load	Basic static rated load			
		Cr (N)	Cor (N)		Cr (N)	Cor (N)	(mm)	(mm)	Fr (N)
11	6804ZZ	4000	2470	6704ZZ	1400	720	25.7	15.5	—
14	6804ZZ	4000	2470	6804ZZ	4000	2470	27	16.5	230
17	6805ZZ	4300	2950	6805ZZ	4300	2950	29	17.5	250
20	6806ZZ	4500	3450	6806ZZ	4500	3450	27	15.5	275
25	6808ZZ	4900	4350	6808ZZ	4900	4350	29.5	16.5	250
32	6909ZZ	14100	10900	6809ZZ	5350	5250	33	23	770
40	6912ZZ	16400	14300	6812ZZ	11500	10900	39.5	27.5	1060
45	6913ZZ	17400	16100	6813ZZ	11900	12100	44	28.5	900
50	6915ZZ	24400	22600	6815ZZ	12500	13900	49	31.5	1370
58	6917ZZ	32000	29600	6817ZZ	18700	20000	56.2	36.5	1720
65	6920ZZ	42500	36500	6820ZZ	19600	21200	67	44.5	2300

Fig. 196-1

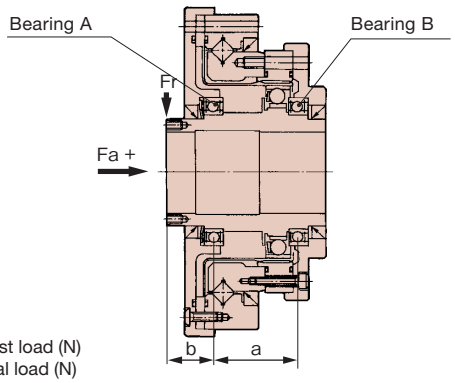

Fa: Thrust load (N)
Fr: Radial load (N)

Model 11 to 25

Graph 196-1

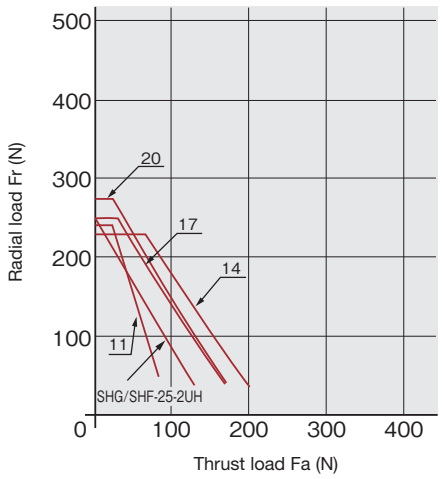

Model 32 to 65

Graph 196-2

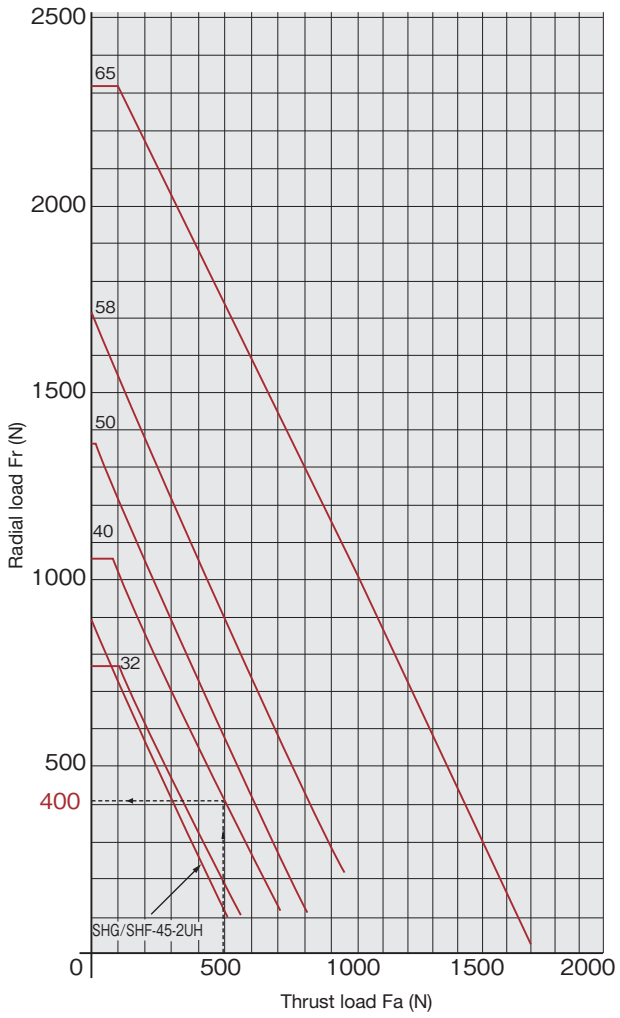

Technical data of input shaft (2UJ)

Outline drawing of input shaft (2UJ)

You can download the CAD data (DXF) of this product from the following homepage.
URL: https://www.hds.co.jp/

Fig. 197-1

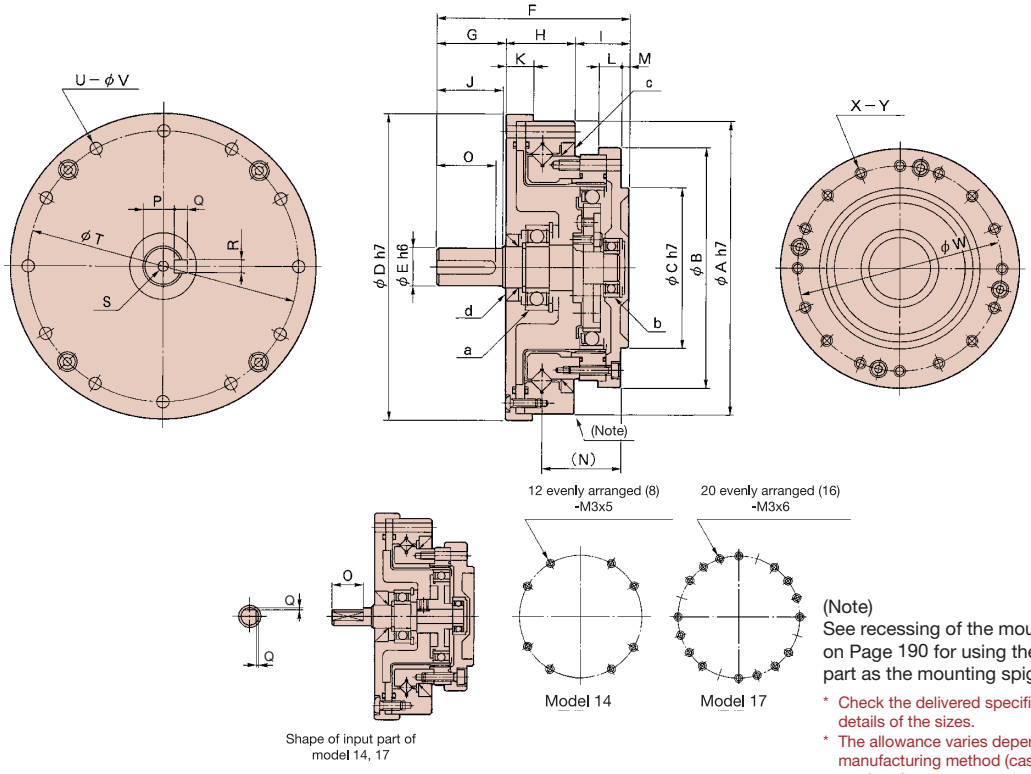

(Note)
See recessing of the mounting spigot on Page 190 for using the applicable part as the mounting spigot.

* Check the delivered specifications for details of the sizes.
* The allowance varies depending on the part manufacturing method (cast or machined products).
Contact us if the allowance is not described in the dimensions and is required.

Measurement table of input shaft (2UJ)

Table 197-1
Unit: mm

Symbol \ Model	14	17	20	25	32	40	45	50	58	65
ϕA h7	70	80	90	110	142	170	190	214	240	276
ϕB	54	64	75	90	115	140	160	175	201	221
ϕC h7	36	45	50	60	85	100	120	130	150	160
ϕD h7	74	84	95	115	147	175	195	220	246	284
ϕE h6	6	8	10	14	14	16	19	22	22	25
F	50.5	56	63.5	72.5	84.5	100	108	121	133	156
G	15	17	21	26	26	31	31	37	37	42
H	20.5	23	25	26	32	38	42	45	52	56.5
I	15	16	17.5	20.5	26.5	31	35	39	44	57.5
J	14	16	20	25	25	30	30	35	35	40
K	9	10	10.5	10.5	12	14	15	16	17	18
L	8	8.5	9	8.5	9.5	13	12	12	15	19.5
M	2.5	3	3	3	5	5	7	7	7	12
N	21.7	23.9	25.5	29.6	36.4	44	47.5	52.5	62.2	72
O	11	12	16.5	22.5	22.5	27.5	28	33	33	39
P	—	—	$8.2^{0}_{-0.1}$	$11^{0}_{-0.1}$	$11^{0}_{-0.1}$	$13^{0}_{-0.1}$	$15.5^{0}_{-0.1}$	$18.5^{0}_{-0.1}$	$18.5^{0}_{-0.1}$	$21^{0}_{-0.1}$
Q	0.5	0.5	$3^{0}_{-0.025}$	$5^{0}_{-0.030}$	$5^{0}_{-0.030}$	$5^{0}_{-0.030}$	$6^{0}_{-0.030}$	$6^{0}_{-0.030}$	$6^{0}_{-0.030}$	$7^{0}_{-0.036}$
R	—	—	$3^{0}_{-0.025}$	$5^{0}_{-0.030}$	$5^{0}_{-0.030}$	$5^{0}_{-0.030}$	$6^{0}_{-0.030}$	$6^{0}_{-0.030}$	$6^{0}_{-0.030}$	$8^{0}_{-0.036}$
S	—	—	M3×6	M5×10	M5×10	M5×10	M6×12	M6×12	M6×12	M8×16
ϕT	64	74	84	102	132	158	180	200	226	258
U	8	12	12	12	12	12	18	12	16	16
ϕV	3.5	3.5	3.5	4.5	5.5	6.6	6.6	9	9	11
ϕW	44	54	62	77	100	122	140	154	178	195
X	12 E. A. 8	20 E. A. 16	16	16	16	16	12	16	12	16
Y	M3×5	M3×6	M3×6	M4×7	M5×8	M6×10	M8×10	M8×11	M10×15	M10×15
	ϕ3.5×11.5	ϕ3.5×12	ϕ3.5×13.5	ϕ4.5×15.5	ϕ5.5×20.5	ϕ6.6×25	ϕ9×28	ϕ9×30	ϕ11×35	ϕ11×42.5
a	698 ZZ	6900 ZZ	6902 ZZ	6002 ZZ	6004 ZZ	6006 ZZ	6206 ZZ	6207 ZZ	6208 ZZ	6209 ZZ
b	695 ZZ	697 ZZ	698 ZZ	6900 ZZ	6902 ZZ	6003 ZZ	6004 ZZ	6005 ZZ	6006 ZZ	6007 ZZ
c	D49585	D59685	D69785	D84945	D1101226	D1321467	D1521707	D1681868	D1932129	D21623811
d	G8184	D10205	D15255	D15255	D20355	D30457	D30457	D35557	D40607	D45607

Mass of input shaft (2UJ)

Table 198-1
Unit: kg

Symbol \ Model	14	17	20	25	32	40	45	50	58	65
Mass (kg)	0.66	0.94	1.38	2.1	4.4	7.3	9.8	13.9	19.4	26.5

Inertia moment of input shaft (2UJ)

Table 198-2

Symbol \ Model			14	17	20	25	32	40	45	50	58	65
Inertia moment	I	$\times10^{-4}$kg·m^2	0.025	0.059	0.137	0.320	1.20	3.41	5.80	9.95	20.5	35.5
	J	$\times10^{-5}$kgf·ms^2	0.026	0.060	0.140	0.327	1.22	3.48	5.92	10.2	20.9	36.2

Starting torque of input shaft (2UJ)

See "Engineering data" for a description of terms. As the values in the table below vary depending on the use conditions, use them as reference values.

Table 198-3
Unit: cN·m

Reduction ratio \ Model	14	17	20	25	32	40	45	50	58	65
30	6.8	11	19	26	63	—	—	—	—	—
50	5.7	9.7	14	22	41	72	94	125	178	—
80	4.4	7.2	11	15	29	52	68	88	125	163
100	3.7	6.5	9.9	14	27	47	60	80	113	147
120	—	6.2	9.3	13	24	44	55	74	105	137
160	—	—	8.6	12	23	39	50	66	94	122

Overdrive starting torque of input shaft (2UJ)

See "Engineering data" for a description of terms. As the values in the table below vary depending on the use conditions, use them as reference values.

Table 198-4
Unit: N·m

Reduction ratio \ Model	14	17	20	25	32	40	45	50	58	65
30	3.5	5.9	10	16	31	—	—	—	—	—
50	3.4	5.8	8.4	13	25	43	56	75	107	—
80	4.2	6.9	10	15	28	50	65	85	120	154
100	4.5	7.8	12	17	33	56	72	96	135	176
120	—	8.9	13	19	34	63	79	106	151	198
160	—	—	17	23	43	75	96	126	181	235

On no-load running torque

No-load running torque means the torque on the input side (high-speed shaft side) required to put HarmonicDrive® under a no-load condition.

Measuring condition

Table 198-5

Reduction ratio 100			
Lubrication condition	Grease lubrication	Name	Harmonic grease® SK-1A
			Harmonic grease® SK-2
		Application qty.	Appropriate application quantity.
The torque value is the value after a trial run for two hours or longer at an input of 2,000 r/min.			

■Correction quantity by reduction

The no-load running torque of HarmonicDrive® varies depending on the reduction ratio. Graphs 199-1 to 199-4 show the values for a reduction ratio of 100. Obtain other reduction ratios by adding the correction quantity shown in the right-hand table (Table 198-2).

Correction quantity for the no-load running torque of hollow type

Table 198-6
Unit: cN·m

Reduction ratio \ Model	30	50	80	120	160
14	+2.6	+1.1	+0.2	—	—
17	+4.1	+1.8	+0.4	-0.2	—
20	+5.9	+2.6	+0.5	-0.4	-0.8
25	+9.6	+4.2	+0.8	-0.6	-1.3
32	+18.3	+8.0	+1.5	-1.1	-2.5
40	—	+13.3	+2.4	-1.7	-4.0
45	—	+18.2	+3.3	-2.4	-5.5
50	—	+23.9	+4.3	-3.1	-7.2
58	—	+34.6	+6.2	-4.4	-10.3
65	—	—	+8.1	-5.8	-13.7

■No-load running torque for a reduction ratio of 100

Input rotational speed: 500r/min

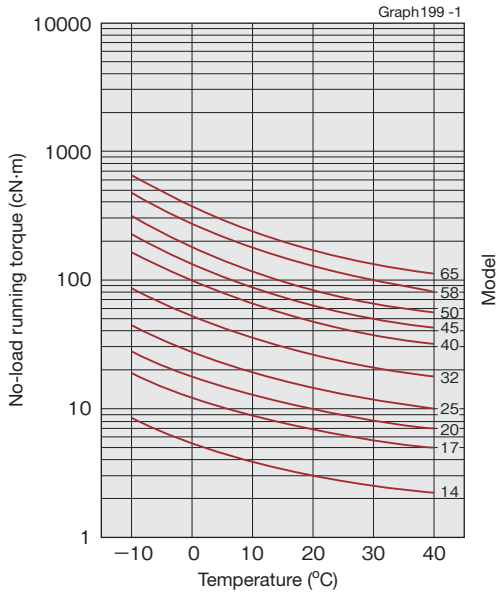

Input rotational speed: 1000r/min

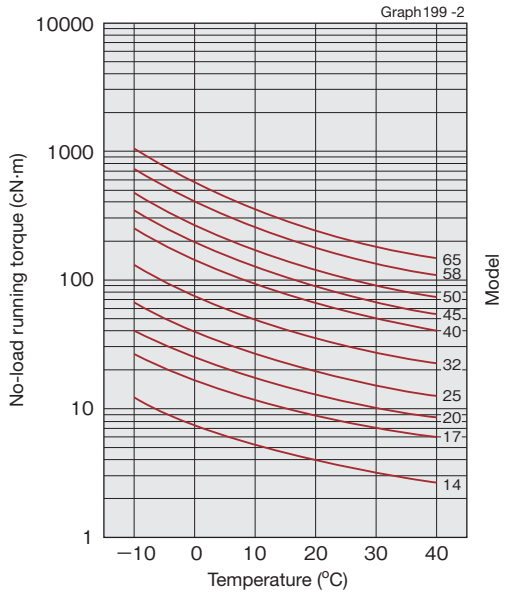

Input rotational speed: 2000r/min

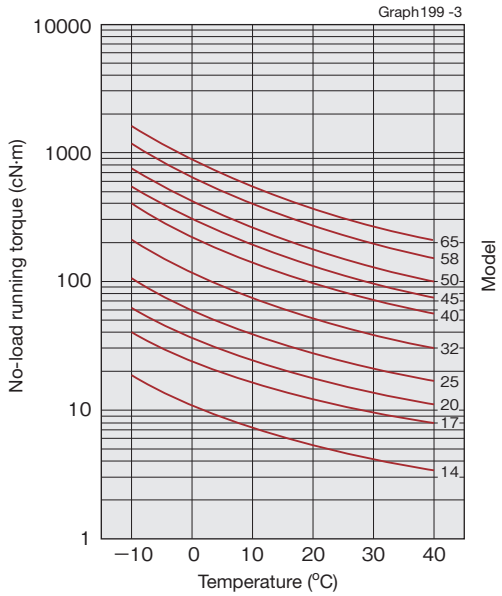

Input rotational speed: 3500r/min

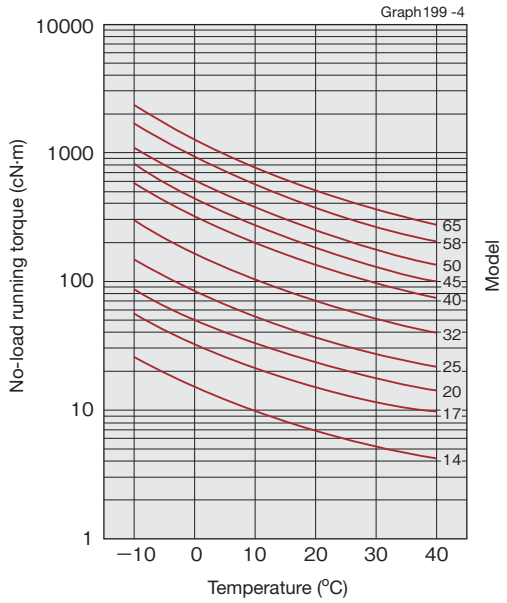

*The values in this graph are average values ($\bar{X}$). $\sigma \fallingdotseq \bar{X} \times 0.2$

Efficiency characteristics

The efficiency varies depending on the following conditions.

- Reduction ratio
- Input rotational speed
- Load torque
- Temperature
- Lubrication condition (Type of lubricant and the quantity)

Measuring condition

Table 200-1

Built-in	Measurement by building the recommended built-in precision into the product		
Load torque	The rated torque shown in the ratings (see the page 180 and 181)		
Lubricating condition	Grease lubrication	Name	Harmonic grease® SK-1A
			Harmonic grease® SK-2
		Application qty.	Appropriate application quantity

■Efficiency at rated torque

Reduction ratio 30

Graph200 -1

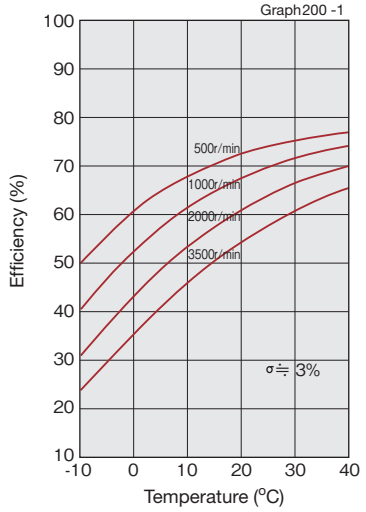

Reduction ratio 50, 80, 100, 120

Graph200 -2

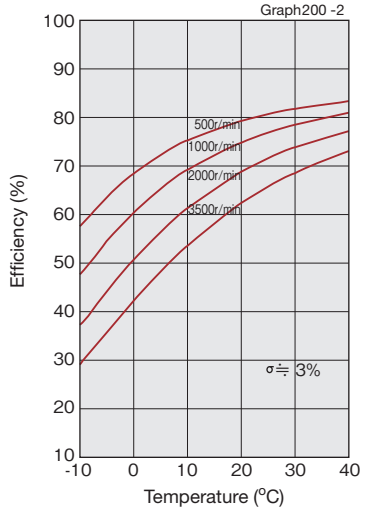

Reduction ratio 160

Graph200 -3

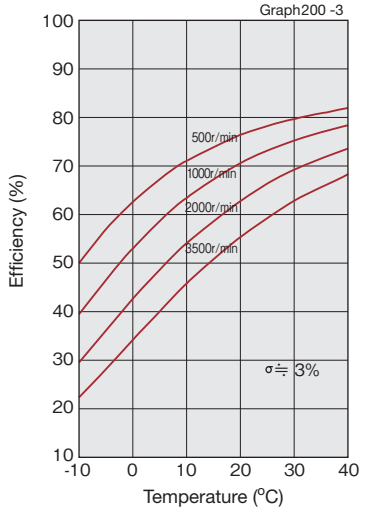

*The values in this graph are average values ($\bar{X}$). $\sigma \fallingdotseq \bar{X} \times 0.2$

■Efficiency correction coefficient and efficiency correction amount

Efficiency correction coefficient by load torque

When the load torque is lower than the rated torque, the efficiency value decreases. Obtain correction coefficient Ke from Graph 200-1.

* When the load torque is higher than the rated torque, efficiency correction value Ke is 1.

Efficiency correction amount by the model number

The unit type is equipped with a supporting bearing and oil seal on the input side. The degree of impact varies depending on the model number. Obtain the correction amount "ηe" for efficiency at the rated torque using the model number from Graph 200-2.

Efficiency correction coefficient of 2UJ (input shaft type)

Graph 200-4

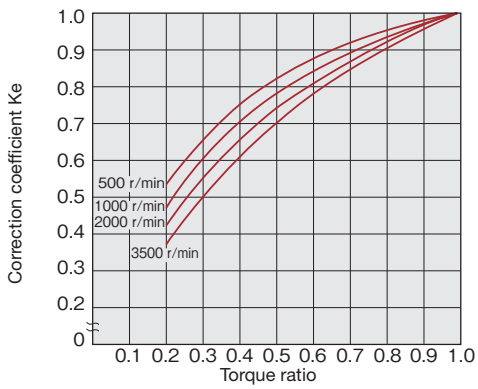

Efficiency correction amount of 2UJ (input shaft type)

Graph 200-5

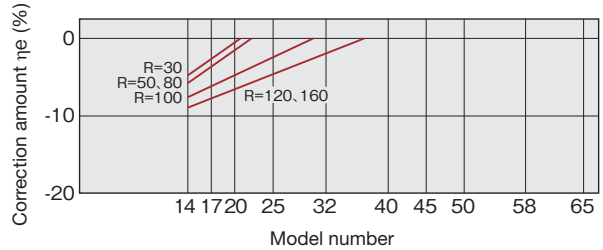

Efficiency correction calculation formula

Obtain the efficiency by the "Efficiency correction coefficient by load torque" and the "Efficiency correction amount by the model number" from the following formula.

Calculation formula

Formula 200-1

$$\text{Efficiency}\eta = Ke \times (\eta_R + \eta e)$$

Symbols of the calculation formula

Table 200-2

η	Efficiency	————
Ke	Efficiency correction coefficient	See Graph 200-1.
η_R	Efficiency at the rated torque	See Graph 200-1 through 200-3.
ηe	Efficiency correction amount	See Graph 200-2.

Permissible load of the input shaft of input shaft type (2UJ)

The input shaft of the input shaft type is supported by two single-row deep-groove bearings. Check the load applied to the input part to fully bring out the performance of the unit type.
Figure 201-1 shows the supporting point of the bearing. See Table 201-1 for the size of (a) and (b). Graphs 201-1 and 201-2 show the relation between the maximum permissible radial load and the thrust load by the model number.
The values in Graph 201-1 and 201-2 are those assuming that the average input rotational speed is 2,000 r/min and the basic rated life, L_{10}, is 7,000 hours.

Example: In case the hollow input part o SHF-45-2UJ is loaded with thrust load (Fa) of 500N, the value of max. permissible radial load will be 400N.
* For structural reasons, the input shaft moves in the axial direction when the external force is applied to it. However, it is not a malfunction.

Bearing specifications of the input part

Table 201-1

Model	Bearing A			Bearing B			a	b	Maximum radial load
	Model	Basic dynamic rated load	Basic static rated load	Model	Basic dynamic rated load	Basic static rated load			
		Cr (N)	Cor (N)		Cr (N)	Cor (N)	(mm)	(mm)	Fr (N)
14	698ZZ	2240	910	695ZZ	1080	430	20	14	110
17	6900ZZ	2700	1270	697ZZ	1610	710	23.5	21	135
20	6902ZZ	4350	2260	698ZZ	2240	910	26.5	23.3	210
25	6002ZZ	5600	2830	6900ZZ	2700	1270	28	28	270
32	6004ZZ	9400	5000	6902ZZ	4350	2260	36	27	490
40	6006ZZ	13200	8300	6003ZZ	6000	3250	43	32.5	660
45	6206ZZ	19500	11300	6004ZZ	9400	5000	47.5	34.5	1030
50	6207ZZ	25700	15300	6005ZZ	10100	5850	53	39	1330
58	6208ZZ	29100	17800	6006ZZ	13200	8300	62.5	40	1600
65	6209ZZ	32500	20500	6007ZZ	16000	10300	79	63	1650

Fig. 201-1

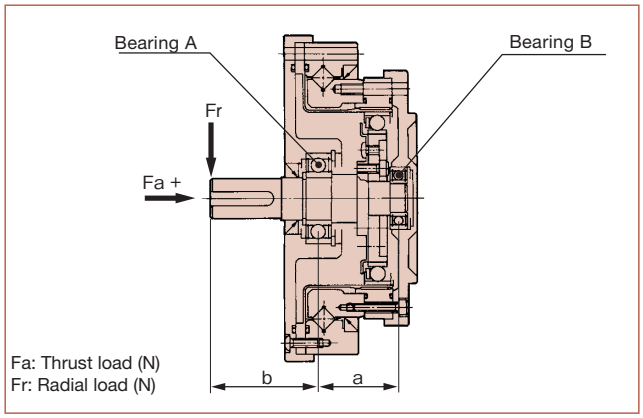

Model 32 to 65

Graph 201-2

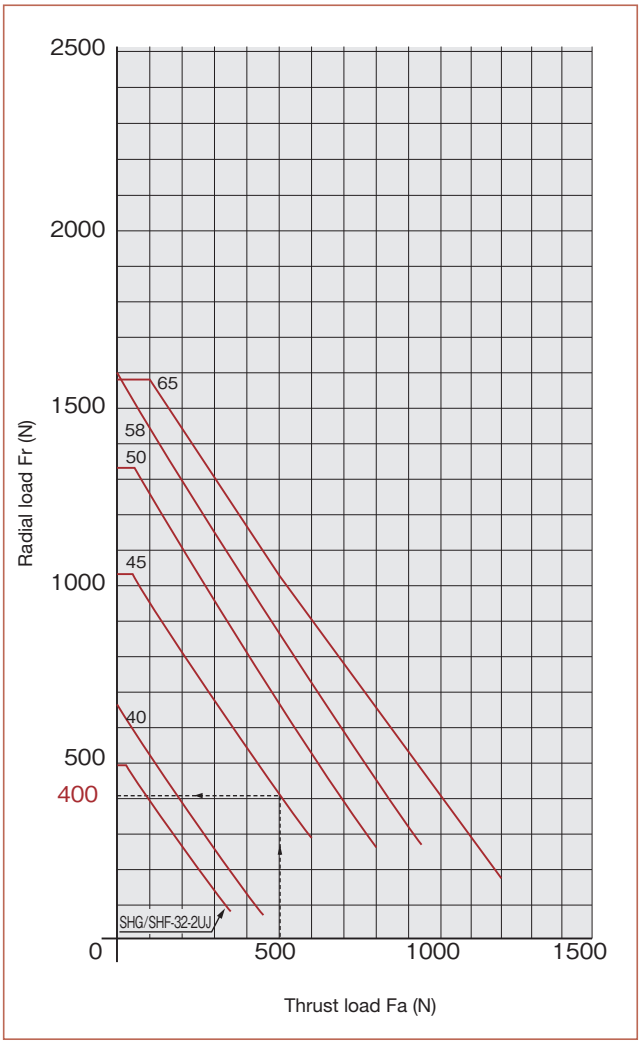

Model 14 to 25

Graph 201-1

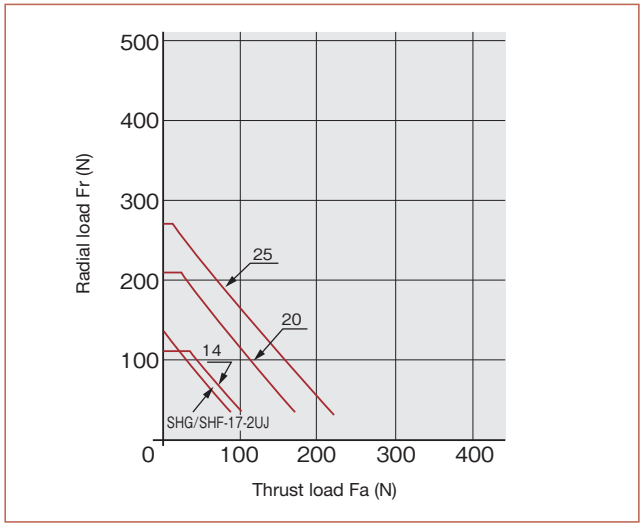

Technical data of simple unit type (2SO, 2SH)

Outline drawing of simple unit type (2SO)

You can download the CAD data (DXF) of this product from the following homepage.
URL: https://www.hds.co.jp/

Fig. 202-1

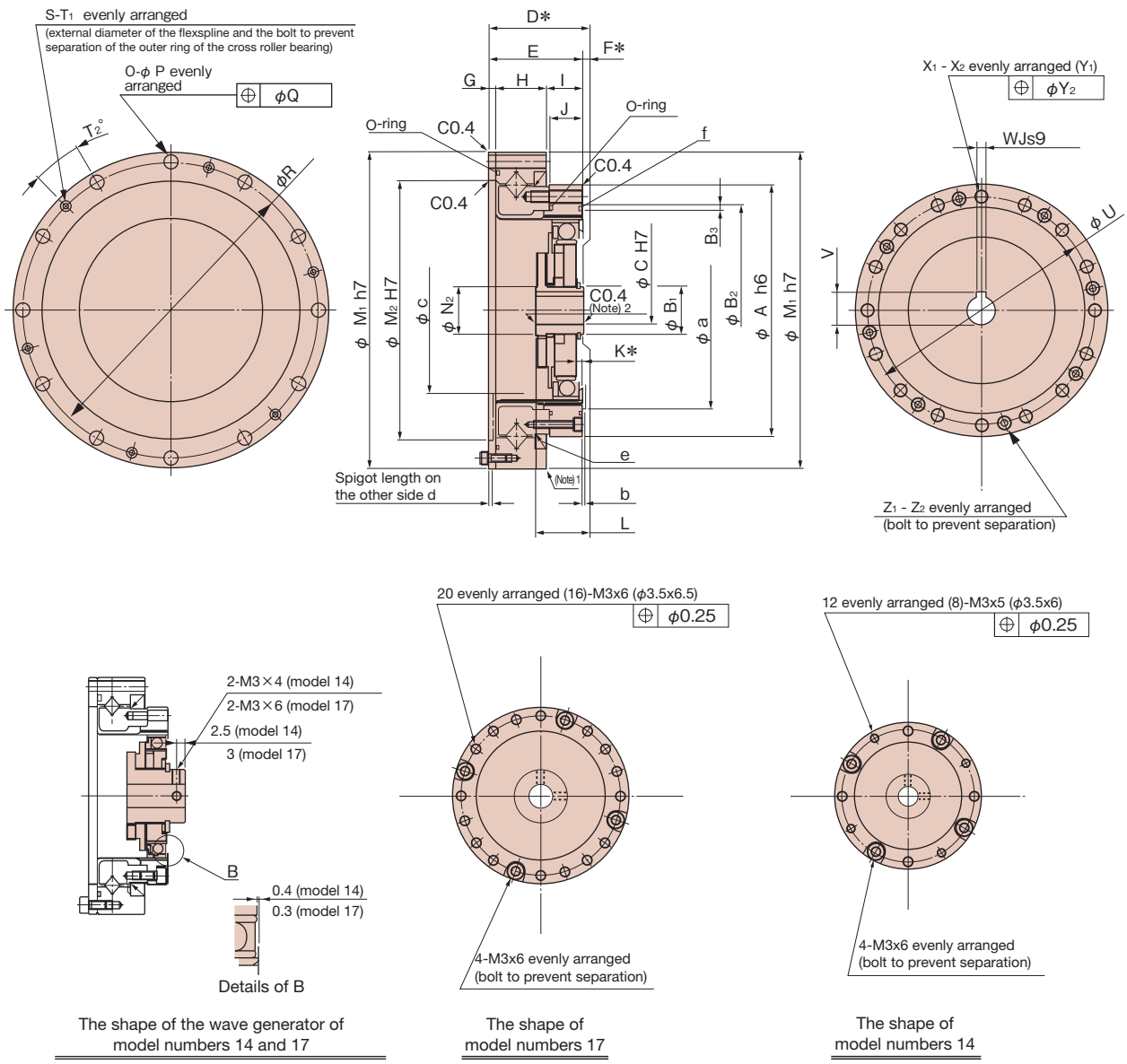

The shape of the wave generator of model numbers 14 and 17

The shape of model numbers 17

The shape of model numbers 14

(Note) 1. See recessing of the mounting spigot on Page 190 for using the applicable part as the mounting spigot.
2. For model 14, C0.5.

* Check the delivered specifications for details of the sizes.
* See Fig.084 -2 on Page 084 for the shapes of the wave generator.
* The allowance varies depending on the part manufacturing method (cast or machined products). Contact us if the allowance is not described in the dimensions and is required.
* Be careful not to remove the separation prevention bolt.

Measurement table of simple unit (2SO)

Table 203-1
Unit: mm

Symbol \ Model		14	17	20	25	32	40	45	50	58	65
ϕA h6		50	60	70	85	110	135	155	170	195	215
ϕB_1		14	18	21	26	26	32	32	32	40	48
ϕB_2		—	—	—	—	—	—	128	141	163	180.4
ϕB_3		—	—	—	—	—	—	2.7	2.7	2.7	2.7
ϕC	Standard (H7)	6	8	9	11	14	14	19	19	22	24
	Max. dimen.	8	10	13	15	16	20	20	20	25	30
D*	SHF Series	$28.5^{0}_{-0.8}$	$32.5^{0}_{-0.9}$	$33.5^{0}_{-1.0}$	$37^{0}_{-1.1}$	$44^{0}_{-1.1}$	$53^{0}_{-1.1}$	$58^{0}_{-1.2}$	$64^{0}_{-1.3}$	$75.5^{0}_{-1.3}$	—
	SHG Series	$28.5^{0}_{-0.4}$	$32.5^{0}_{-0.4}$	$33.5^{0}_{-0.4}$	$37^{0}_{-0.5}$	$44^{0}_{-0.6}$	$53^{0}_{-0.6}$	$58^{0}_{-0.6}$	$64^{0}_{-0.7}$	$75.5^{0}_{-0.7}$	$83^{0}_{-0.7}$
E		23.5	26.5	29	34	42	51	56.5	63	73	81.5
F*		5	6	4.5	3	2	2	1.5	1	2.5	1.5
G		2.4	3	3	3.3	3.6	4	4.5	5	5.8	6.5
H		14.1	16	17.5	18.7	23.4	29	32	34	40.2	43
I		7	7.5	8.5	12	15	18	20	24	27	32
J		6	6.5	7.5	10	14	17	19	22	25	29
K*	SHF Series	0.4	0.3	0.1	2.1	2.5	3.3	3.7	4.2	4.8	—
	SHG Series	1.4	1.6	1.5	3.5	4.2	5.6	6.3	7	8.2	9.5
L	SHF Series	$17.6^{0}_{-0.1}$	$19.5^{0}_{-0.1}$	$20.1^{0}_{-0.1}$	$20.2^{0}_{-0.1}$	$22^{0}_{-0.1}$	$27.5^{0}_{-0.1}$	$27.9^{0}_{-0.1}$	$32^{0}_{-0.1}$	$34.9^{0}_{-0.1}$	—
	SHG Series	$18.5^{0}_{-0.1}$	$20.7^{0}_{-0.1}$	$21.5^{0}_{-0.1}$	$21.6^{0}_{-0.1}$	$23.6^{0}_{-0.1}$	$29.7^{0}_{-0.1}$	$30.5^{0}_{-0.1}$	$34.8^{0}_{-0.1}$	$38.3^{0}_{-0.1}$	$44.6^{0}_{-0.1}$
ϕM_1 h7		70	80	90	110	142	170	190	214	240	276
ϕM_2 H7		48	60	70	88	114	140	158	175	203	232
ϕN_2		—	—	—	—	—	32	—	32	—	48
O		8	12	12	12	12	12	18	12	16	16
ϕP		3.5	3.5	3.5	4.5	5.5	6.6	6.6	9	9	11
ϕQ		0.25	0.25	0.25	0.25	0.25	0.3	0.3	0.5	0.5	0.5
ϕR		64	74	84	102	132	158	180	200	226	258
S		2	4	4	4	4	6	6	6	8	8
T_1		M3×6	M3×6	M3×8	M3×8	M4×8	M4×10	M4×8	M5×12	M5×12	M6×16
T_2 (angle)		22.5°	15°	15°	15°	15°	15°	10°	15°	11.25°	11.25°
ϕU		44	54	62	77	100	122	140	154	178	195
V		—	—	10.4	12.8	16.3	16.3	21.8	21.8	24.8	27.3
W Js9		—	—	3	4	5	5	6	6	6	8
X_1		12 E. A. 8	20 E. A. 16	16	16	16	16	12	16	12	16
X_2		M3×5	M3×6	M3×6	M4×7	M5×8	M6×10	M8×10	M8×11	M10×15	M10×15
Y_1		ϕ3.5×6	ϕ3.5×6.5	ϕ3.5×7.5	ϕ4.5×10	ϕ5.5×14	ϕ6.6×17	ϕ9×19	ϕ9×22	ϕ11×25	ϕ11×29
Y_2		0.25	0.25	0.25	0.25	0.25	0.3	0.5	0.5	0.5	0.5
Z_1		4	4	4	4	4	4	4	8	6	8
Z_2		M3×6	M3×6	M3×8	M3×10	M4×16	M5×20	M5×20	M5×25	M6×25	M6×30
Inner wall of the case	ϕa	38	45	53	66	86	106	119	133	154	172
	b	1	1	1.5	1.5	1.5	2	2	2	2.5	2.5
	ϕc	31	38	45	56	73	90	101	113	131	150
d		1.7	2.1	2	2	2	2	2.3	2.5	2.9	3.5
e		D49585	D59685	D69785	D84945	D1101226	D1321467	D1521707	D1681868	D1932129	D21623811
f		—	—	—	—	—	—	d1 121.5 d2 2.0	S135	d1 157.0 d2 2.0	S175

- You can change and add the following sizes

Wave Generator : C size
Flexspline : O and P size
Circular Spline : X_1 and X_2 size

- The D, F and K sizes indicated by an asterisk are the mounting positions in the shaft direction and allowance of the three parts (wave generator, flexspline, circular spline) comprising HarmonicDrive®. Strictly observe these sizes as they affect the performance and intensity.
- Take full sealing action during designing and installation as the circular spline of model numbers 14 to 40 has no O-ring groove (symbol: f) for sealing.
- As the flexspline is subject to elastic deformation, the inner wall should be ϕa, b, ϕc or more and it does not exceed d to prevent possible contact with the case.
- Wave generator is removed when the product is delivered.

Mass of simple unit type (2SO)

Table 203-2
Unit: kg

Symbol \ Model	14	17	20	25	32	40	45	50	58	65
Mass (kg)	0.41	0.57	0.81	1.31	2.94	5.1	6.5	9.6	13.5	19.5

Outline drawing of simple unit type (2SH)

You can download the CAD data (DXF) of this product from the following homepage.
URL: https://www.hds.co.jp/

Fig. 204-1

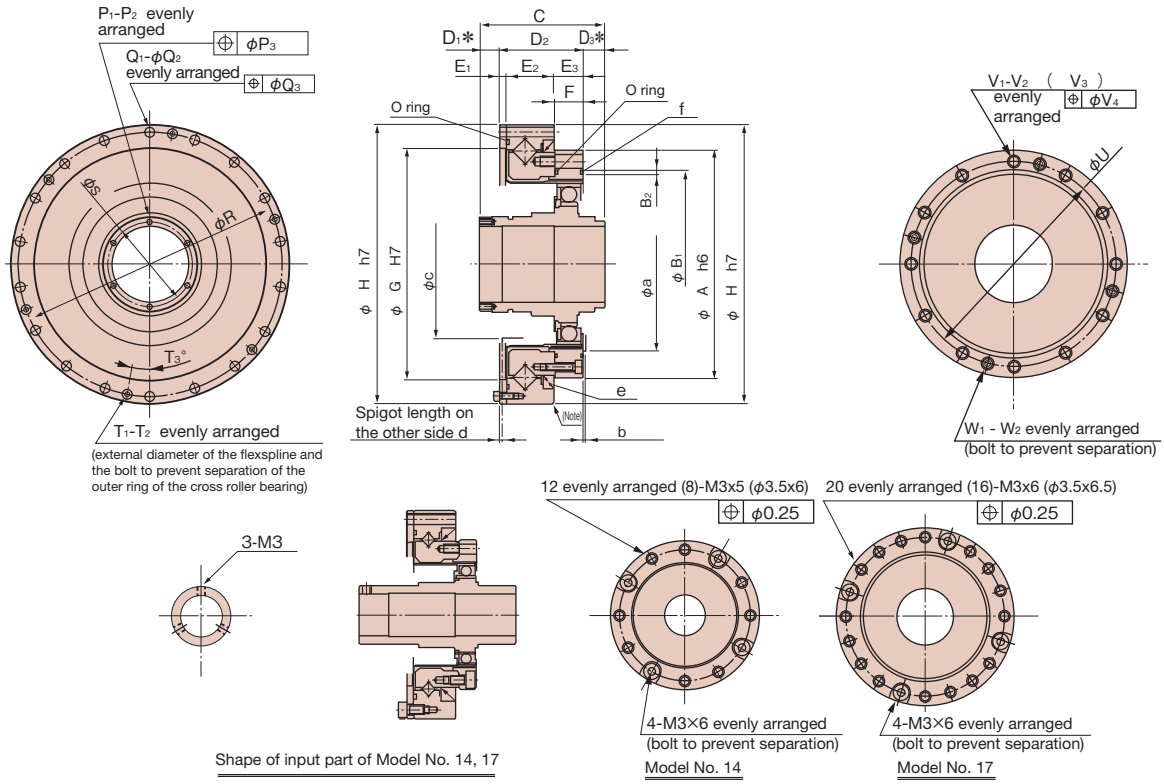

The shape of the wave generator of each model number

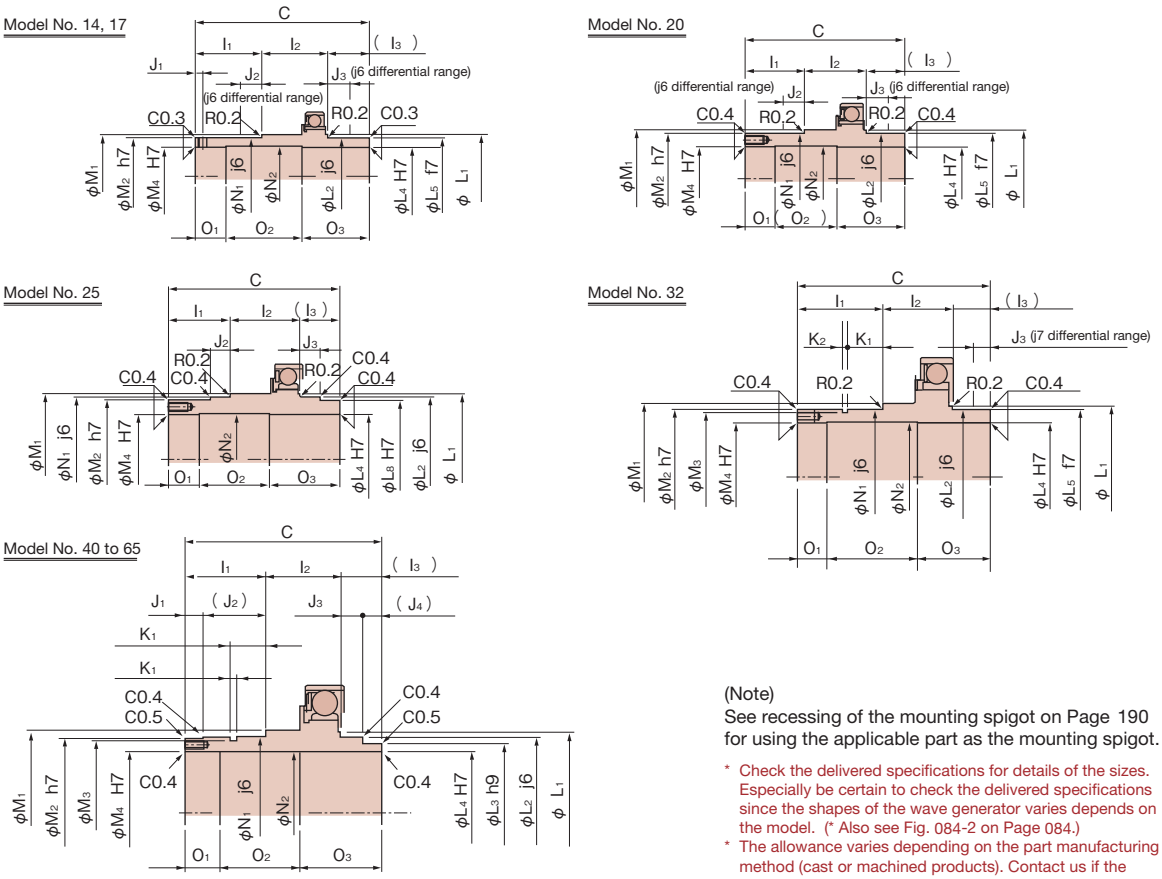

(Note)
See recessing of the mounting spigot on Page 190 for using the applicable part as the mounting spigot.

* Check the delivered specifications for details of the sizes. Especially be certain to check the delivered specifications since the shapes of the wave generator varies depends on the model. (* Also see Fig. 084-2 on Page 084.)
* The allowance varies depending on the part manufacturing method (cast or machined products). Contact us if the allowance is not described in the dimensions and is required.
* Be careful not to remove the separation prevention bolt.

Measurement table of simple unit (2SH)

Table 205-1
Unit: mm

Symbol \ Model			14	17	20	25	32	40	45	50	58	65
ϕA h6			50	60	70	85	110	135	155	170	195	215
ϕB_1			—	—	—	—	—	—	128	141	163	180.4
B_2			—	—	—	—	—	—	2.7	2.7	2.7	2.7
C			$52.5^{0}_{-0.1}$	$56.5^{0}_{-0.1}$	$51.5^{0}_{-0.1}$	$55.5^{0}_{-0.1}$	$65.5^{0}_{-0.1}$	$79^{0}_{-0.1}$	$85^{0}_{-0.1}$	$93^{0}_{-0.1}$	$106^{0}_{-0.1}$	$128^{0}_{-0.1}$
D_1*	SHF		$16^{+0.8}_{0}$	$16^{+0.9}_{0}$	$9.5^{+1.0}_{0}$	$10^{+1.1}_{0}$	$12^{+1.1}_{0}$	$13^{+1.1}_{0}$	$13.5^{+1.2}_{0}$	$15^{+1.3}_{0}$	$16^{+1.3}_{0}$	$21^{+1.3}_{0}$
	SHG		$16^{+0.4}_{0}$	$16^{+0.4}_{0}$	$9.5^{+0.4}_{0}$	$10^{+0.5}_{0}$	$12^{+0.6}_{0}$	$13^{+0.6}_{0}$	$13.5^{+0.6}_{0}$	$15^{+0.7}_{0}$	$16^{+0.7}_{0}$	$21^{+0.7}_{0}$
D_2			23.5	26.5	29	34	42	51	56.5	63	73	81.5
D_3*			13	14	13	11.5	11.5	15	15	15	17	25.5
E_1			2.4	3	3	3.3	3.6	4	4.5	5	5.8	6.5
E_2			14.1	16	17.5	18.7	23.4	29	32	34	40.2	43
E_3			7	7.5	8.5	12	15	18	20	24	27	32
F			6	6.5	7.5	10	14	17	19	22	25	29
ϕG H6			48	60	70	88	114	140	158	175	203	232
ϕH h6			70	80	90	110	142	170	190	214	240	276
Wave generator dimension	l_1		$20^{\pm0.1}$	$21.5^{\pm0.1}$	$19^{\pm0.1}$	$20^{\pm0.1}$	$29^{\pm0.1}$	$34^{\pm0.1}$	$35^{\pm0.1}$	$39.5^{\pm0.1}$	$45.3^{\pm0.1}$	$54.5^{\pm0.1}$
	l_2	SHF	$20^{\pm0.1}$	$21.5^{\pm0.1}$	$20^{\pm0.1}$	$22.5^{\pm0.1}$	$23.5^{\pm0.1}$	$28^{\pm0.1}$	$32.5^{\pm0.1}$	$36^{\pm0.1}$	$40.7^{\pm0.1}$	—
		SHG						$28.5^{\pm0.1}$				
	l_3	SHF	(12.5)	(13.5)	(12.5)	(13)	(13)	(17)	(17.5)	(17.5)	(20)	—
		SHG						(16.5)				
	J_1		2.5	2.5	—	—	—	—	8	9	10	14
	J_2		7	7	7	6.5	—	—	(27)	(30.5)	(35.3)	(40.5)
	J_3		7	7	7	6.5	—	9.5	9.5	9.5	12.5	11.5
	J_4	SHF	—	—	—	—	—	(7.5)	(8)	(8)	(7.5)	(11.5)
		SHG						(7)				
	K_1		—	—	—	—	13.9	15.1	15.6	18.6	21.1	23.1
	K_2		—	—	—	—	1.9	2.2	2.7	2.7	3.2	3.1
	ϕL_1		22	27	32	42	47	62	69	79	90	106
	ϕL_2 j6		20	25	30	40	45	60	65	75	85	100
	ϕL_3 h9		—	—	—	38	—	59	59	69	84	96
	ϕL_4 H7		14	19	21	29	36	46	52	60	70	80
	ϕL_5 f7		20	25	30	—	45	—	—	—	—	—
	ϕM_1		22	27	32	42	49	65	70	80	91.5	111
	ϕM_2 h7		20	25	30	38	45	59	64	74	84	96
	ϕM_3		—	—	—	—	42.5	57	62	72	81.5	96.5
	ϕM_4 H7		14	19	21	29	36	46	52	60	70	80
	ϕN_1 j6		20	25	30	40	45	60	65	75	85	100
	ϕN_2		14.5	19.5	21.5	29.5	36.5	46.5	52.5	60.5	70.5	80.5
	O_1		10	10	10	10	10	12	15	15	15	20
	O_2		22.5	24.5	(19.5)	22.5	(30.5)	(35)	35	41	48	54
	O_3		20	22	22	23	25	32	35	37	43	54
P_1			3	3	6	6	6	6	6	6	8	6
P_2			M3	M3	M3×6	M3×6	M3×6	M4×8	M4×8	M4×8	M4×8	M5×10
ϕP_3			—	—	0.25	0.25	0.25	0.25	0.25	0.25	0.25	0.25
Q_1			8	12	12	12	12	12	18	12	16	16
ϕQ_2			3.5	3.5	3.5	4.5	5.5	6.6	6.6	9	9	11
ϕQ_3			0.25	0.25	0.25	0.25	0.25	0.3	0.3	0.5	0.5	0.5
ϕR			64	74	84	102	132	158	180	200	226	258
ϕS			—	—	25.5	33.5	40.5	52	58	67	77	88
T_1			2	4	4	4	4	6	6	6	8	8
T_2			M3×6	M3×6	M3×8	M3×8	M4×8	M4×10	M4×10	M5×12	M5×12	M6×16
T_3 (angle)			22.5°	15°	15°	15°	15°	15°	10°	15°	11.25°	11.25°
ϕU			44	54	62	77	100	122	140	154	178	195
V_1			12 E.A. 8	20 E. A. 16	16	16	16	16	12	16	12	16
V_2			M3×5	M3×6	M3×6	M4×7	M5×8	M6×10	M8×10	M8×11	M10×15	M10×15
V_3			ϕ3.5×6	ϕ3.5×6.5	ϕ3.5×7.5	ϕ4.5×10	ϕ5.5×14	ϕ6.6×17	ϕ9×19	ϕ9×22	ϕ11×25	ϕ11×29
V_4			0.25	0.25	0.25	0.25	0.25	0.3	0.5	0.5	0.5	0.5
W_1			4	4	4	4	4	4	4	8	6	8
W_2			M3×6	M3×6	M3×8	M3×10	M4×16	M5×20	M5×20	M5×25	M6×25	M6×30
Inner wall of the case	ϕa		38	45	53	66	86	106	119	133	154	172
	b		1	1	1.5	1.5	1.5	2	2	2	2.5	2.5
	ϕc		31	38	45	56	73	90	101	113	131	150
d			1.7	2.1	2	2	2	2	2.3	2.5	2.9	3.5
e			D49585	D59685	D69785	D84945	D1101226	D1321467	D1521707	D1681868	D1932129	D21623811
f			—	—	—	—	—	—	d1 121.5 d2 2.0	S135	d1 157.0 d2 2.0	S175

- As the flexspline is subject to elastic deformation, the inner wall should be ϕa, b, ϕc or more and it does not exceed d to prevent possible contact with the case.
- The D_1 and D_3 sizes indicated by an asterisk are the mounting positions in the shaft direction and allowance of the three parts (wave generator, flexspline, circular spline) comprising HarmonicDrive®. Strictly observe these sizes as they affect the performance and intensity.
- Take full sealing action during designing and installation as the circular spline of model numbers 14 to 40 has no O-ring groove (symbol: f) for sealing.
- Wave generator is removed when the product is delivered.

Mass of unit type (2SH)

Table 206-1
Unit: kg

Symbol \ Model	14	17	20	25	32	40	45	50	58	65
Mass (kg)	0.45	0.63	0.89	1.44	3.1	5.4	6.9	10.2	14.1	20.9

Lubrication

Standard lubrication for simple unit type is grease lubrication. See “Engineering data” on Page 016 for details of the lubricant.

Application guide

As the simple unit type is shipped with the outer ring of the cross roller and the flexspline temporarily bound, grease is not applied other than to the tooth groove. Refer to the following application guide to apply grease.

Application guide

Fig. 206-1

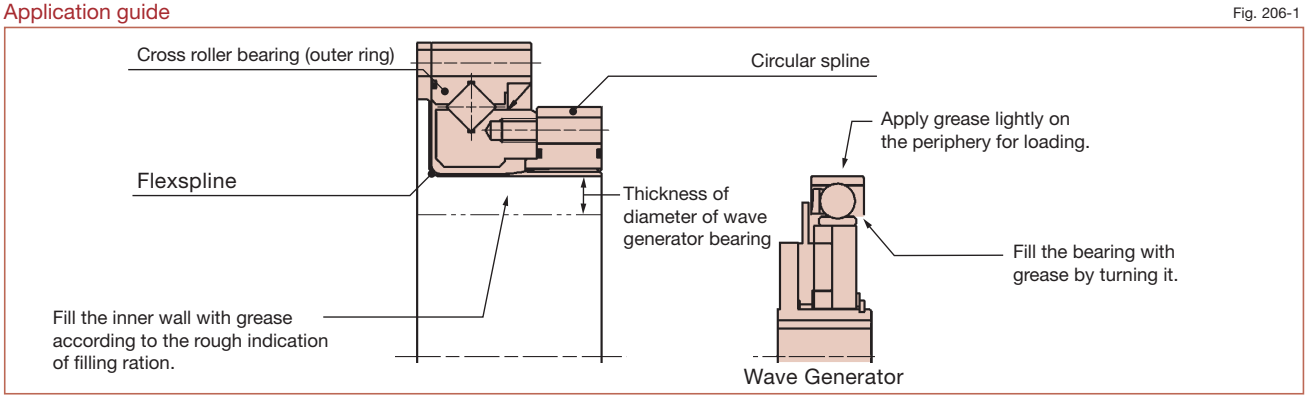

Application quantity

Table 206-2
Unit: g

Application \ Model		14	17	20	25	32	40	45	50	58	65
Horizontal use		5.8	11	18	32	64	120	185	235	385	495
Vertical use	Output shaft facing upward	7.5	13	19	37	74	130	200	255	400	530
	Output shaft facing downward	8.9	15	22	42	84	150	230	290	480	630

When to replace grease

Abrasion of the sliding parts of HarmonicDrive® is influenced by grease performance. Grease performance changes by temperature and deteriorates rapidly as the temperature rises. Therefore, the grease needs to be replaced earlier than usual. The graph below indicates the time to replace the grease from the relation between the grease temperature and the total number of rotations when the average load torque is equal to or less than the rated torque. Obtain the time to replace the grease from the following calculation formula when the average load torque exceeds the rated torque.

Calculation formula when the average load torque exceeds the rated torque

Formula 206-1

$$L_{GT}=L_{GTn} \times \left(\frac{Tr}{T_{av}}\right)^3$$

Symbols of the calculation formula

Table 206-3

L_{GT}	Replacement timing if it is equal to rated torque or more	Number of rotation	————
L_{GTn}	Replacement timing if it is equal to rated torque or less	Number of rotation	See Graph 206-1.
Tr	Rated torque	N·m, kgf·m	See the “Rating table” on page 180 and 181.
T_{av}	Average load torque on the output side		Calculation formula: See Page 014.

When to replace grease: L_{GTn} (when the average load torque is equal to or less than the rated torque)

Graph 206-1

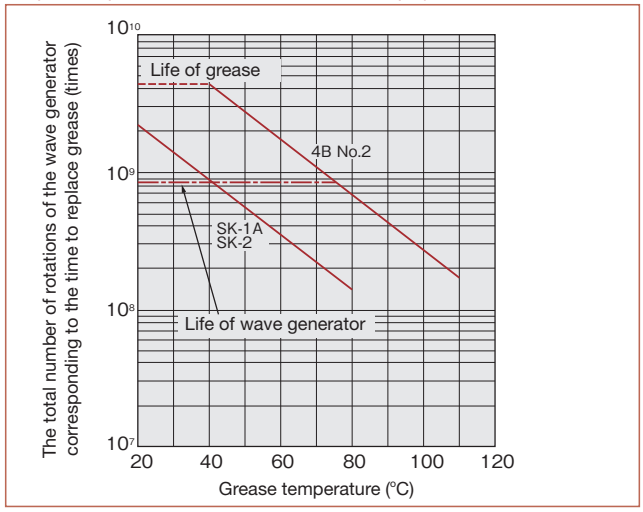

* Life of wave generator indicates the 10% of damage possibility.

■Other precautions

1. Avoid using it with other grease. HarmonicDrive® should be placed in an independent case to be built into the equipment.

2. When you use HarmonicDrive® with the wave generator facing upward (see Figure 050-2 on Page 050) at low-speed rotation (input rotational speed: 1000 r/min or less) and in one direction, you should contact our branch office as it may cause lubrication problems.

3. Fill the gap between the wave generator and the input cover (motor flange) with grease to use the wave generator facing upward or downward (see Figure 094-2 on Page 094).

Installation precision of the simple unit type

Keep the recommended precision shown in Figure 207-1 and Table 207-1 to fully bring out the excellent performance of the 2SO unit.

Fig. 207-1

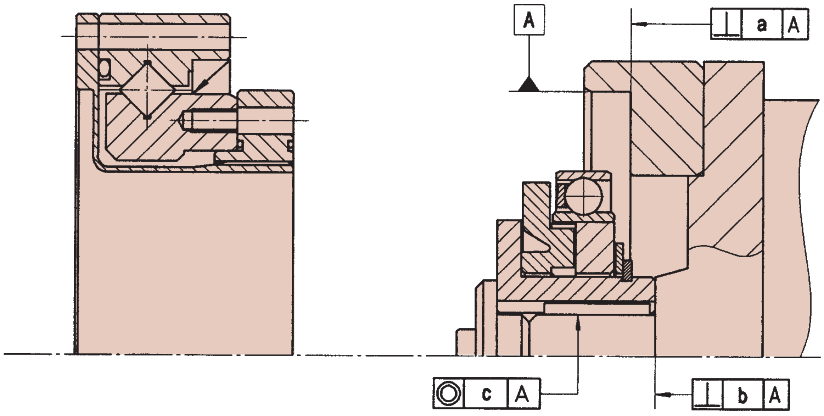

Table 207-1
Unit: mm

Size	14	17	20	25	32	40	45	50	58
a	0.011	0.015	0.017	0.024	0.026	0.026	0.027	0.028	0.031
b	0.017	0.020	0.020	0.024	0.024	0.024	0.032	0.032	0.032
	(0.008)	(0.010)	(0.010)	(0.012)	(0.012)	(0.012)	(0.012)	(0.015)	(0.015)
c	0.030	0.034	0.044	0.047	0.047	0.050	0.063	0.066	0.068
	(0.016)	(0.018)	(0.019)	(0.022)	(0.022)	(0.022)	(0.024)	(0.030)	(0.033)

* The value in the parentheses indicates the rigid type of wave generator (without Oldham's coupling mechanism).

Precautions on installation

■Installation sequence

Install the wave generator after setting the circular spline and the flexspline on the equipment. Installing the generator in other ways may cause a (dedoi-dal) condition (see Page 029) and damage the tooth plane. Take extra care.

Appropriate installation sequence

Fig. 207-2

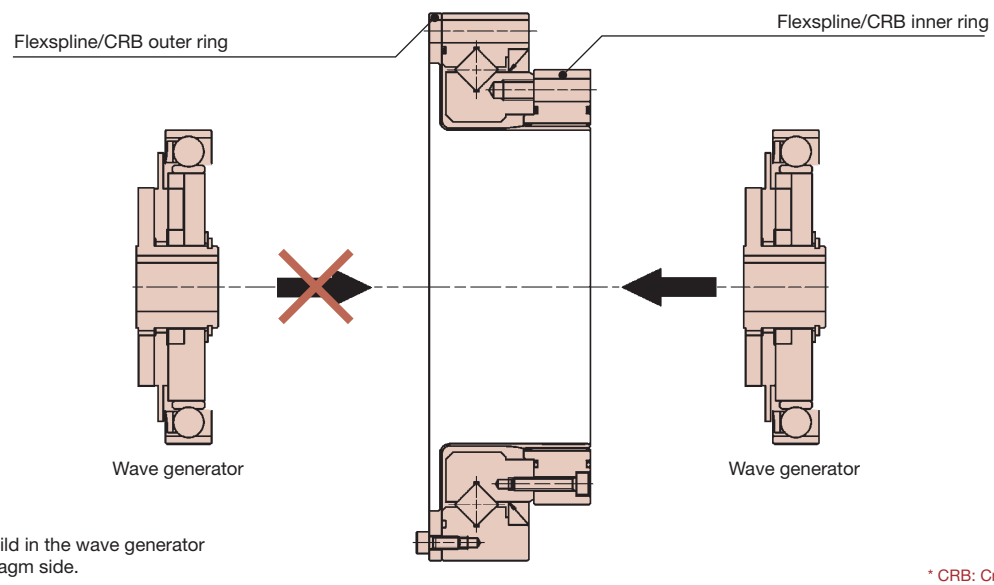

You may not build in the wave generator from the diaphragm side.

* CRB: Cross roller bearing

■Precautions on assembly

HarmonicDrive® may generate vibration and abnormal sound due to problems during assembly. Perform assembly based on the following precautions.

Precautions on the wave generator

1. Avoid such assembly where excessive force is applied to the wave generator bearing. You can smoothly insert the wave generator by turning it.

2. Pay attention so that the effect of misalignment and turnover is within the recommended value (see “Built-in precision” on each Page 207) for the wave generator without Oldham’s coupling mechanism.

Precautions on the circular spline

1. Is flatness of the mounting surface poor or distorted?

2. Is any embossment of the screw hole area, burr or trapped foreign matter found?

3. Have chamfering and relief working of the corner been conducted to prevent interference of the corner of the circular spline in the house built-in area?

4. Can the circular spline rotate built in the house? Does it interfere with or catch on any part?

5. Does any bolt inserted into the mounting bolt hole interfere with the circular spline and rotate irregularly due to the bolt hole being misaligned or oblique?

6. Do not tighten the bolts with the specified torque all at once. Tighten the bolts temporarily with about half the specified torque, and then tighten them with the specified torque. Tighten them in an even, crisscross pattern.

7. Avoid pinning the circular spline if possible as it may reduce the rotational precision.

Precautions on the flexspline

1. Is flatness of the mounting surface poor or distorted?

2. Is any embossment of the screw hole area, burr or trapped foreign matter found?

3. Have chamfering and relief working of the corner been conducted to prevent the interference of the corner of the circular spline in the house built-in area?

4. Does any bolt inserted into the mounting bolt hole interfere with the circular spline and rotate irregularly due to the bolt hole being misaligned or oblique?

5. Do not tighten the bolts with the specified torque all at once. Tighten the bolts temporarily with about half the specified torque, and then tighten them with the specified torque. Tighten them in an even, crisscross pattern.

6. Does it engage with the circular spline in an extremely unbalanced way when it is combined? If it is unbalanced, they could be misaligned or not upright.

On anti-rust provision

The surface of HarmonicDrive® is not anti-rust treated. Apply anti-rust agent to the surface if required. Contact us if you would like us to provide the surface with anti-rust treatment.

Application

Example of installing the hollow type (2UH) and the input shaft attached type (2UJ) on two basic shafts of a scalar-type robot

Placing a motor of the second shaft, SHF-2UJ, in the base using the hollow hole on the first shaft, SHF-2UH, enables reduction of the inertia load of the first shaft, making the arm part a smart design.
Moreover, a design combining the unit type reduces the number of man hours required for assembly and facilitates assembly precision.

Fig. 209-1

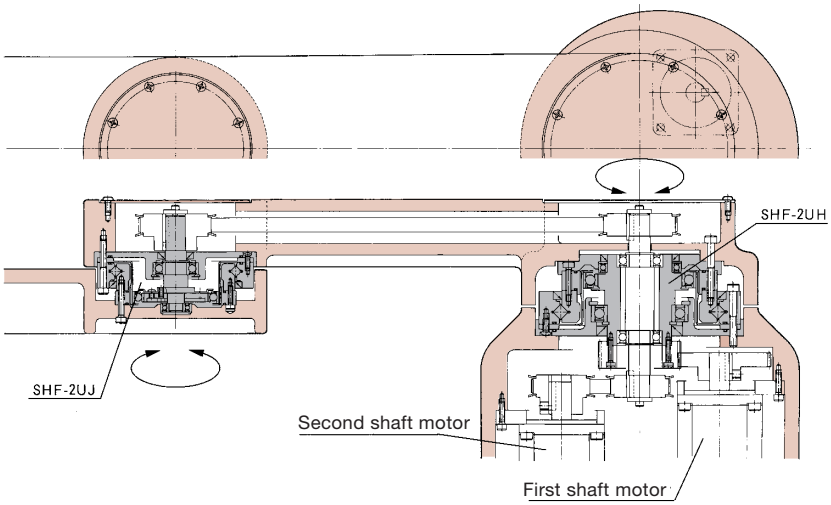

Example of installing the hollow type (2UH) and the input shaft attached type (2UJ) on the wrist shaft of a gantry-type robot

It is necessary to reduce the weight on the direct shaft to achieve the dynamic movement of a gantry-type robot. The wrist shaft should be light and compact to achieve this goal.
The entire weight on the wrist has been reduced by placing the drive motor outside the wrist shaft in this application example.

Fig. 210-1

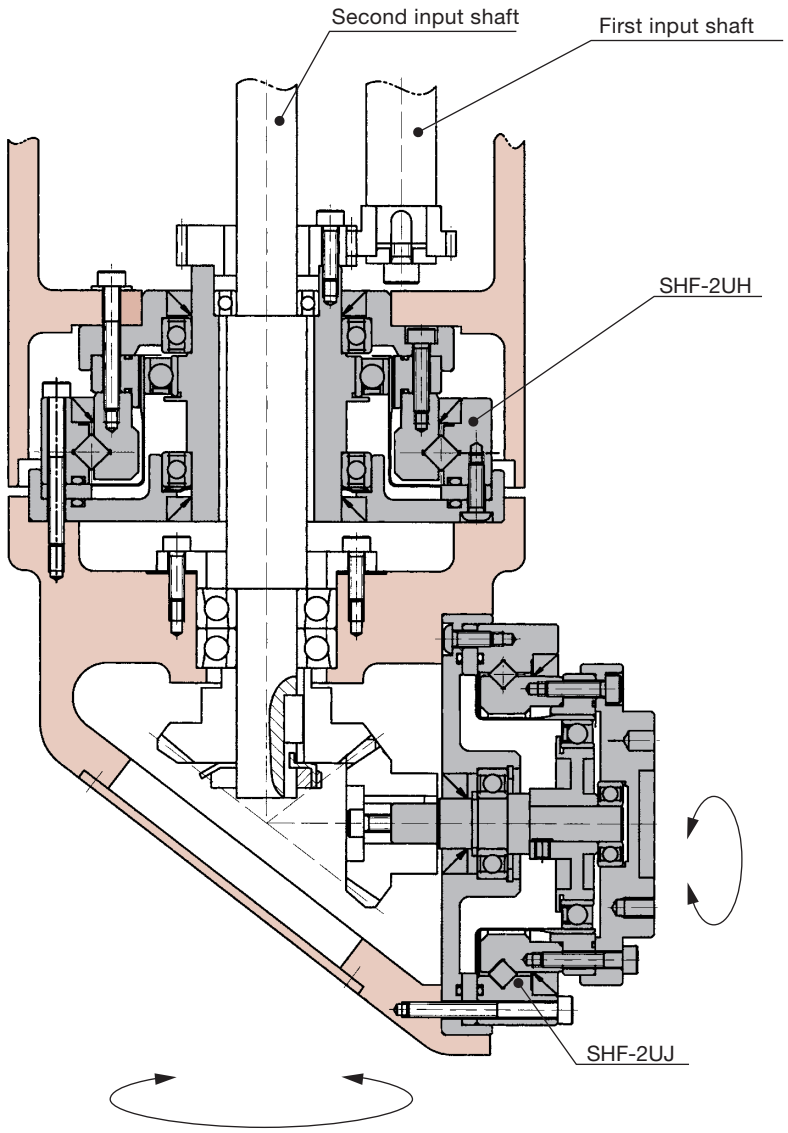

Example of installing the simple unit type (2SO) (the type without an input/output flange) on two basic shafts of a scalar-type robot

This is the simple unit type without an input/output flange to reduce the total cost.

* Contact us for the delivery of an unit of circular spline, flexspline and cross roller bearing. We have prepared a ring as shown in the figure as a tap hole has not been drilled on the outer ring of the cross roller bearing.

Fig. 211-1

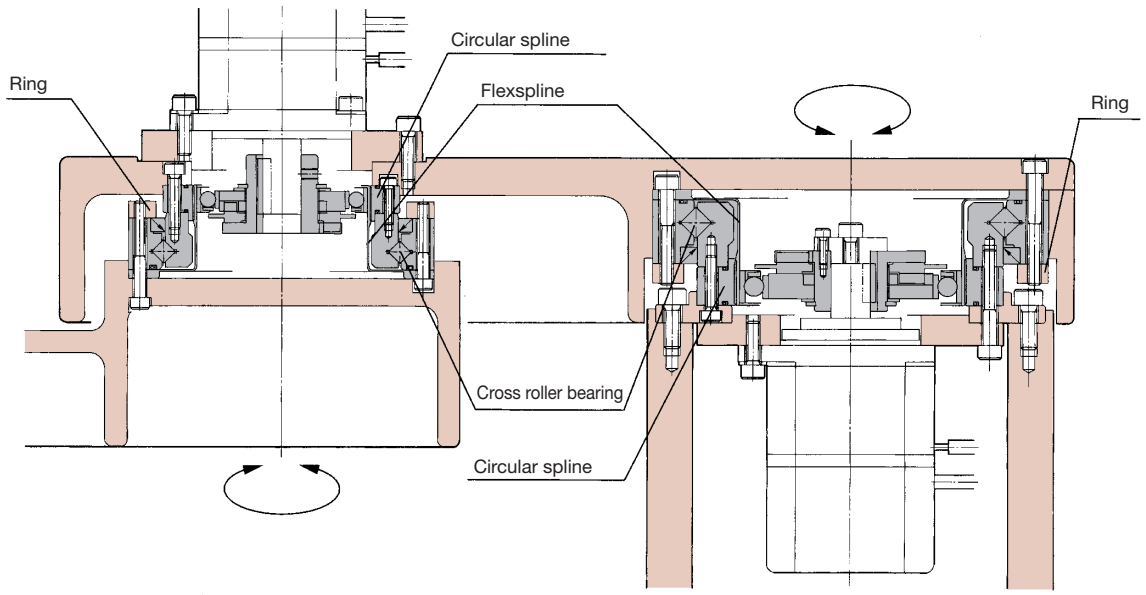

* For usage as this installation example, the sealing mechanism is required to prevent grease leakage.

■Application example of removing the oil seal of the hollow type (2UH)

The hollow-type 2UH is a seal unit using an oil seal on the input shaft (high-speed rotation side). It also uses a large-diameter oil seal to secure a hollow structure. This could lead to the problem of temperature rise due to friction loss. In this case, it can be used by removing the oil seal on the input/output sides of the unit if a small amount of grease leakage is allowed on the input shaft side and if grease can be sealed on the output shaft and the housing side (low-speed rotation side). Contact us in such an event.

Fig. 212-1

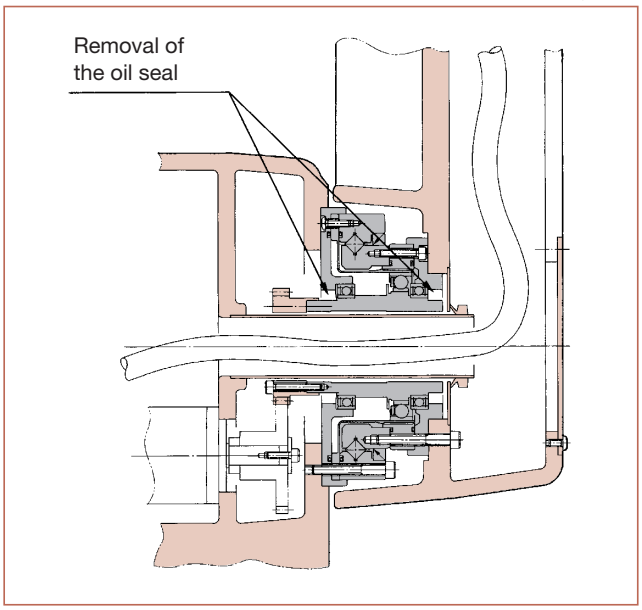

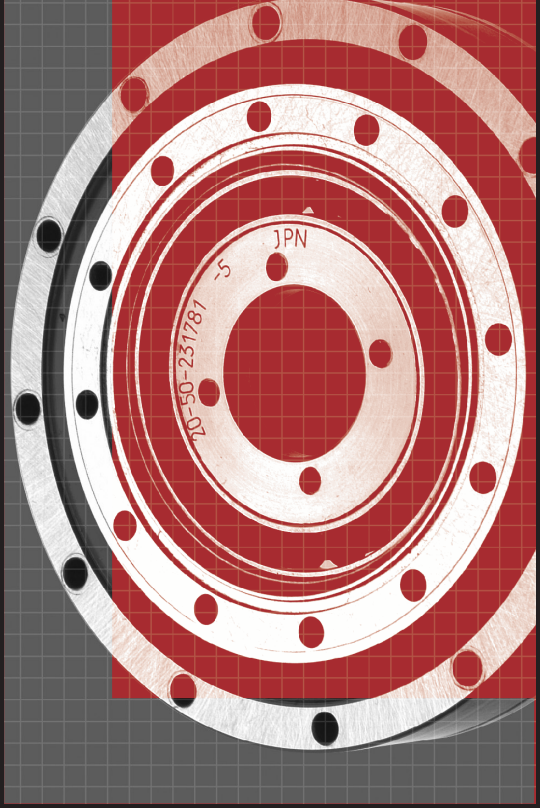

SHD Series

Unit Type SHD

Features

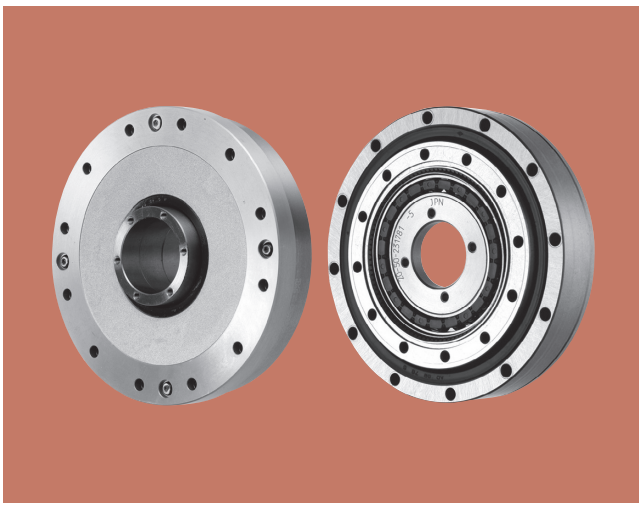

■SHD series unit type

The SHD series unit type has pursued flatness to the maximum. Compared with SHG/SHF series, the axial-direction length is reduced by about 50% in the simple unit type (2SH).
In addition to the flat shape, adoption of aluminum as the case material enables the unit type (2UH) to largely reduce the weight. HarmonicDrive® has succeeded in maximally utilizing the advantages of its shape such as lightweight, super flat, or large bore with hollow hole.

Features of SHD series

- ■Super flat shape and hollow structure
- ■Compact and simple design
- ■High torque capacity
- ■High stiffness
- ■Non-backlash
- ■High positioning and rotational accuracies
- ■Coaxial input and output
- ■2-type variation of simple unit type and unit type

Structure of SHD series unit type

Fig. 214-1

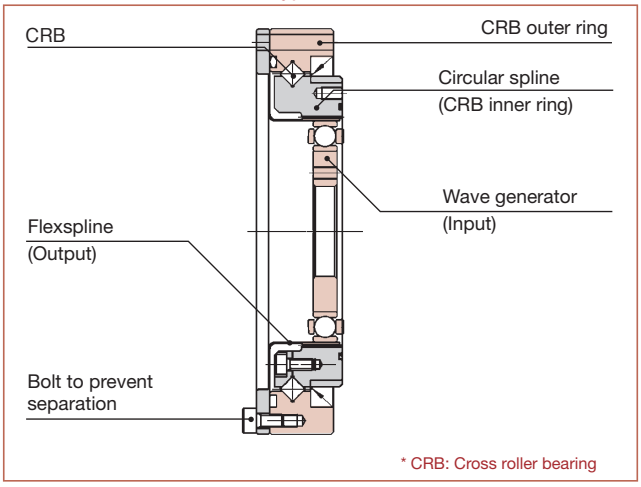

Comparison of lengths of shaft direction (Simple unit type)

Fig. 214-2

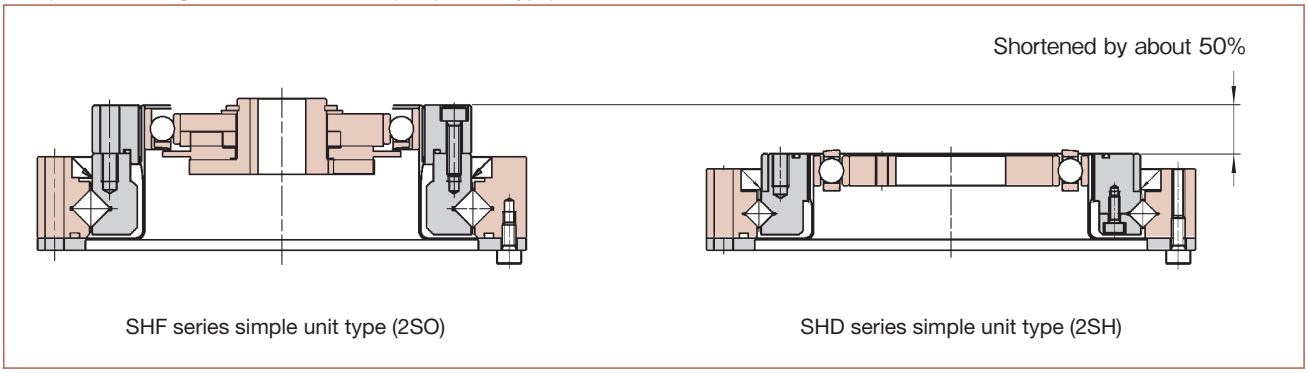

Comparison of lengths of shaft direction (Unit type)

Fig. 214-3

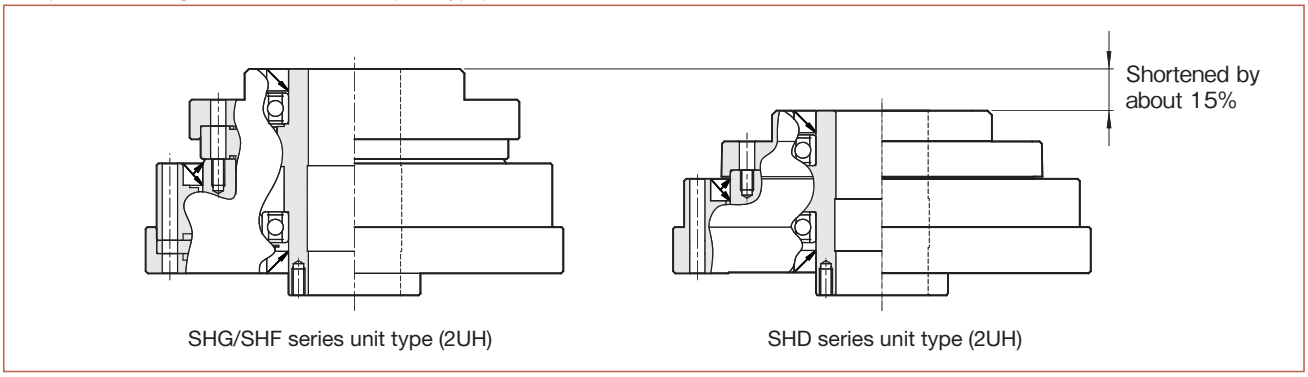

Example of building in the SHD series (Simple unit type)

Fig. 215-1

Scalar-type robot
This is best suited to various carrier devices on which a height limit may be imposed.

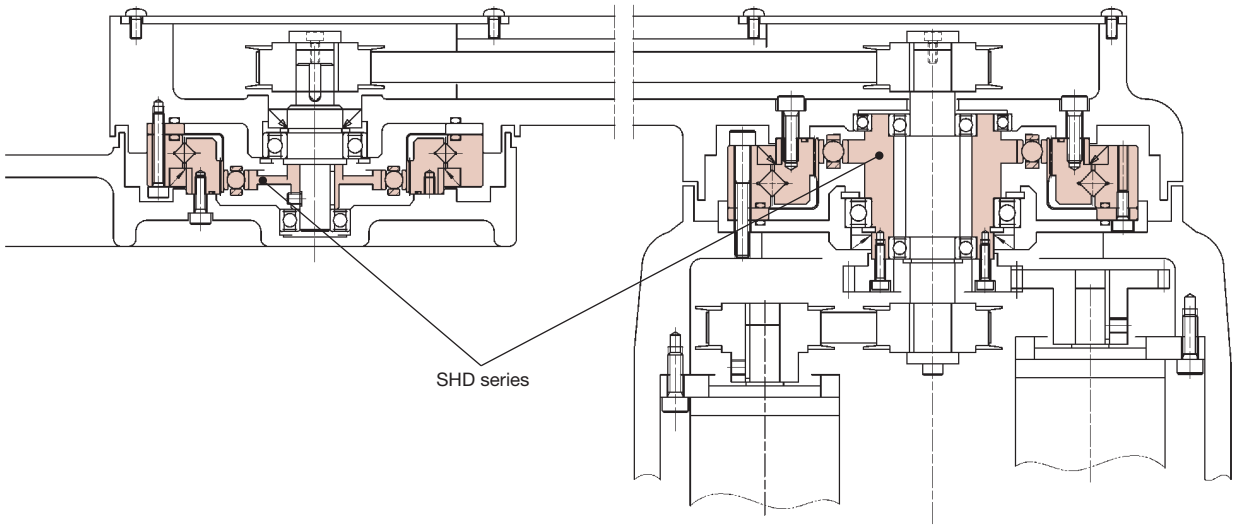

Model and Symbol

SHD - 20 - 100 - 2SH -SP1 - SP2

Table 215-1

Model name	Model	Reduction ratio*					Model	Special specification
SHD	14	50	80	100	—	—	2SH = Simple unit type 2UH = Unit type	LW= Light weight type SP= Special specifications such as shapes and performance None= Standard product
	17	50	80	100	120	—		
	20	50	80	100	120	160		
	25	50	80	100	120	160		
	32	50	80	100	120	160		
	40	50	80	100	120	160		

* The reduction ratio indicates the value for the following condition.
Input: wave generator, fixed: circular spline, output: flexspline

Technical Data

Rating table

Table 216-1

Model	Reduction ratio	Rated torque at input 2000r/min		Peak torque at start/stop		Permissible max. value of ave. load torque		Instantaneous permissible max. torque		Permissible max. input rotational speed (r/min)	Permissible ave. input rotational speed (r/min)	Inertia moment (2SH/Simple unit type)		Inertia moment (2UH/Unit type)	
		N·m	kgf·m	N·m	kgf·m	N·m	kgf·m	N·m	kgf·m	Grease lubricant	Grease lubricant	I $\times10^{-4}$kg·m^2	J $\times10^{-5}$kgf·m^2	I $\times10^{-4}$kg·m^2	J $\times10^{-5}$kgf·ms^2
14	50	3.7	0.38	12	1.2	4.8	0.49	23	2.3	8500	3500	0.021	0.021	0.064	0.065
	80	5.4	0.55	16	1.6	7.7	0.79	35	3.6						
	100	5.4	0.55	19	1.9	7.7	0.79	35	3.6						
17	50	11	1.1	23	2.3	18	1.8	48	4.9	7300	3500	0.054	0.055	0.141	0.144
	80	15	1.5	29	3.0	19	1.9	61	6.2						
	100	16	1.6	37	3.8	27	2.8	71	7.2						
	120	16	1.6	37	3.8	27	2.8	71	7.2						
20	50	17	1.7	39	4.0	24	2.4	69	7.0	6500	3500	0.090	0.092	0.271	0.276
	80	24	2.4	51	5.2	33	3.4	89	9.1						
	100	28	2.9	57	5.8	34	3.5	95	9.7						
	120	28	2.9	60	6.1	34	3.5	95	9.7						
	160	28	2.9	64	6.5	34	3.5	95	9.7						
25	50	27	2.8	69	7.0	38	3.9	127	13	5600	3500	0.282	0.288	0.793	0.809
	80	44	4.5	96	9.8	60	6.1	179	18						
	100	47	4.8	110	11	75	7.6	184	19						
	120	47	4.8	117	12	75	7.6	204	21						
	160	47	4.8	123	13	75	7.6	204	21						
32	50	53	5.4	151	15	75	7.6	268	27	4800	3500	1.09	1.11	2.900	2.957
	80	83	8.5	213	22	117	12	398	41						
	100	96	9.8	233	24	151	15	420	43						
	120	96	9.8	247	25	151	15	445	45						
	160	96	9.8	261	27	151	15	445	45						
40	50	96	9.8	281	29	137	14	480	49	4000	3000	2.85	2.91	7.432	7.578
	80	144	15	364	37	198	20	686	70						
	100	185	19	398	41	260	27	700	71						
	120	205	21	432	44	315	32	765	78						
	160	206	21	453	46	316	32	765	78						

(Note) 1. Inertia moment: $I=\frac{1}{4}GD^2$
2. See "Engineering data" on Page 012 for details of the terms.

Outline drawing SHD-2SH (Simple Unit Type)

You can download the CAD data (DXF) of this product from the following homepage.
URL: https://www.hds.co.jp/

Fig. 216-1

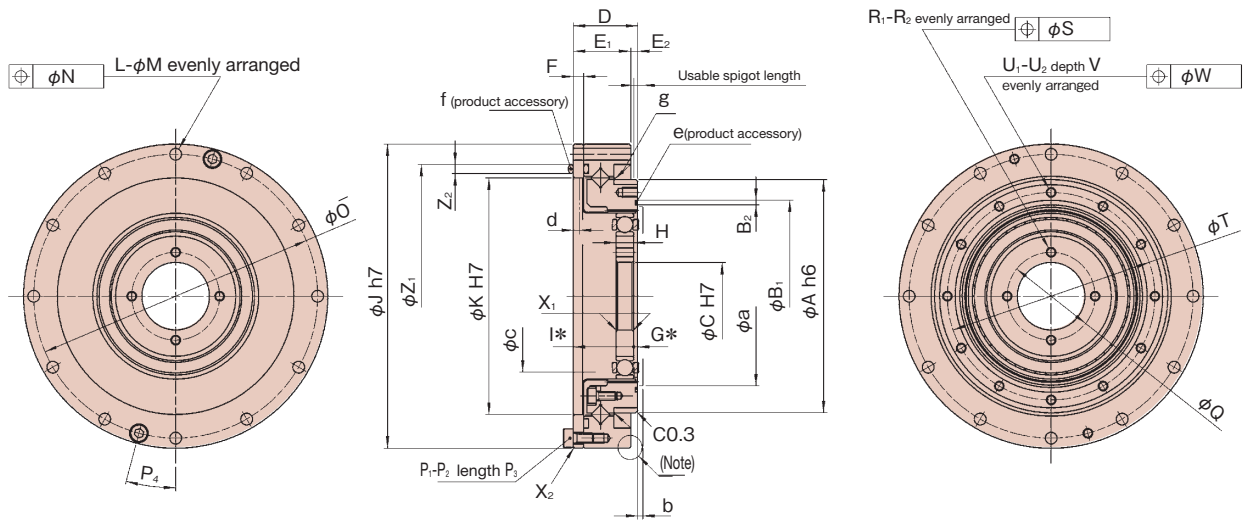

(Note)
See recessing of the mounting spigot on Page 231 for using the applicable part as the mounting spigot.
* Check the delivered specifications for details of the sizes.
* See Fig. 040-3 on Page 040 for the shapes of the wave generator.
* The allowance varies depending on the part manufacturing method (cast or machined products).
Contact us if the allowance is not described in the dimensions and is required.

Measurement table SHD-2SH (Simple Unit Type)

Table 217-1
Unit: mm

Symbol \ Model		14	17	20	25	32	40
	ϕA h6	$49^{0}_{-0.016}$	$59^{0}_{-0.019}$	$69^{0}_{-0.019}$	$84^{0}_{-0.022}$	$110^{0}_{-0.022}$	$132^{0}_{-0.025}$
	ϕB_1	$39.1^{+0.1}_{0}$	$48^{+0.1}_{0}$	$56.8^{+0.1}_{0}$	$70.5^{+0.1}_{0}$	$92^{+0.1}_{0}$	$112.4^{+0.1}_{0}$
	B_2	$0.8^{+0.15}_{0}$	$1.1^{+0.25}_{0}$	$1.4^{+0.25}_{0}$	$1.7^{+0.25}_{0}$	$2^{+0.25}_{0}$	$2.2^{+0.25}_{0}$
	ϕC H7	$11^{+0.018}_{0}$	$15^{+0.018}_{0}$	$20^{+0.021}_{0}$	$24^{+0.021}_{0}$	$32^{+0.025}_{0}$	$40^{+0.025}_{0}$
	D	$17.5_{\pm0.1}$	$18.5_{\pm0.1}$	$19_{\pm0.1}$	$22_{\pm0.1}$	$27.9_{\pm0.1}$	$33_{\pm0.1}$
	E_1	15.5	16.5	17	20	23.6	28
	E_2	2	2	2	2	4.3	5
	F	2.4	3	3	3.3	3.6	4
	G*	1.8	1.6	1.2	0.4	0.6	0.8
	H	$4^{0}_{-0.1}$	$5^{0}_{-0.1}$	$5.2^{0}_{-0.1}$	$6.3^{0}_{-0.1}$	$8.6^{0}_{-0.1}$	$10.3^{0}_{-0.1}$
	I*	$15.7^{0}_{-0.2}$	$16.9^{0}_{-0.2}$	$17.8^{0}_{-0.2}$	$21.6^{0}_{-0.2}$	$27.3^{0}_{-0.2}$	$32.2^{0}_{-0.2}$
	ϕJ h7	$70^{0}_{-0.030}$	$80^{0}_{-0.030}$	$90^{0}_{-0.035}$	$110^{0}_{-0.035}$	$142^{0}_{-0.040}$	$170^{0}_{-0.040}$
	ϕK H7	$50^{+0.025}_{0}$	$61^{+0.030}_{0}$	$71^{+0.030}_{0}$	$88^{+0.035}_{0}$	$114^{+0.035}_{0}$	$140^{+0.040}_{0}$
	L	8	12	12	12	12	12
	ϕM	3.5	3.5	3.5	4.5	5.5	6.6
	ϕN	0.25	0.25	0.25	0.25	0.25	0.3
	ϕO	64	74	84	102	132	158
	P_1	2	2	2	4	4	4
	P_2	M3	M3	M3	M3	M4	M4
	P_3	6	6	8	8	8	10
	P_4	22.5°	15°	15°	15°	15°	15°
	ϕQ	17	21	26	30	40	50
	R_1	4	4	4	4	4	4
	R_2	M3	M3	M3	M3	M4	M5
	ϕS	0.25	0.25	0.25	0.25	0.25	0.25
	ϕT	43	52	61.4	76	99	120
	U_1	8	12	12	12	12	12
	U_2	M3	M3	M3	M4	M5	M6
	V	4.5	4.5	4.5	6	8	9
	ϕW	0.25	0.25	0.25	0.25	0.25	0.3
	X_1	C0.4	C0.4	C0.5	C0.5	C0.5	C0.5
	X_2	C0.4	C0.4	C0.5	C0.5	C0.5	C0.5
	Z_1	$57^{+0.1}_{0}$	$68.1^{+0.1}_{0}$	$78^{+0.1}_{0}$	$94.8^{+0.1}_{0}$	$123^{+0.1}_{0}$	$148^{+0.1}_{0}$
	Z_2	$2^{+0.25}_{0}$	$2^{+0.25}_{0}$	$2.7^{+0.25}_{0}$	$2.4^{+0.25}_{0}$	$2.7^{+0.25}_{0}$	$2.7^{+0.25}_{0}$
Inner wall of the case	ϕa	36.5	45	53	66	86	106
	b	1	1	1.5	1.5	2	2.5
	ϕc	31	38	45	56	73	90
	d	1.4	1.8	1.7	1.8	1.8	1.8
	e	d37.1d0.6	d45.4d0.8	d53.28d0.99	d66.5d1.3	d87.5d1.5	d107.5d1.6
	f	d54.38d1.19	d64.0d1.5	d72.0d2.0	d88.62d1.78	d117.0d2.0	d142d2.0
	g	D49585	D59685	D69785	D84945	D1101226	D1321467
	h	1.5	1.5	1.5	1.5	3.3	4
	Mass (kg)	0.33	0.42	0.52	0.91	1.87	3.09

- You can change and add the following sizes.

Wave Generator:	C size
Flexspline:	O and P size
Circular Spline:	X_1 and X_2 size

- The G and I sizes indicated by an asterisk are the mounting positions in the shaft direction and allowance of the three parts (wave generator, flexspline, circular spline) comprising HarmonicDrive®. Strictly observe these sizes as they affect the performance and intensity.
- As the flexspline is subject to elastic deformation, the inner wall should be ϕa, b, ϕc or more and it should not exceed d size to prevent possible contact with the case.
- Wave generator is removed when the product is delivered.

Outline drawing SHD-2UH (Unit type)

Fig. 218-1

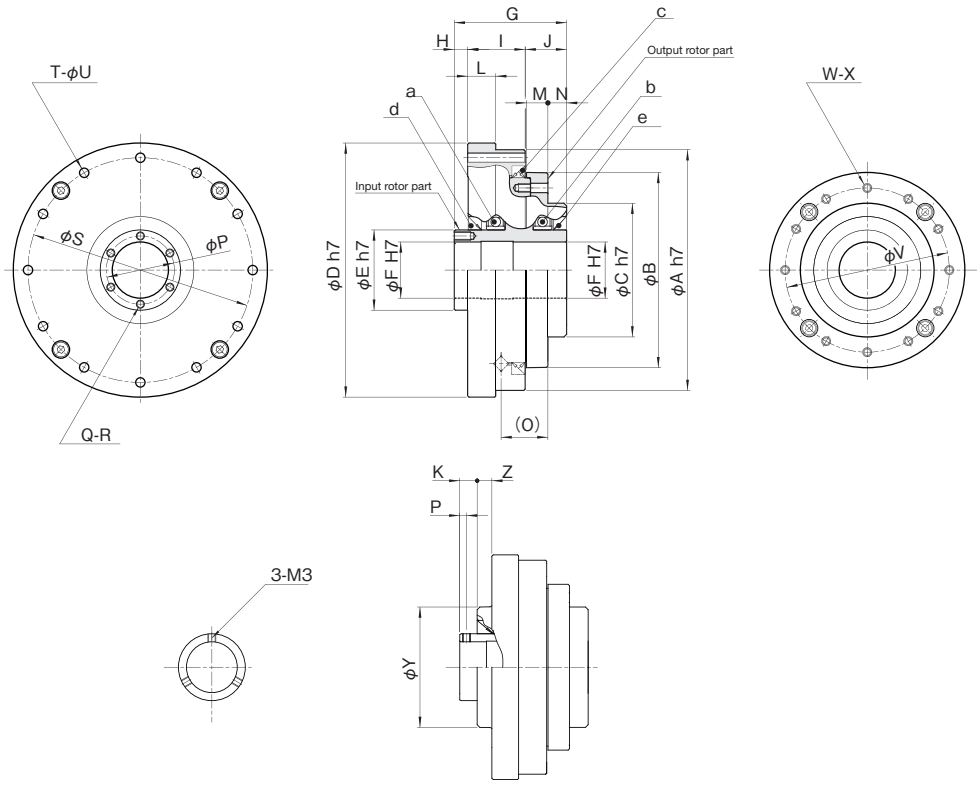

Shape of input part for model14 and 17

Measurement table SHD-2UH (Unit type)

Table 218-1
Unit: mm

Symbol \ Model	14	17	20	25	32	40
ϕA h7	70	80	90	110	142	170
ϕB	52	62	73	87	114	137
ϕC h7	36	45	50	60	75	100
ϕD h7	74	84	95	115	147	175
ϕE h7	20	25	30	38	54	64
ϕF H7	14	19	21	29	41	51
G	45.5	48	42	46.5	55	65
H	12	12	5	6	7	8
I	19.5	20.5	21.5	24	28.6	33
J	14	15.5	15.5	16.5	19.4	24
K	6.5	6.5	—	—	—	—
L	9	10	10.5	10.5	12	14
M	7	8	8	10	11	14
N	6.5	7	7	6	7.5	9
O	16.6	18	17.5	20.6	24.9	29.5
ϕP (P)	(2.5)	(2.5)	25.5	33.5	48	57
Q	3	3	6	6	6	6
R	M3	M3	M3×6	M3×6	M3×6	M4×8
ϕS	64	74	84	102	132	158
T	8	12	12	12	12	12
ϕU	3.5	3.5	3.5	4.5	5.5	6.6
ϕV	43	52	61.4	76	99	120
W	8	12	12	12	12	12
X	M3×4.5	M3×4.5	M3×4.5	M4×6	M5×8	M6×9
	ϕ3.5×5.5	ϕ3.5×6.5	ϕ3.5×6.5	ϕ4.5×8.5	ϕ5.5×7.6	ϕ6.6×10
ϕY	36	45	—	—	—	—
Z	5.5	5.5	—	—	—	—
a	6804ZZ	6805ZZ	6806ZZ	6808ZZ	6811ZZ	6813ZZ
b	6804ZZ	6805ZZ	6806ZZ	6808ZZ	6810ZZ	6813ZZ
c	D49585	D59685	D69785	D84945	D1101226	D1321467
d	S20304.5	S25356	S30405	S38475	S54645	S64745
e	S20304.5	S25356	S30405	S38475	S50605	S64745
Mass (kg)	0.49	0.66	0.84	1.4	2.7	4.6

Angle transmission accuracy

See “Engineering data” for a description of terms.

Table 219-1
Unit: $\times 10^{-4}$rad (arc-min)

Model		14	17	20	25	32	40
Angle transmission error	$\times 10^{-4}$rad	4.4	4.4	2.9	2.9	2.9	2.9
	arc-min	1.5	1.5	1.0	1.0	1.0	1.0

Hysteresis loss

See “Engineering data” for a description of terms.

Table 219-2

Reduction ratio \ Model		14	17	20	25	32	40
50	$\times 10^{-4}$rad	7.3	5.8	5.8	5.8	5.8	5.8
	arc-min	2.5	2.0	2.0	2.0	2.0	2.0
80 or more	$\times 10^{-4}$rad	5.8	2.9	2.9	2.9	2.9	2.9
	arc-min	2.0	1.0	1.0	1.0	1.0	1.0

Rigidity (Spring constant)

See “Engineering data” for a description of terms.

Table 219-3

Symbol \ Model			14	17	20	25	32	40
	T_1	N·m	2.0	3.9	7.0	14	29	54
		kgf·m	0.2	0.4	0.7	1.4	3.0	5.5
	T_2	N·m	6.9	12	25	48	108	196
		kgf·m	0.7	1.2	2.5	4.9	11	20
Reduction ratio 50	K_1	$\times 10^4$N·m/rad	0.29	0.67	1.1	2.0	4.7	8.8
		kgf·m/arc-min	0.085	0.2	0.32	0.6	1.4	2.6
	K_2	$\times 10^4$N·m/rad	0.37	0.88	1.3	2.7	6.1	11
		kgf·m/arc-min	0.11	0.26	0.4	0.8	1.8	3.4
	K_3	$\times 10^4$N·m/rad	0.47	1.2	2.0	3.7	8.4	15
		kgf·m/arc-min	0.14	0.34	0.6	1.1	2.5	4.5
	θ_1	$\times 10^{-4}$rad	6.9	5.8	6.4	7.0	6.2	6.1
		arc-min	2.4	2.0	2.2	2.3	2.1	2.1
	θ_2	$\times 10^{-4}$rad	19	14	19	18	18	18
		arc-min	6.4	4.6	6.3	6.1	6.1	5.9
Reduction ratio 80 or more	K_1	$\times 10^4$N·m/rad	0.4	0.84	1.3	2.7	6.1	11
		kgf·m/arc-min	0.12	0.25	0.4	0.8	1.8	3.2
	K_2	$\times 10^4$N·m/rad	0.44	0.94	1.7	3.7	7.8	14
		kgf·m/arc-min	0.13	0.28	0.5	1.1	2.3	4.2
	K_3	$\times 10^4$N·m/rad	0.61	1.3	2.5	4.7	11	20
		kgf·m/arc-min	0.18	0.39	0.75	1.4	3.3	5.8
	θ_1	$\times 10^{-4}$rad	5.0	4.6	5.4	5.2	4.8	4.9
		arc-min	1.7	1.6	1.8	1.8	1.7	1.7
	θ_2	$\times 10^{-4}$rad	16	13	15	13	14	14
		arc-min	5.4	4.3	5.0	4.5	4.8	4.8

* The values in this table are reference values. The lower-limit value is approximately 80% of the displayed value.

Simple unit type (2SH) Starting torque

See "Engineering data" for a description of terms. As the values in the table below vary depending on the use conditions, use them as reference values.

Table 220-1
Unit: cN·m

Reduction ratio \ Model	14	17	20	25	32	40
50	6.2	19	25	39	60	95
80	5.0	16	23	36	55	83
100	4.8	17	22	34	50	78
120	—	13	22	34	48	77
160	—	—	22	33	47	74

Unit type (2UH) Starting torque

See "Engineering data" for a description of terms. As the values in the table below vary depending on the use conditions, use them as reference values.

Table 220-2
Unit: cN·m

Reduction ratio \ Model	14	17	20	25	32	40
50	11	39	53	79	114	177
80	9.0	34	44	66	108	175
100	8.7	37	49	73	101	157
120	—	34	49	73	99	155
160	—	—	48	72	97	151

Simple unit type (2SH) Overdrive starting torque

See "Engineering data" for a description of terms. As the values in the table below vary depending on the use conditions, use them as reference values.

Table 220-3
Unit: N·m

Reduction ratio \ Model	14	17	20	25	32	40
50	3.7	11	15	24	36	57
80	4.3	15	21	32	46	72
100	5.8	21	27	41	60	94
120	—	28	33	51	68	113
160	—	—	42	64	91	143

Unit type (2UH) Overdrive starting torque

See "Engineering data" for a description of terms. As the values in the table below vary depending on the use conditions, use them as reference values.

Table 220-4
Unit: N·m

Reduction ratio \ Model	14	17	20	25	32	40
50	6	21	29	44	63	98
80	7.1	28	41	60	84	130
100	9.7	41	54	80	111	173
120	—	51	65	99	126	208
160	—	—	84	126	171	266

Ratcheting torque

See "Engineering data" for a description of terms.

Table 220-5
Unit: N·m

Reduction ratio \ Model	14	17	20	25	32	40
50	88	150	220	450	980	1800
80	110	200	350	680	1400	2800
100	84	160	260	500	1000	2100
120	—	120	240	470	980	1900
160	—	—	220	450	980	1800

Buckling torque

See "Engineering data" for a description of terms.

Table 220-6
Unit: N·m

Model	14	17	20	25	32	40
All Ratios	130	260	470	850	1800	3600

On no-load running torque

No-load running torque means the torque on the input side (high-speed shaft side) required to put HarmonicDrive® under a no-load condition.

Measuring condition

Table 221-1

Reduction ratio 100			
Lubrication condition	Grease lubrication	Name	Harmonic grease® SK-1A (model 20 or more)
			Harmonic grease® SK-2 (model 14, 17)
		Application qty.	Appropriate application qty. (See page 229)
The torque value is the value after a trial run for two hours or longer at an input of 2000 r/min.			

■Correction quantity by reduction

The no-load running torque of HarmonicDrive® varies depending on the reduction ratio. Graphs 222-1 to 223-4 show the values for a reduction ratio of 100. Obtain other reduction ratios by adding the correction quantity shown in the right-hand table (Table 221-2, 3).

Correction quantity for the no-load running torque

Table 221-2
Unit: cN·m

■SHD-2SH

Model \ Reduction ratio	50	80	120	160
14	+1.0	+0.2	—	—
17	+1.6	+0.3	-0.2	—
20	+2.4	+0.5	-0.3	-0.7
25	+4.0	+0.8	-0.5	-1.2
32	+7.0	+1.4	-1.0	-2.4
40	+13	+2.4	-1.7	-3.9

Table 221-3
Unit: cN·m

■SHD-2UH

Model \ Reduction ratio	50	80	120	160
14	+1.0	+0.2	—	—
17	+1.6	+0.3	-0.2	—
20	+2.4	+0.5	-0.3	-0.7
25	+4.0	+0.8	-0.5	-1.2
32	+7.0	+1.4	-1.0	-2.4
40	+13	+2.4	-1.7	-3.9

■Temperature range of the operating environment

Table 221-4

Grease	SK-1A	0°C to + 40°C
	SK-2	0°C to + 40°C

* Keep the hot section up to 40°C above the ambient temperature.

■No-load running torque for a reduction ratio of 100

■SHD-2SH (Simple unit type)

Input rotational speed: 500r/min

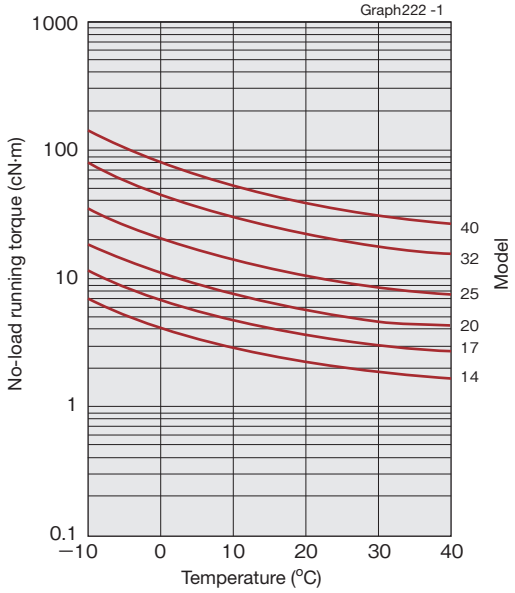

Input rotational speed: 1000r/min

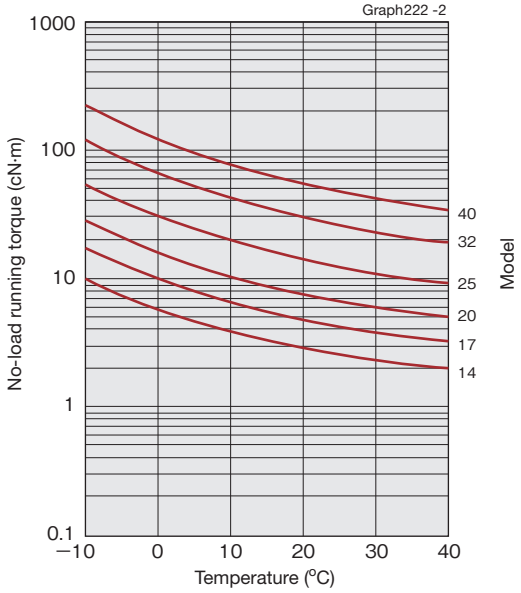

Input rotational speed: 2000r/min

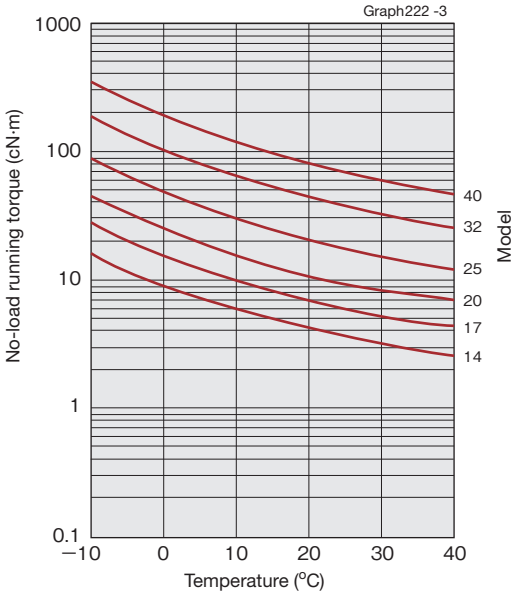

Input rotational speed: 3500r/min

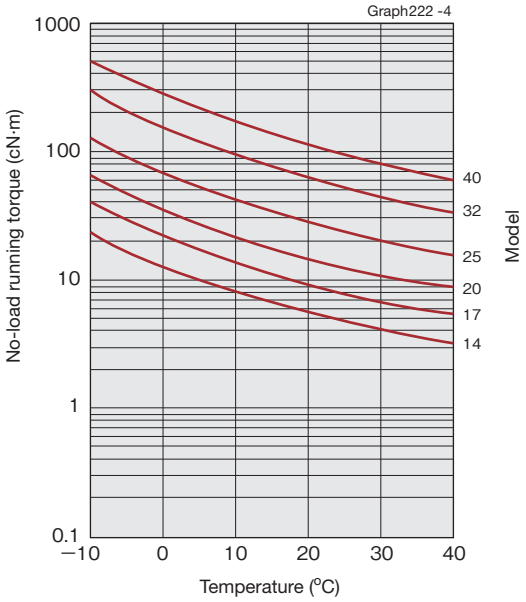

*The values in this graph are average values ($\bar{X}$).

■SHD-2UH (Unit type)

Input rotational speed: 500r/min

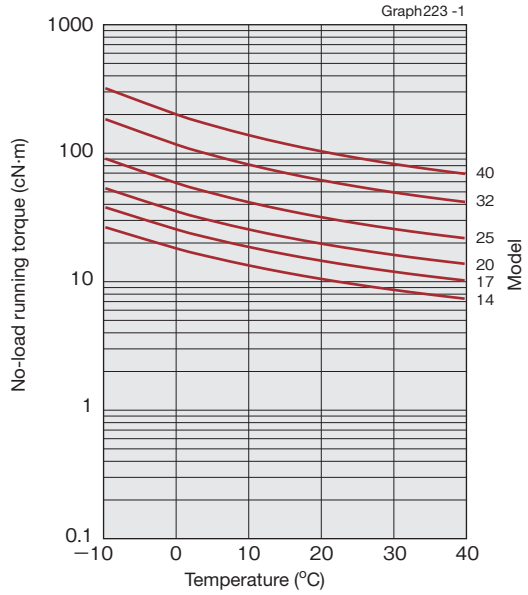

Input rotational speed: 1000r/min

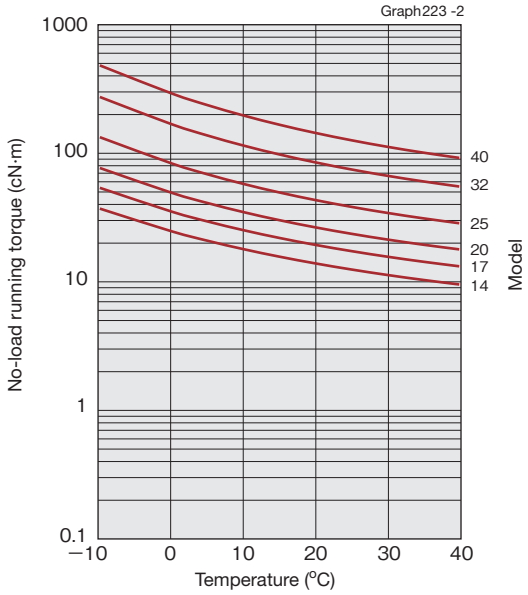

Input rotational speed: 2000r/min

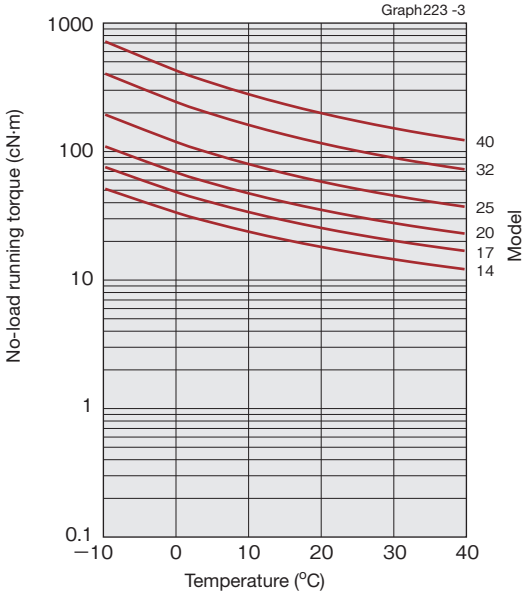

Input rotational speed: 3500r/min

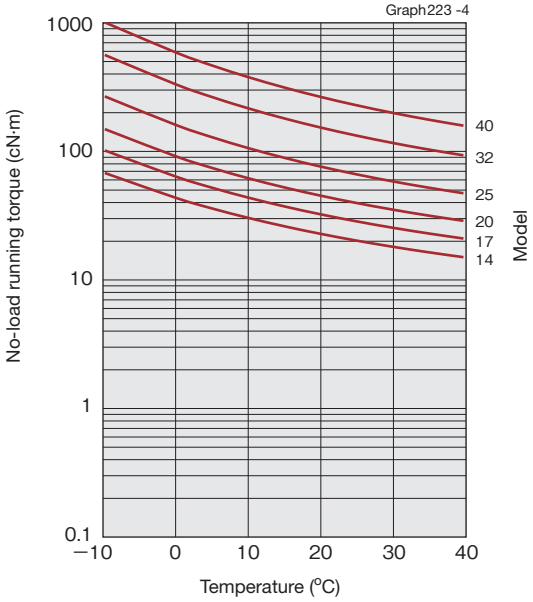

*The values in this graph are average values ($\bar{X}$).

SHD-2SH (Simple unit type) Efficiency characteristics

The efficiency varies depending on the following conditions.

- ■Reduction ratio
- ■Input rotational speed
- ■Load torque
- ■Temperature
- ■Lubrication condition (Type of lubricant and the quantity)

■Measuring condition

Table 224-1

Built-in	Measurement by building the recommended built-in precision into the product		
Load torque	Rated torque in rating table		
Lubricating condition	Grease lubrication	Name	Harmonic grease® SK-1A (Model 20 or more)
			Harmonic grease® SK-2 (Model 14 and 17)
		Application qty.	Appropriate application quantity

■Efficiency correction coefficient and efficiency correction amount

■Efficiency correction calculation formula

To determine efficiency due to “efficiency correction coefficient due to load torque” and “efficiency correction amount due to model No.”, use formula 224-1.

Calculation formula

Formula 224 -1

Efficiency $\eta = Ke \times (\eta_R + \eta e)$

Symbols of the calculation formula

Table224 -2

η	Efficiency	
Ke	Efficiency correction coefficient	Graph 224-1
η_R	Efficiency at rated torque	Graphs 225-1 to 225-5
ηe	Efficiency correction amount	Table 224-3

■Efficiency correction coefficient due to load torque

When load torque is lower than rated torque, efficiency drops. Determine the correction coefficient Ke in Graph 224-1, and then refer to the efficiency correction calculation formula to determine efficiency.

Efficiency correction coefficient

Graph224 -1

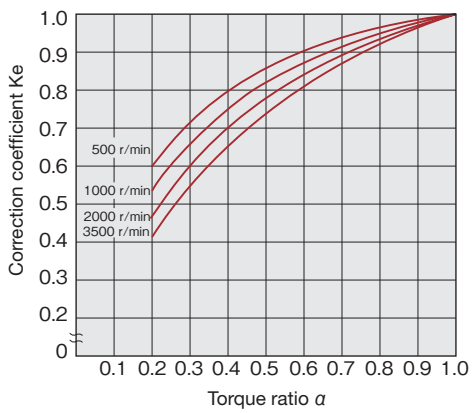

* When the load torque is higher than the rated torque, efficiency correction value Ke is 1.

■Efficiency correction amount by model No.

With the SHD-2SH, input-side support bearings and oil seal are attached. The effect of these varies depending on the model number.

Use Table 224-3 to determine the correction amount (ηe) for efficiency at rated torque for each model number.

Efficiency correction amount by model No.

Table224 -3

Unit: %

Model \ Reduction ratio	50	80	100	120	160
14	0.0	3.1	0.0	—	—
17	2.4	1.9	0.0	-2.6	—
20	2.1	2.1	1.6	-0.9	1.3
25	-0.7	1.6	-0.3	-2.9	-0.8
32	-1.9	2.0	-1.1	-3.7	-1.6
40	-1.9	-1.2	-0.2	-1.1	0.9

■Efficiency at rated torque

Reduction ratio 50

Model No. 14

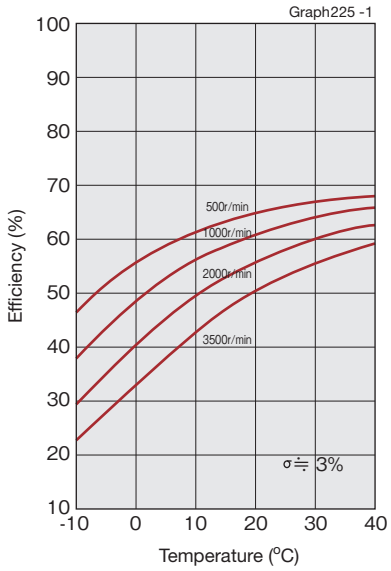

Model No. 17, 20, 25, 32, 40

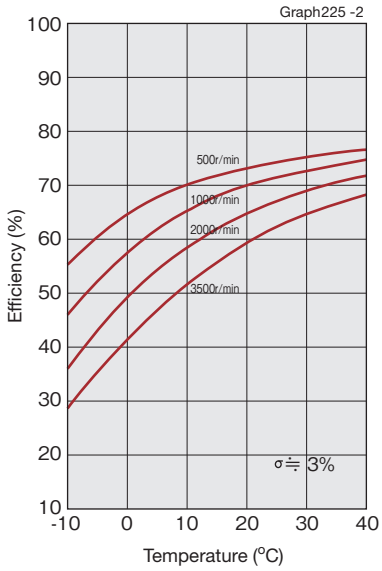

Reduction ratio 80, 100, 120

Model No. 14

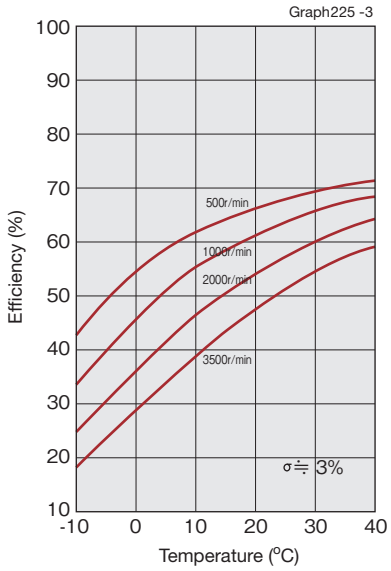

Model No. 17, 20, 25, 32, 40

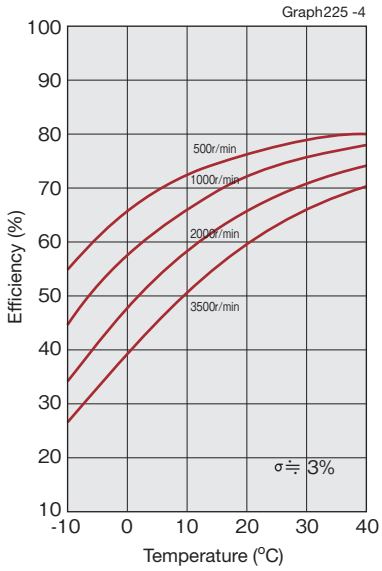

Reduction ratio 160

Model No. 20, 25, 32, 40

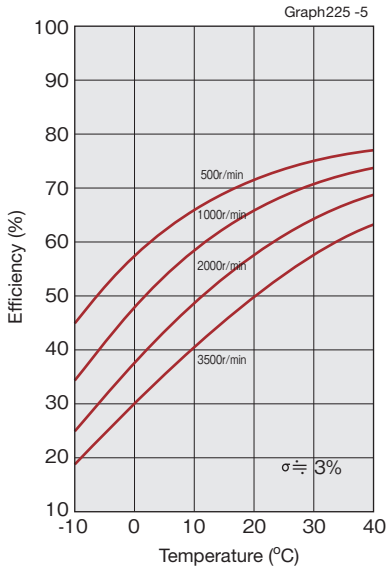

SHD-2UH (Unit type) Efficiency characteristics

The efficiency varies depending on the following conditions.

- ■Reduction ratio
- ■Input rotational speed
- ■Load torque
- ■Temperature
- ■Lubrication condition (Type of lubricant and the quantity)

■Measuring condition

Table 226-1

Built-in	Measurement by building the recommended built-in precision into the product		
Load torque	Rated torque in rating table		
Lubricating condition	Grease lubrication	Name	Harmonic grease® SK-1A (Model 20 or more)
			Harmonic grease® SK-2 (Model 14 and 17)
		Application qty.	Appropriate application quantity

■Efficiency correction coefficient and efficiency correction amount

■Efficiency correction calculation formula

To determine efficiency due to “efficiency correction coefficient due to load torque” and “efficiency correction amount due to model No.”, use formula 226-1.

Calculation formula

Formula 226 -1

Efficiency $\eta = Ke \times (\eta_R + \eta e)$

Symbols of the calculation formula

Table226 -2

η	Efficiency	
Ke	Efficiency correction coefficient	Graph 226-1
η_R	Efficiency at rated torque	Graphs 227-1 to 227-5
ηe	Efficiency correction amount	Table 226-3

■Efficiency correction coefficient due to load torque

When load torque is lower than rated torque, efficiency drops. Determine the correction coefficient Ke in Graph 226-1, and then refer to the efficiency correction calculation formula to determine efficiency.

Efficiency correction coefficient

Graph226 -1

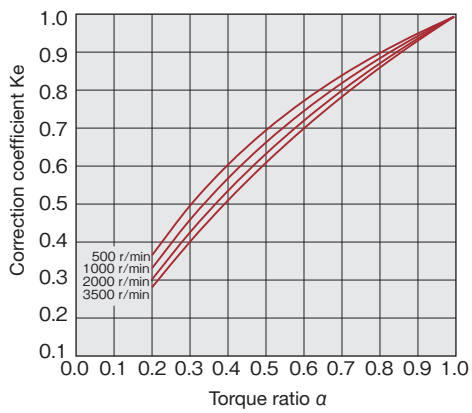

* When the load torque is higher than the rated torque, efficiency correction value Ke is 1.

■Efficiency correction amount by model No.

With the SHD-2UH, input-side support bearings and oil seal are attached. The effect of these varies depending on the model number.

Use Table 226-3 to determine the correction amount (ηe) for efficiency at rated torque for each model number.

Efficiency correction amount by model No.

Table226 -3

Unit: %

Model \ Reduction ratio	50	80	100	120	160
14	0.0	3.1	0.0	—	—
17	-1.0	-1.5	-3.9	-6.8	—
20	1.2	1.4	0.4	-2.5	-1.2
25	-0.2	2.7	0.1	-2.9	-1.3
32	-0.1	2.0	0.9	-2.0	-0.4
40	0.3	1.7	2.4	1.4	2.8

■Efficiency at rated torque

Reduction ratio 50
Model No. 14

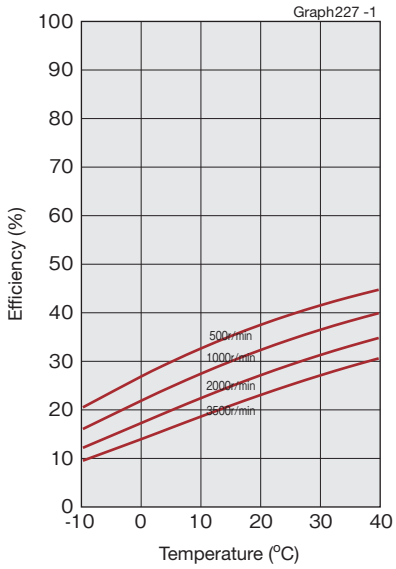

Reduction ratio 80, 100, 120
Model No. 14

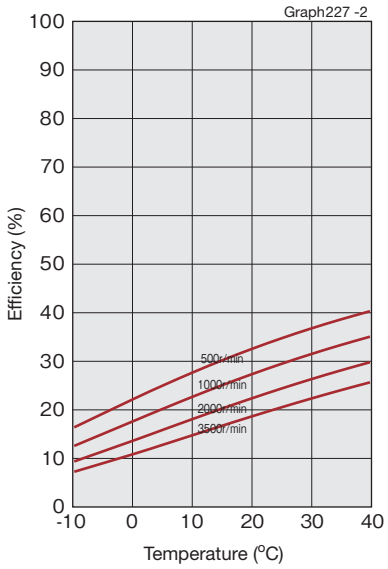

Reduction ratio 50
Model No. 17, 20, 25, 32, 40

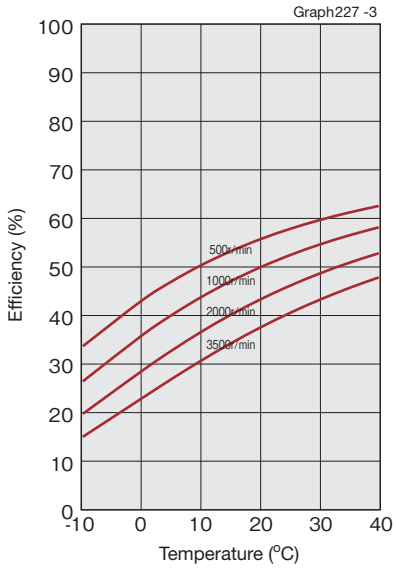

Reduction ratio 80, 100, 120
Model No. 17, 20, 25, 32, 40

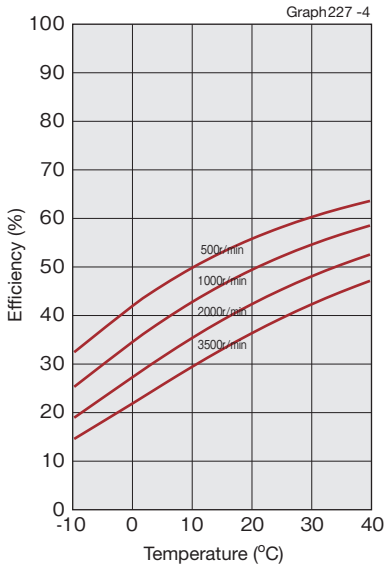

Reduction ratio 160
Model No. 17, 20, 25, 32, 40

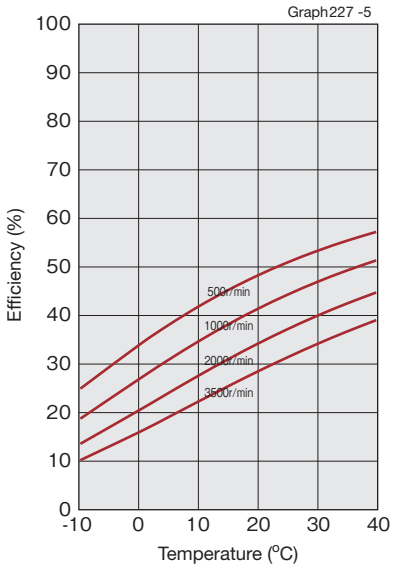

Specification of the main roller bearing

A precision cross roller bearing is built in the unit type to directly support the external load (output flange).
Check the maximum load moment load, life of the cross roller bearing and static safety coefficient to fully bring out the performance of the unit type.
See the page 030 to 034 of “Engineering data” for each calculation formula.

■Checking procedure

(1) Checking the maximum load moment load (M*max*)

Obtain the maximum load moment load (M*max*). → Maximum load moment load (M*max*) ≦ permissible moment (Mc)

(2) Checking the life

Obtain the average radial load (Fr*av*) and the average axial load (Fa*av*). → Obtain the radial load coefficient (x) and the axial load coefficient (y). → Calculate the life and check it.

(3) Checking the static safety coefficient

Obtain the static equivalent radial load coefficient (Po). → Check the static safety coefficient. (fs)

■Main roller bearing specifications

The specifications of the cross roller are shown in Table 228-1.

Specifications

Table 228-1

Model	Pitch circle dia. of a roller	Offset amount	Basic rated load				Permissible moment load Mc		Moment rigidity Km	
	dp	R	Basic dynamic rated load C		Basic static rated load Co					
	m	m	$\times10^2$N	kgf	$\times10^2$N	kgf	N·m	kgf·m	$\times10^4$ N·m/rad	kgf·m/arc-min
14	0.0503	0.0111	29	296	43	438	37	3.8	7.08	2.1
17	0.061	0.0115	52	530	81	826	62	6.3	12.7	3.8
20	0.070	0.011	73	744	110	1122	93	9.5	21	6.2
25	0.086	0.0121	109	1111	179	1825	129	13.2	31	9.2
32	0.112	0.0173	191	1948	327	3334	290	29.6	82.1	24.4
40	0.133	0.0195	216	2203	408	4160	424	43.2	145	43.0

(Note) * The basic dynamic rated load means a certain static radial load so that the basic dynamic rated life of the roller bearing is one million rotations.
* The basic static rated load means a static load that gives a certain level of contact stress (4 kN/mm^2) in the center of the contact area between the rolling element receiving the maximum load and the orbit.
* Permissible moment load means the maximum moment load that may be applied to the output shaft. Within this range, the basic performance is secured and the operation can be performed.
* The value of the moment rigidity is the reference value. The lower-limit value is approximately 80% of the displayed value.
* Permissible axial load or permissible radial load is the value that satisfies the reducer life when either a genuine radial load or an axial load is applied to the main shaft. (When radial load is Lr+R=0mm, and axial load is La=0mm)

Simple unit type (2SH) Design guide

Installation precision

Unreasonable and abnormal installation that may deform the mounting surface may lower the performance depending on the installation design.
Pay attention to the following points and maintain the recommended precision of the installation cases shown in Figure 229-1 and Table 229-1 to make a design assuring no oil leakage.

- Warp and deformation on the mounting surface
- Blocking of foreign matter
- Problems caused by burrs, embossment and location around the tap area of the mounting hole
- Insufficient chamfering on the mounting faucet joint
- Insufficient roundness on the mounting faucet joint

Recommended precision for the built-in case

Fig. 229-1

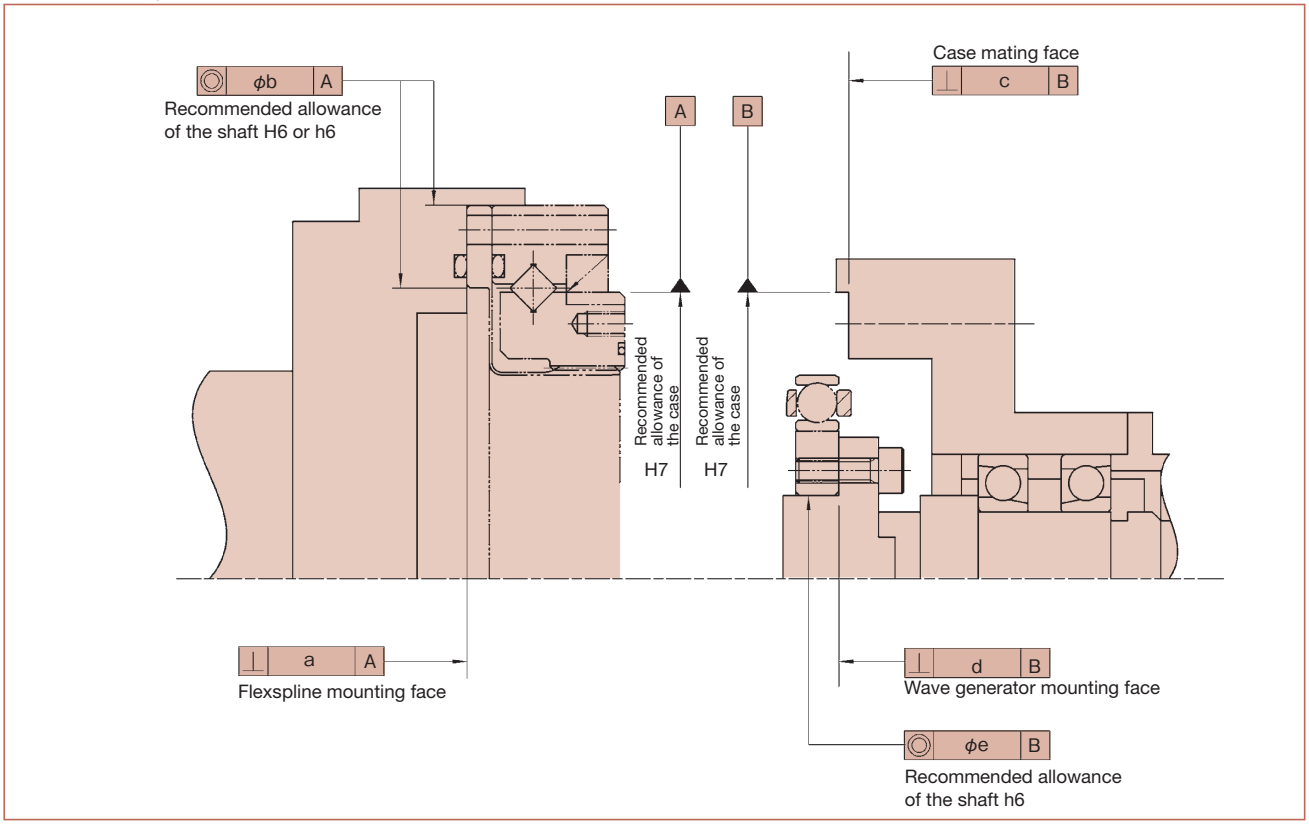

Recommended precision for the built-in case

Table 229-1
Unit: mm

Symbol \ Model	14	17	20	25	32	40
a	0.016	0.021	0.027	0.035	0.042	0.048
ϕb	0.015	0.018	0.019	0.022	0.022	0.024
c	0.011	0.012	0.013	0.014	0.016	0.016
d	0.008	0.010	0.012	0.012	0.012	0.012
ϕe	0.016	0.018	0.019	0.022	0.022	0.024

SHD-2SH series Recommended size of O-ring groove

Fig. 229-2

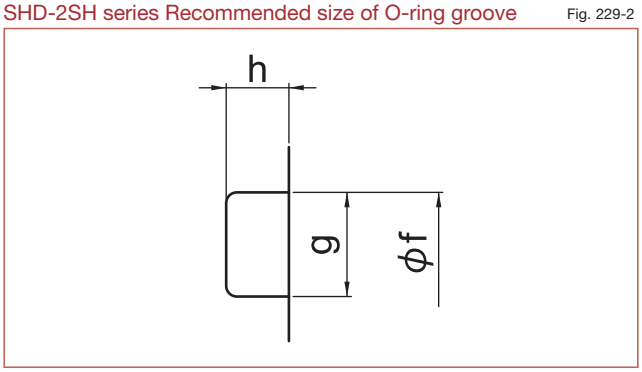

Recommended size of O-ring groove

Table 229-2
Unit: mm

Model	ϕf		g		h		O-ring (provided with product)
14	57	+0.1/0	2	+0.25/0	1.1	0/-0.1	54.38 × 1.19
17	68.1	+0.1/0	2	+0.25/0	1.1	0/-0.1	64.0 × 1.5
20	78	+0.1/0	2.7	+0.25/0	1.5	0/-0.1	72.0 × 2.0
25	94.8	+0.1/0	2.4	+0.25/0	1.35	0/-0.1	88.62 × 1.78
32	123	+0.1/0	2.7	+0.25/0	1.5	0/-0.1	117.0 × 2.0
40	148	+0.1/0	2.7	+0.25/0	1.5	0/-0.1	142.0 × 2.0

Unit type (2UH) Design guide

Output part and fixed part

The output part of the SHD series varies depending on where it is to be fixed. The reduction ratio and the rotational direction also change. The relation is shown below.

Table 230-1

Fixed part	Output part	Rotational direction and reduction ratio
(A) side	(B) side	(2) on page 011
(B) side	(A) side	(1) on page 011

Fig. 230-1

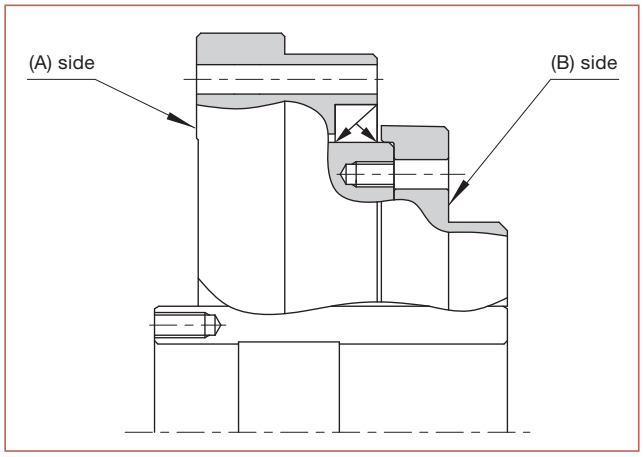

Installation and transmission torque

Installation and transmission torque on (A) side

Table 230-2

Item \ Model		14	17	20	25	32	40
Number of bolts		8	12	12	12	12	12
Bolt size		M3	M3	M3	M4	M5	M6
Installation of bolts: P.C.D.	mm	64	74	84	102	132	158
Bolt tightening torque	N·m	2.0	2.0	2.0	4.5	9.0	15.3
	kgf·m	0.20	0.20	0.20	0.46	0.92	1.56
Bolt transmiss-ion torque	N·m	108	186	210	431	892	1509
	kgf·m	11	19	21	44	91	154

(Note) 1. It is assumed that the material of the female screws can endure the bolt tightening torque.
2. Recommended bolt Bolt name: JIS B 1176 hexagonal bolt Intensity type: JIS B 1051 12.9 or more
3. Torque efficiency: K=0.2
4. Tightening efficiency: A=1.4
5. Tightening friction coefficient μ=0.15

Installation and transmission torque on (B) side

Table 230-3

Item \ Model		14	17	20	25	32	40
Number of bolts		8	12	12	12	12	12
Bolt size		M3	M3	M3	M4	M5	M6
Installation of bolts: P.C.D.	mm	43	52	61.4	76	99	120
Effective depth of screw part	mm	4.5	4.5	4.5	6	8	9
Bolt tightening torque	N·m	2.0	2.0	2.0	4.5	9.0	15.3
	kgf·m	0.20	0.20	0.20	0.46	0.92	1.56
Bolt transmiss-ion torque	N·m	72	130	154	321	668	1148
	kgf·m	7.3	13.3	15.7	32.7	68.2	117

(Note) 1. It is assumed that the material of the female screws can endure the bolt tightening torque.
2. Recommended bolt Bolt name: JIS B 1176 hexagonal bolt Intensity type: JIS B 1051 12.9 or more
3. Torque efficiency: K=0.2
4. Tightening efficiency: A=1.4
5. Tightening friction coefficient μ=0.15

* Since the flange material on the case side is AL (aluminum), be sure to tighten the bolt to the specified torque as described above. If the tightening torque exceeds the above value, the correct transmission torque may not be secured or the bolt may be loosened. Use washers instead of putting the aluminum directly on the bolt-bearing surface when tightening with the bolt from the (A) side.

Recessing of the mounting spigot

Recess the other side to use Portion A in the following figure as a mounting spigot.

Mounting spigot part — Fig. 231-1

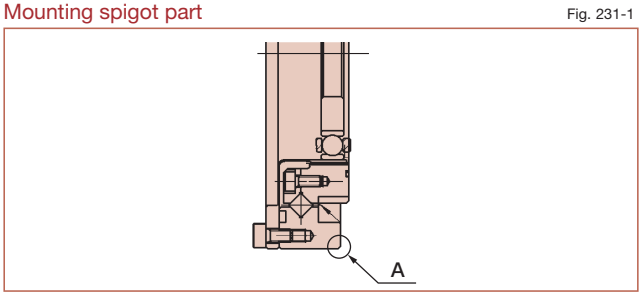

Recommended recessing size on the other side of installation — Fig. 231-2

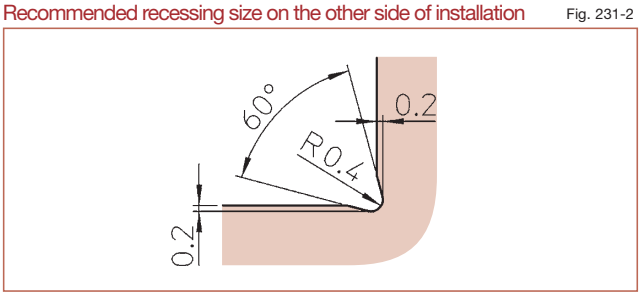

Thrust force of the wave generator

Thrust force is applied on the wave generator during operation due to elastic deformation of the flexspline of HarmonicDrive®. The thrust force used as a reducer ((1), (2) and (3) on Page 011) works in the diaphragm direction of the flexspline (Figure 231-3), while the thrust force used as an overdrive ((4), (5) and (6) on Page 011) works in the opposite direction (Figure 231-3).
You can obtain the thrust force (maximum value) of the wave generator with the following calculation formula. Thrust force varies depending on the operating condition. It tends to increase and shows almost the same value as that obtained by the calculation formula when the torque is high, when the speed is very low and when the rotation is constant and continuous. Work out a design to eliminate the thrust force of the wave generator in either case.

(Note) Contact us when you fix the wave generator hub and the input shaft with a retaining screw.

Thrust force direction of the wave generator — Fig. 231-3

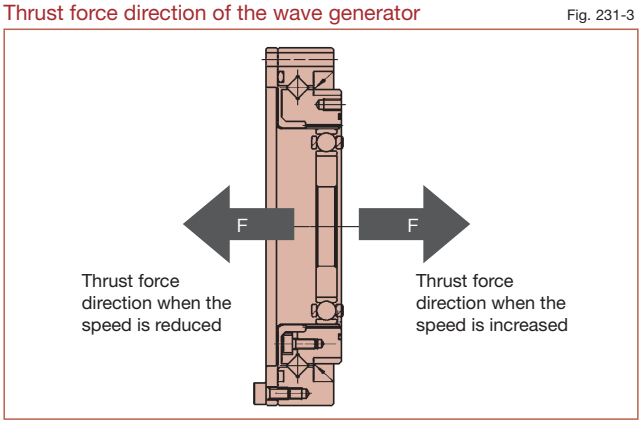

Calculation formula of thrust force — Table 231-1

Reduction ratio	Calculation formula
i =1/50	$F=2\times\frac{T}{D}\times0.07\times\tan 30°+2\mu PF$
i =1/100 or more	$F=2\times\frac{T}{D}\times0.07\times\tan 20°+2\mu PF$

Thrust force by bearing reaction force — Table 231-2

Model Name	Model Number	2μPF (N)
SHD	14	1.2
	17	3.3
	20	5.6
	25	9.3
	32	16
	40	24

Symbols of the calculation formula — Table 231-3

F	Thrust force	N	See Fig. 231-3.
D	(Model) ×0.00254	m	
T	Output torque	N·m	
2μPF	Thrust force by bearing reaction force	N	See Table 231-3.

Example of calculation — Formula 231-1

Model name : SHD
Model number : 32
Reduction ratio: i=1/50
Output torque : 200N·m

$$F=2\times\frac{200}{(32\times0.00254)}\times0.07\times\tan30°+16$$

F=215N

Lubrication

Standard lubrication for SHD series is grease lubrication. See “Engineering data” on Page 016 for details of the lubricant.

Recommended size for the inner wall of the case

Use the recommended size for the inner wall of the case of HarmonicDrive® so that grease does not fly away and remains inside HarmonicDrive® during operation. Contact us if you cannot secure the recommended size.

Recommended size for the inner wall of the case — Table 231-4 Unit: mm

Model / Symbol	14	17	20	25	32	40
φa	36.5	45	53	66	86	106
b	1 (3)	1 (3)	1.5 (4.5)	1.5 (4.5)	2 (6)	2.5 (7.5)
φc	31	38	45	56	73	90
d	1.4	1.8	1.7	1.8	1.8	1.8
e	1.5	1.5	1.5	1.5	3.3	4

(Note) The value in parenthesis is the value when the wave generator facing upward.

Recommended size for the inner wall of the case — Fig. 231-4

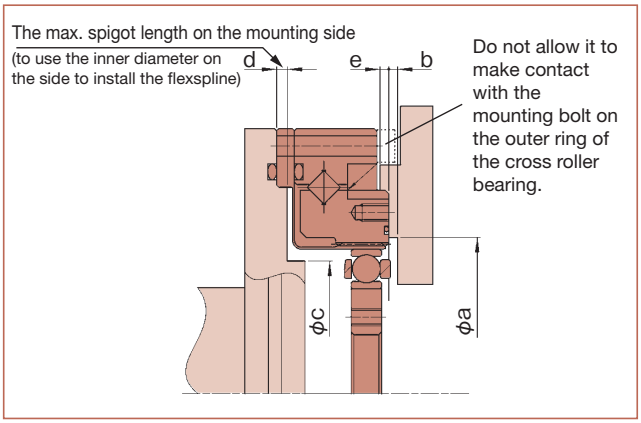

Application guide

As the SHD series is shipped with the outer ring of the cross roller and the flexspline temporarily bound, grease is applied to the tooth groove, the periphery of the flexspline and the tooth groove of the circular spline.

Application guide

Fig. 232-1

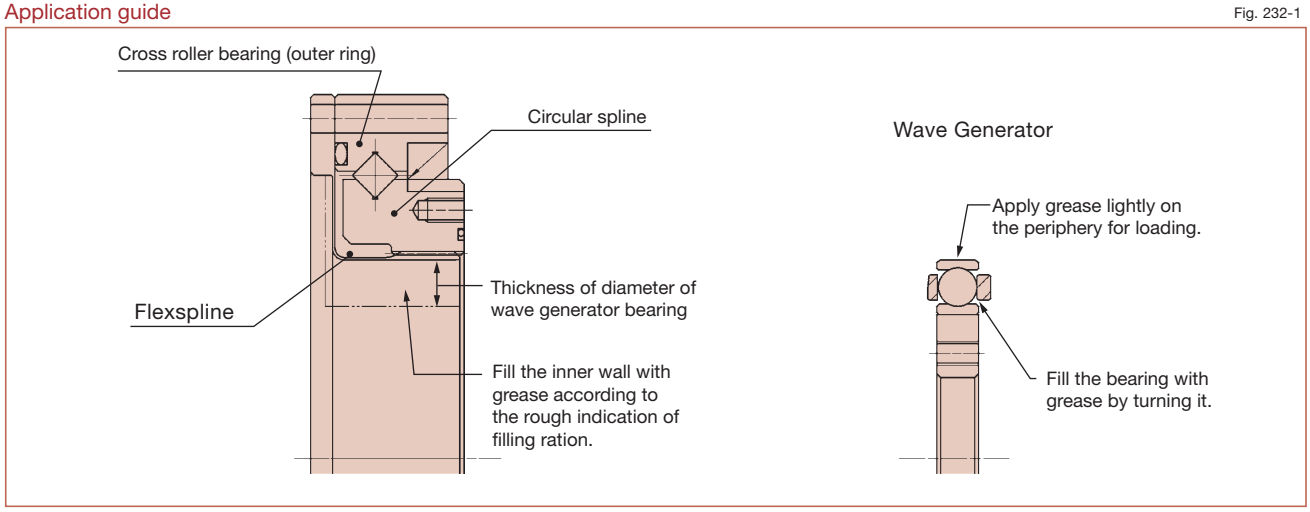

Application quantity

Table 232-1
Unit: g

Model	14	17	20	25	32	40
Application qty	5	9	13	24	51	99

When to replace grease

Abrasion of the sliding parts of HarmonicDrive® is influenced by grease performance. Grease performance changes by temperature and deteriorates rapidly as the temperature rises. Therefore, the grease needs to be replaced earlier than usual. The graph below indicates the time to replace the grease from the relation between the grease temperature and the total number of rotations when the average load torque is equal to or less than the rated torque. Obtain the time to replace the grease from the following calculation formula when the average load torque exceeds the rated torque.

Calculation formula when the average load torque exceeds the rated torque

Formula 232-1

$$L_{GT}=L_{GTn} \times \left(\frac{Tr}{T_{av}}\right)^3$$

Symbols of the calculation formula

Table 232-2

L_{GT}	Replacement timing if it is equal to rated torque or more	Number of rotation	————
L_{GTn}	Replacement timing if it is equal to rated torque or less	Number of rotation	See Graph on the left.
Tr	Rated torque	N·m, kgf·m	See the "Rating table" on Page 216.
T_{av}	Average load torque on the output side		Calculation formula: See Page 014.

When to replace grease: L_{GTn} (when the average load torque is equal to or less than the rated torque)

Graph 232-1

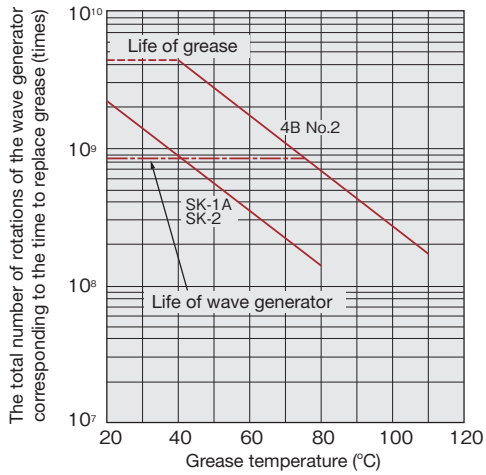

* Life of wave generator indicates the 10% of damage possibility.

■Other precautions

1. Avoid using it with other grease. HarmonicDrive® should be placed in an independent case to be built into the equipment.

2. When you use HarmonicDrive® with the wave generator facing upward (see Figure 050-2 on Page 050) at low-speed rotation (input rotational speed: 1000 r/min or less) and in one direction, you should contact our branch office as it may cause lubrication problems.

3. Fill the gap between the wave generator and the input cover (motor flange) with grease to use the wave generator facing upward or downward (see Figure 094-2 on Page 094).

Precautions on installation

■Installation sequence

Install the wave generator after setting the circular spline and the flexspline on the equipment. Installing the generator in other ways may cause a (dedoi-dal) condition (see Page 029) and damage the tooth plane. Take extra care.

Appropriate installation sequence

Fig. 233-1

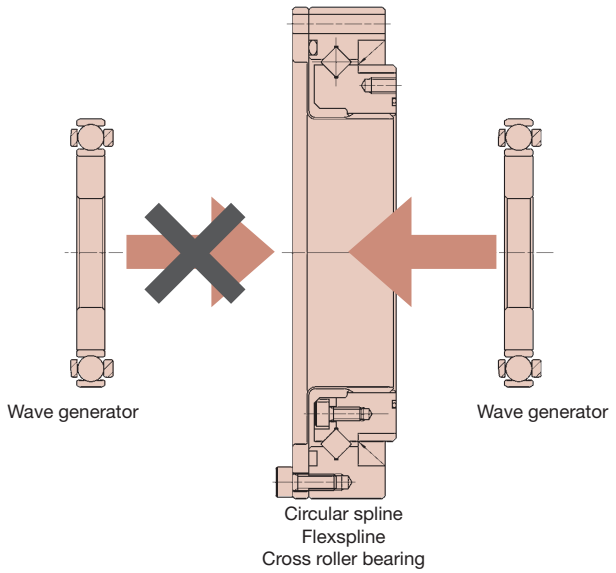

(Note)
You may not build in the wave generator from the diaphragm side of flexspline.

■Precautions on assembly

HarmonicDrive® may generate vibration and abnormal sound due to problems during assembly. Perform assembly based on the following precautions.

Precautions on the wave generator

1. Avoid such assembly where excessive force is applied to the wave generator bearing. You can smoothly insert the wave generator by turning it.
2. Pay attention so that the effect of misalignment and turnover is within the recommended value (see “Built-in precision” on Page 224) for the wave generator without Oldham’s coupling mechanism.

Precautions on the circular spline

1. Is flatness of the mounting surface poor or distorted?
2. Is any embossment of the screw hole area, burr or trapped foreign matter found?
3. Have chamfering and relief working of the corner been conducted to prevent interference of the corner of the circular spline in the house built-in area?
4. Can the circular spline rotate built in the house? Does it interfere with or catch on any part?
5. Does any bolt inserted into the mounting bolt hole interfere with the circular spline and rotate irregularly due to the bolt hole being misaligned or oblique?
6. Do not tighten the bolts with the specified torque all at once. Tighten the bolts temporarily with about half the specified torque, and then tighten them with the specified torque. Tighten them in an even, crisscross pattern.
7. Avoid pinning the circular spline if possible as it may reduce the rotational precision.

Precautions on the flexspline

1. Is flatness of the mounting surface poor or distorted?
2. Is any embossment of the screw hole area, burr or trapped foreign matter found?
3. Have chamfering and relief working of the corner been conducted to prevent the interference of the corner of the circular spline in the house built-in area?
4. Does any bolt inserted into the mounting bolt hole interfere with the circular spline and rotate irregularly due to the bolt hole being misaligned or oblique?
5. Do not tighten the bolts with the specified torque all at once. Tighten the bolts temporarily with about half the specified torque, and then tighten them with the specified torque. Tighten them in an even, crisscross pattern.
6. Does it engage with the circular spline in an extremely unbalanced way when it is combined? If it is unbalanced, they could be misaligned or not upright.

On anti-rust provision

The surface of HarmonicDrive® is not anti-rust treated. Apply anti-rust agent to the surface if required. Contact us if you would like us to provide the surface with anti-rust treatment.

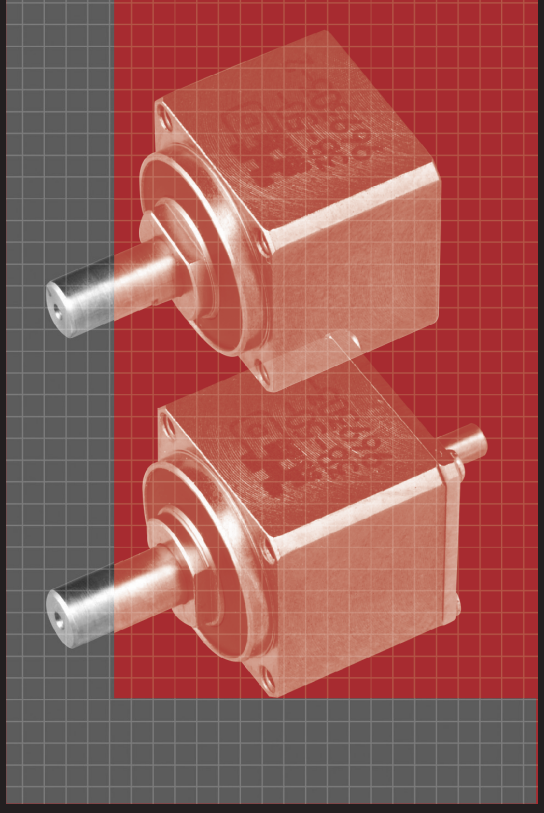

CSF supermini Series

Unit Type CSF supermini

Features

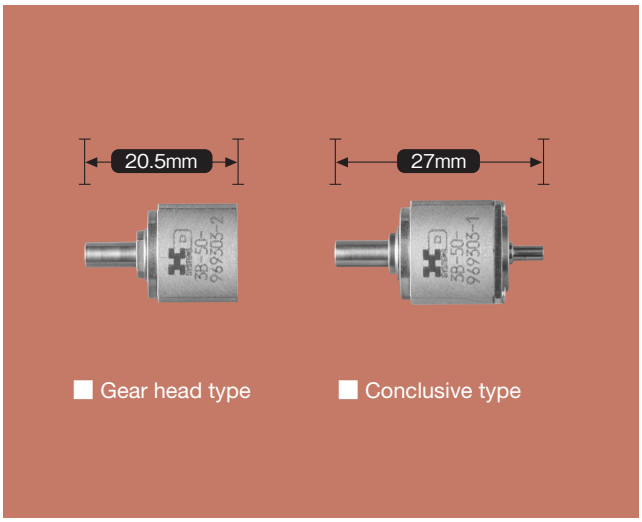

* Exact sized photograph

■CSF supermini series unit type

The CSF supermini series is a unitized product to facilitate the smallest model of HarmonicDrive®. Our proprietary "4-point contact ball bearing" has been adopted for the main roller bearing to enable direct support of the external load.
The CSF supermini series comes in two types - Gear head type (1U-CC) that is mounted directly onto a servo motor and dual-shaft unit type (1U) equipped with an input shaft and output shaft. Select a model that is optimum for your design needs for machines and equipment.

Features of CSF supermini series

- ■Compact and lightweight
- ■Compact and simple design
- ■High torque capacity
- ■High stiffness
- ■Non-backlash
- ■High positioning and rotational accuracies
- ■Coaxial input and output

Structure of the CSF supermini series unit type

Fig. 236-1

Conclusive type (1U)

This is a conclusive-type, double-shaft unit with an input shaft and an output shaft. Even if you are not familiar with handling HarmonicDrive®, you can easily handle it and can obtain high-precision positioning.

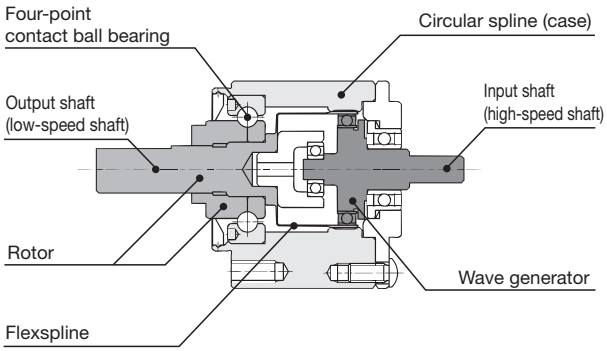

Gear head type (1U-CC)

This is a gear head designed to be combined with a high-performance compact servo motor. It sports the ultimate output characteristics among gears of the same size.

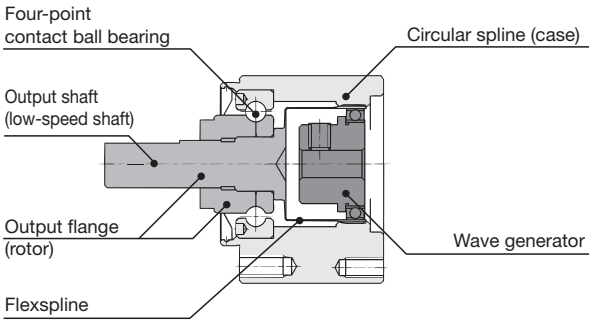

* The rotational direction of the output shaft is opposite to that of the input shaft (wave generator) when the circular spline (case) is fixed.

Model and symbol

The HarmonicDrive® CSF supermini series consists of wide variety of products including four model numbers and three models. Place an order using the following symbols as a reference.

CSF - 3 B - 50 - 1U - CC -SP

Table 237-1

Model name	Model	Version symbol	Reduction ratio*			Model	Special specification
CSF Series	3	B	30	50	100	1U = Conclusive type 1U-CC = Gear head type	SP= Special specifications such as shapes and performance None= Standard product

* The reduction ratio indicates the value for the following condition.
Input: wave generator, fixed: circular spline (CASE), output: output shaft

Technical Data

Rating table

Table 237-2

Model	Reduction ratio	Rated torque at input 2000r/min		Peak torque at start/stop		Permissible max. value of ave. load torque		Instantaneous permissible max. torque		Permissible max. input rotational speed	Permissible ave. input rotational speed	Inertia moment (1/4GD²)*1
		N·m	kgf·m	N·m	kgf·m	N·m	kgf·m	N·m	kgf·m	r/min	r/min	kg·cm²
3	30	0.06	0.006	0.13	0.013	0.10	0.010	0.22	0.022	10000	6500	1U:5.3×10^{-7} 1U-CC:7.0×10^{-7}
	50	0.11	0.011	0.21	0.021	0.13	0.013	0.41	0.040			
	100	0.15	0.015	0.30	0.029	0.23	0.023	0.57	0.056			

*1 The upper value of inertia moment is for 1U type, whereas, the lower value of it is for 1U-CC type.

Angle transmission accuracy

See "Engineering data" for a description of terms.

Table 238-1

Reduction ratio	Model / Unit	3
All Ratios	$\times 10^{-3}$rad	2.9
	arc-min	10

Hysteresis loss

See "Engineering data" for a description of terms.

Table 238-2

Reduction ratio	Model	3
30	$\times 10^{-4}$rad	13
	arc-min	4.5
50	$\times 10^{-4}$rad	12
	arc-min	4
100	$\times 10^{-4}$rad	12
	arc-min	4

Starting torque

See "Engineering data" for a description of terms. As the values in the table below vary depending on the use conditions, use them as reference values.

Table 238-3
Unit: cN·m

Reduction ratio	Model	3	
		1U	1U-CC
30		0.34	0.32
50		0.30	0.28
100		0.26	0.24

Overdrive starting torque

See "Engineering data" for a description of terms. As the values in the table below vary depending on the use conditions, use them as reference values.

Table 238-4
Unit: N·m

Reduction ratio	Model	3	
		1U	1U-CC
30		0.14	0.12
50		0.14	0.11
100		0.16	0.13

Ratcheting torque

See "Engineering data" for a description of terms.

Table 238-5
Unit: N·m

Reduction ratio	Model	3
30		0.88
50		0.83
100		0.74

Buckling torque

See "Engineering data" for a description of terms.

Table 238-6
Unit: N·m

Model	3
All Ratios	3.7

Specification of the main roller bearing

A precision 4-point contact ball bearing is built in the CSF supermini series to directly support the external load (output flange).
Check the maximum load moment load, life of the 4-point contact ball bearing and static safety coefficient to fully bring out the performance of the CSF supermini series.
See the page 030 to 034 of “Engineering data” for each calculation formula.

■Checking procedure

(1) Checking the maximum load moment load (M*max*)

Obtain the maximum load moment load (M*max*). → Maximum load moment load (M*max*) ≦ permissible moment (Mc)

(2) Checking the life

Obtain the average radial load (Fr*av*) and the average axial load (Fa*av*). → Obtain the radial load coefficient (x) and the axial load coefficient (y). → Calculate the life and check it.

(3) Checking the static safety coefficient

Obtain the static equivalent radial load coefficient (Po). → Check the static safety coefficient. (fs)

■Main roller bearing specifications

Specifications

Table 239-1

Model	Pitch circle dia. of a roller	Offset amount	Basic rated load		Permissible moment load	Moment rigidity	Permissible radial load *	Permissible thrust load
	dp	R	Basic dynamic rated load	Basic static rated load				
	mm	mm	$\times10^2$N	$\times10^2$N	N·m	N·m/rad	N	N
3	7.7	4.1	6.65	4.24	0.27	0.9×10^2	36	130

* Permissible radial load is the value on the center of output shaft side of both shaft type (1U) and that of gear head shaft output type (1U-CC).
* The value of the moment rigidity is the average value.

Lubrication

Grease lubrication is the standard lubrication of the CSF supermini series. As products are greased and shipped, you are not required to apply grease during assembly. The following kinds of grease are used for lubricant.

Table 239-2

Lubricated area	Reducer
Lubricant name used	Harmonic grease® SK-2
Manufacturer	Harmonic Drive Systems
Base oil	Refined oil
Puffing agent	Lithium soap
Consistency (25°C)	265 to 295
Drop point	198°C
Appearance	Green

Technical data of input shaft type

Outline drawing of conclusive type 1U

Conclusive type unit of full connection with input and output shaft.
You can download the CAD data (DXF) of this product from the following homepage.
URL: https://www.hds.co.jp/

Fig. 240-1
Unit: mm

Mass: 13.7g

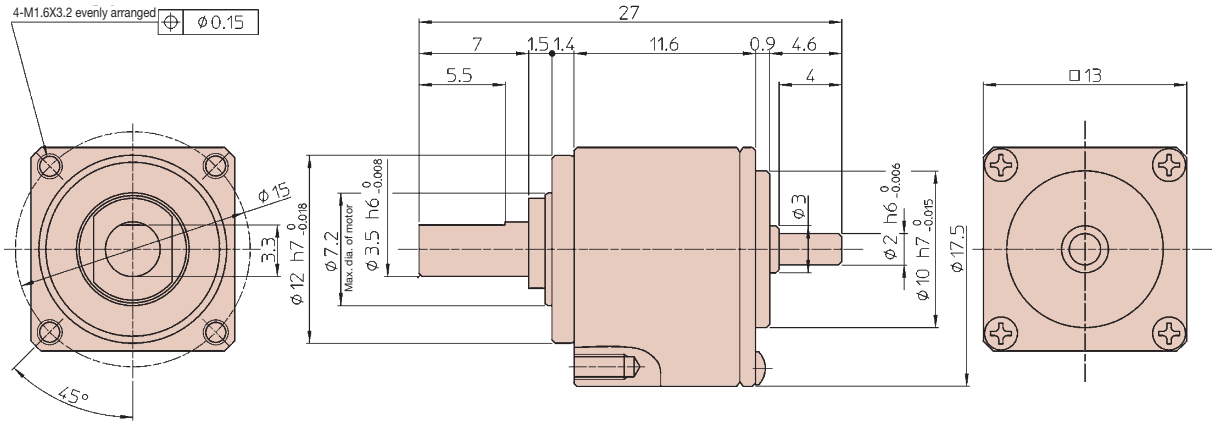

* Check the delivered specifications for details of the sizes.
* The allowance varies depending on the part manufacturing method (cast or machined products).
  Contact us if the allowance is not described in the dimensions and is required.

Outline drawing of Gear head type 1U-CC

A gear head based on the concept featuring a combination with a high-performance compact servo motor.
You can download the CAD data (DXF) of this product from the following homepage.
URL: https://www.hds.co.jp/

Fig. 240-2
Unit: mm

Mass: 11.4g

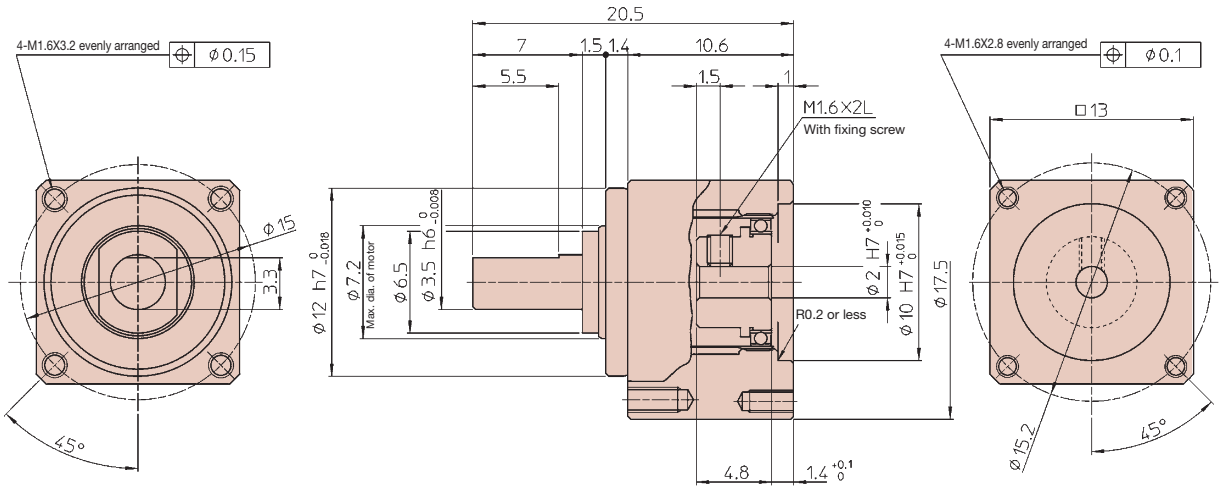

* Check the delivered specifications for details of the sizes.
* The allowance varies depending on the part manufacturing method (cast or machined products).
  Contact us if the allowance is not described in the dimensions and is required.

Rigidity (Spring constant)

See "Engineering data" for a description of terms.

Table 241-1

Symbol		Model	3
T_1		N·m	0.016
		kgf·m	0.0016
T_2		N·m	0.05
		kgf·m	0.005
Reduction ratio 30	K_1	N·m/rad	27
		$\times10^{-4}$kgf·m/arc-min	8
	K_2	N·m/rad	40
		$\times10^{-4}$kgf·m/arc-min	12
	K_3	N·m/rad	51
		$\times10^{-4}$kgf·m/arc-min	15
	θ_1	$\times10^{-4}$rad	5.9
		arc-min	2.0
	θ_2	$\times10^{-4}$rad	12.5
		arc-min	4.2
Reduction ratio 50	K_1	N·m/rad	30
		$\times10^{-4}$kgf·m/arc-min	9
	K_2	N·m/rad	47
		$\times10^{-4}$kgf·m/arc-min	14
	K_3	N·m/rad	57
		$\times10^{-4}$kgf·m/arc-min	17
	θ_1	$\times10^{-4}$rad	5.3
		arc-min	1.8
	θ_2	$\times10^{-4}$rad	10.6
		arc-min	3.6
Reduction ratio 100	K_1	N·m/rad	34
		$\times10^{-4}$kgf·m/arc-min	10
	K_2	N·m/rad	54
		$\times10^{-4}$kgf·m/arc-min	16
	K_3	N·m/rad	67
		$\times10^{-4}$kgf·m/arc-min	20
	θ_1	$\times10^{-4}$rad	4.7
		arc-min	1.6
	θ_2	$\times10^{-4}$rad	9.3
		arc-min	3.1

* The values in this table are reference values. The lower-limit value is approximately 80% of the displayed value.

Mechanical precision

CSF supermini series have four-point contact ball bearing of high precision on main shaft bearing, and realized the high mechanical precision of output part. The mechanical precision of the output shaft is shown below.

Recommended precision for the mounting case

Table 241-2
*T.I.R.Unit: mm

Symbol	Precision item / Model	3
a	Fluctuation on the edge of the output shaft	0.030
b	Concentricity of the mounting spigot	0.020
c	Squareness of the mounting face	0.020
d	Fluctuation on the output flange face	0.005
e	Parallelism of the mounting face and the output flange face	0.015

* T.I.R.: This indicates the total reading of the dial gauge when the measuring part is rotated once.

The output shaft of the input shaft type

Fig. 241-1

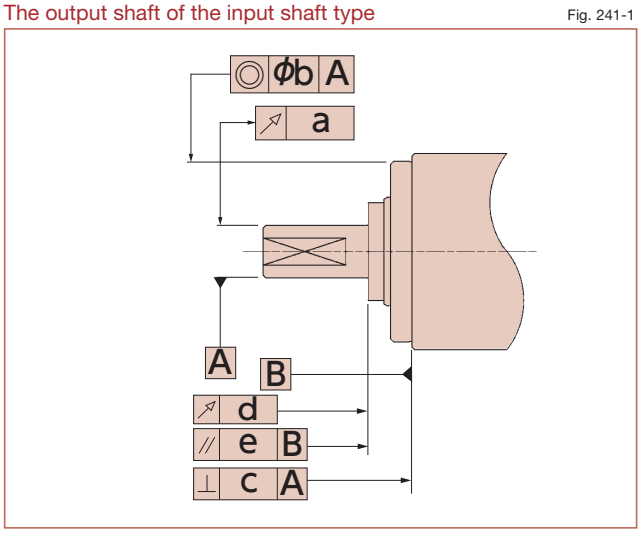

Efficiency characteristics

The efficiency varies depending on the following conditions.

- ■Reduction ratio
- ■Input rotational speed
- ■Load torque
- ■Temperature
- ■Lubrication condition (Type of lubricant and the quantity)

Measuring condition

Table 242-1

Load torque	Rated torque in rating table (see Page 237)		
Lubricating condition	Grease lubrication	Name	Harmonic grease® SK-2
		Application qty.	Appropriate application quantity

■Efficiency correction coefficient

If the load torque is smaller than the rated torque, the efficiency value lowers. Obtain correction coefficient Ke from the efficiency correction coefficient Graph 242-1 to obtain the efficiency using the following example of calculation.

Example of calculation

Efficiency η (%) under the following condition is obtained from the example of CSF-8-100-1U.

Input rotational speed: 1000 r/min Lubrication method: Grease lubrication

Load torque: 2.0 N·m Lubricant temperature: 20°C

Since the rated torque of model number 8 with a reduction ratio of 100 is 2.4 N·m (Ratings: Page 237), the torque ratio α is 0.83. (α=2.0/2.4≒0.83)

- ■The efficiency correction coefficient is Ke=0.93 from Graph 242-1.
- ■Efficiency η at load torque 2.0 N·m: η=Ke·η_R=0.99 x 77=76%

Efficiency correction coefficient

Graph 242-1

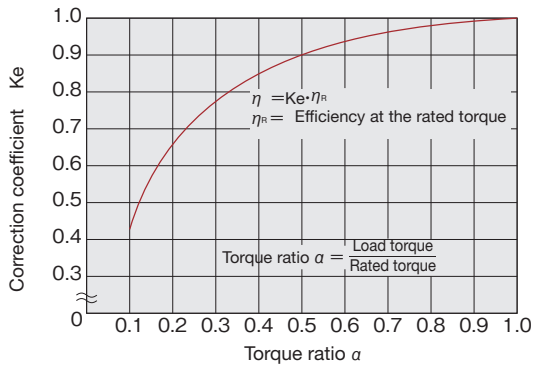

* Efficiency correction coefficient Ke=1 holds when the load torque is greater than the rated torque.

■Efficiency at rated torque

Model No. 3: conclusive unit type (1U)

Reduction ratio 30

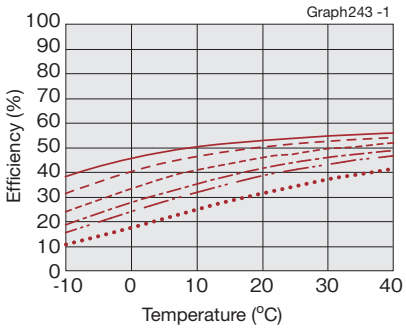

Reduction ratio 50

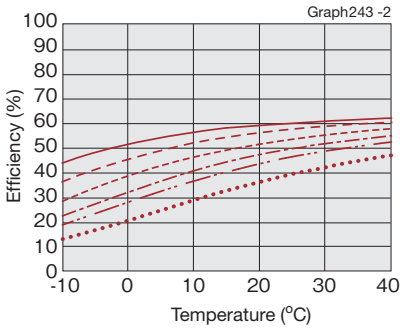

Reduction ratio 100

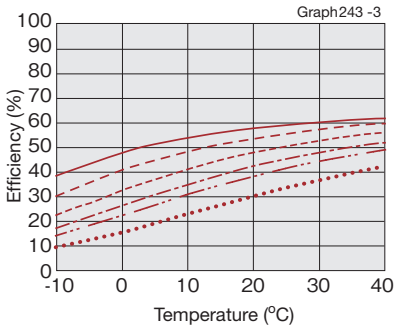

Model No. 3: gear head type (1U-CC)

Reduction ratio 30

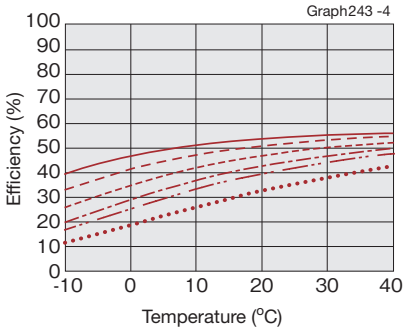

Reduction ratio 50

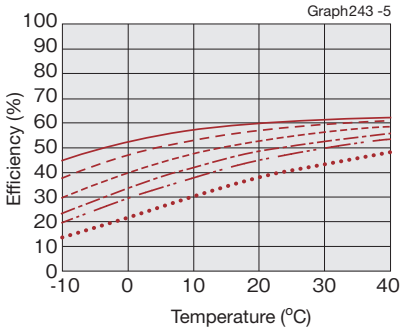

Reduction ratio 100

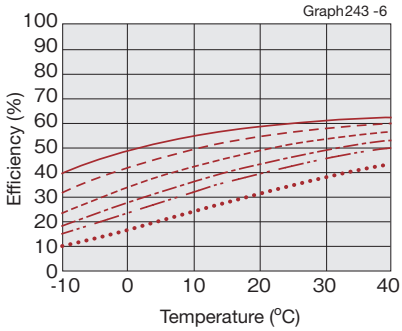

Input rotational speed

500r/min　1000r/min　2000r/min　3500r/min
5000r/min　10000r/min

On no-load running torque

No-load running torque means the torque on the input side (high-speed shaft side) required to put HarmonicDrive® under a no-load condition.
* Contact us for detailed value.

Measuring condition

Table 244-1

CSF-3-100-1U-CC (Gear head type)			
Reduction ratio 100			
Lubrication condition	Grease lubrication	Name	Harmonic grease® SK-2
The torque value is the value after a trial run for two hours or longer at an input of 2000 r/min.			

■Correction quantity by reduction

The no-load running torque of HarmonicDrive® varies depending on the reduction ratio. Graphs 244-1 shows the values for a reduction ratio of 100. Obtain other reduction ratios by adding the correction quantity shown in the right-hand table (Table 244-2).

Correction quantity for the no-load running torque

Table 244-2
Unit: cN·m

Model \ Reduction ratio	30	50	100
Conclusive type (1U)	0.026	0.023	0.006
Gear head type (1U-CC)	0.020	0.017	—

■No-load running torque for Gear head type (1U-CC, reduction ratio of 100)

Graph 244-1

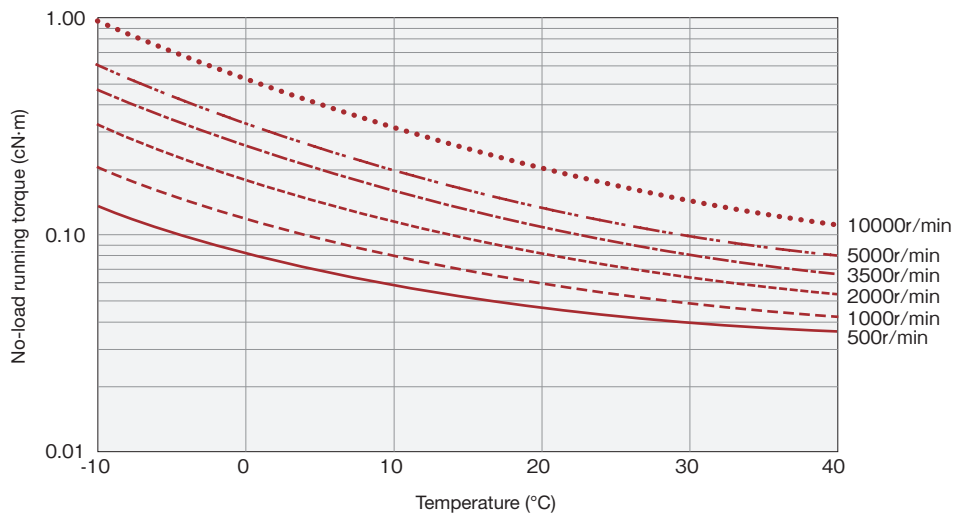

*The values in this graph are average values ($\bar{X}$).

Permissible load of the input part

■Permissible load of conclusive unit type (1U)

The input part of conclusive unit type is supported by two single-row deep-groove bearings. Check the load applied to the input part to fully bring out the performance of conclusive unit type.
The following figure shows the supporting point of the bearing. See the following table for the size of (a) and (b). The following graph shows the relation between the maximum permissible radial load and the thrust load of model number 3.
The values in the following graph are those assuming that the average input rotational speed is 2,000 r/min and the basic rated life, L_{10}, is 7,000 hours

Example: When a 3-N thrust load (Fa) is applied to the input shaft, the value of the maximum permissible radial load (Fr) is 3.75 N.

* For structural reasons, the input shaft moves in the axial direction when the external force is applied to it. However, it is not a malfunction.

Bearing specifications of the input part

Table 245-1

Model	Bearing A			Bearing B			Distance between bearings a	Overhang length of the input shaft b	Maximum radial load
	Model	Basic dynamic rated load	Basic static rated load	Model	Basic dynamic rated load	Basic static rated load			
		Cr (N)	Cor (N)		Cr (N)	Cor (N)	a (mm)	b (mm)	Fr (N)
3	MF-63T12ZZ	242	94	681X	102	29	5.05	5.85	6

Supporting point of the roller bearing

Fig. 245-1

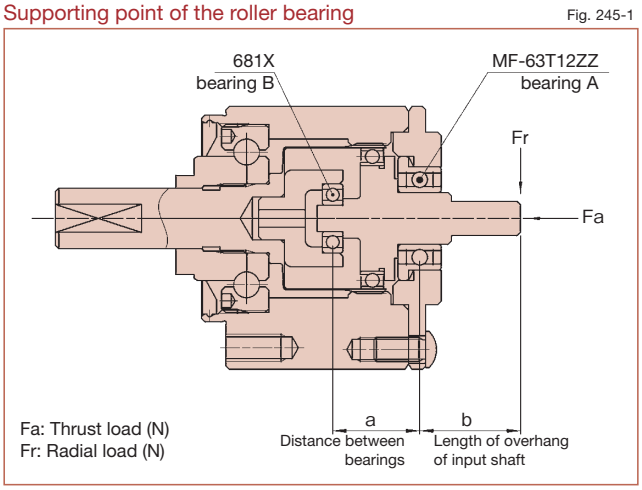

Relation between the radial load and the thrust load

Graph 245-1

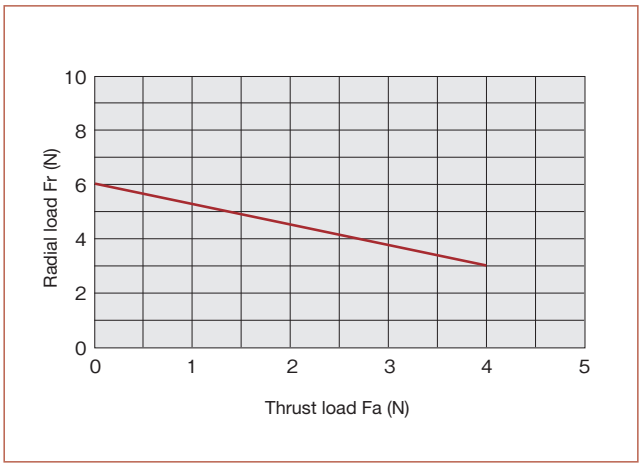

Installation and transmission torque

■Installation on the equipment

Check the flatness of the mounting face and burrs on the tap to install the CSF supermini series on the equipment, and tighten the mounting flange (A in Figure 246-1) with bolts.

Tightening torque of the bolt* of the mounting flange (A in Figure 246-1)

Table 246-1

Item \ Model		3
Number of bolts		4
Bolt size		M1.6
Mounting P.C.D.	mm	15
Tightening torque	N·m	0.26
	kgf·m	0.03
Min. length of engagement of the screw	mm	1.9
Transmission torque	N·m	3.0
	kgf·m	0.3

* Recommended bolt name: JIS B 1176 hexagonal bolt, intensity type: JIS B 1051 12.9 or more.

Mounting flange

Fig. 246-1

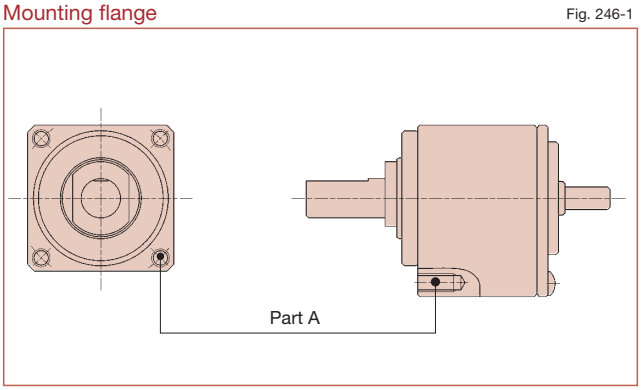

■Installation of the output shaft

Do not allow the output shaft to receive a shock when you install a pulley and pinion. It can deteriorate the precision of the reducer and cause failure.

Technical data of motor mounting type

Example of installation

The following shows an example of the representative installation of gear head type (1U-CC).

Fig. 247-1

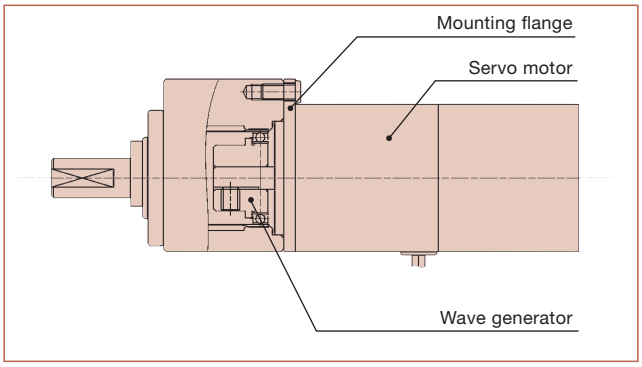

(Note) Refer to the "CSF-3 Series Technical Information" when mounting onto a servo motor.

Installation precision

Maintain the recommended precision shown in Figure 248-1 and Table 248-1 to fully bring out the excellent performance of CSF supermini series.

Recommended precision for mounting

Fig. 248-1

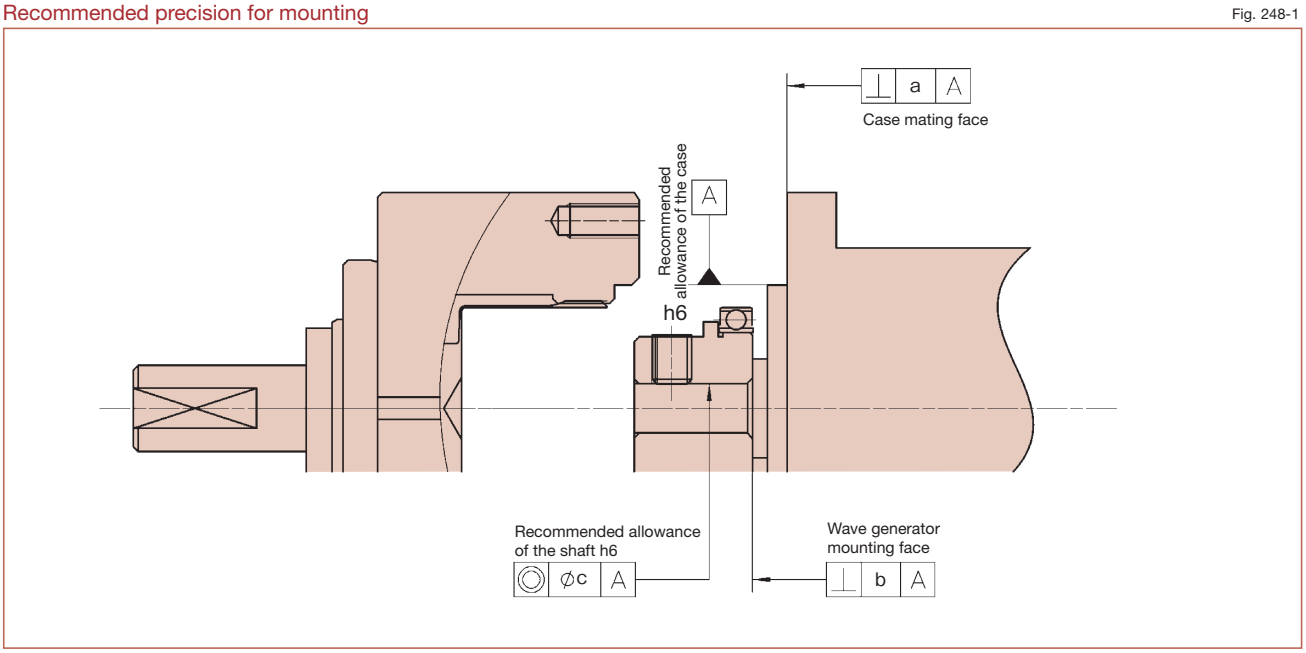

Recommended precision of the mounting case

Table 248-1
Unit: mm

Symbol	Precision item \ Model	3
a	Squareness of the case mating face	0.006
b	Mounting face of the wave generator	0.004
c	Concentricity of the input shaft	0.004

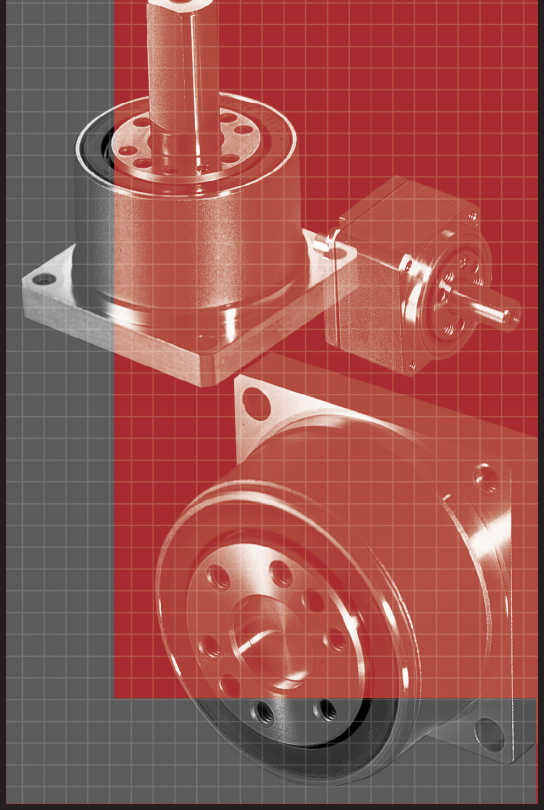

CSF-mini Series

Unit Type CSF-mini

Features

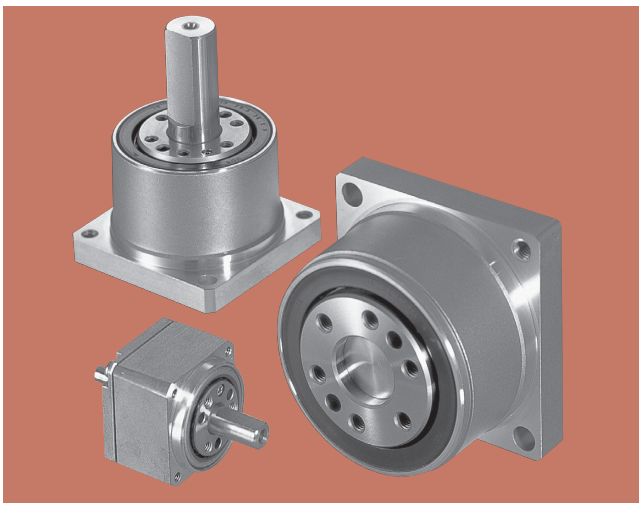

■CSF-mini series unit type

The CSF-mini series is a unitized product to facilitate the smallest model of HarmonicDrive®. Our proprietary "4-point contact ball bearing" has been adopted for the main roller bearing to enable direct support of the external load.
The CSF-mini series includes the input shaft type (1U) that is compatible with such input types as the motor mounting type (2XH) and belt gear coupling. Select a model that is optimum for your design needs for machines and equipment.

Features of CSF-mini series

- ■Compact and lightweight
- ■Compact and simple design
- ■High torque capacity
- ■High stiffness
- ■Non-backlash
- ■High positioning and rotational accuracies
- ■Coaxial input and output

Structure of the CSF-mini series unit type

Fig. 250-1

Input shaft type

This is a conclusive-type, double-shaft unit with an input shaft and an output shaft. It also can be used with the input, such as belt, gear, couplings.

Conclusive type: 1U

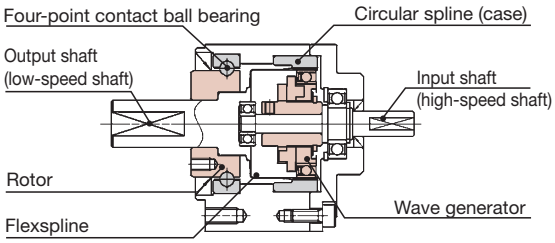

Flange output type: 1U-F

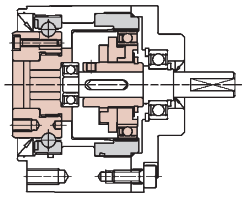

Motor mounting type

This is a gear head designed to be combined with a high-performance compact servo motor. It sports the ultimate output characteristics among gears of the same size.

1U shape shaft output type: 1U-CC

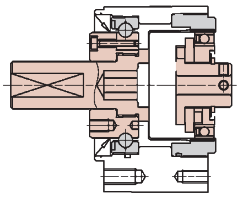

1U shape flange output type: 1U-CC-F

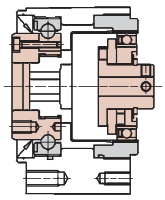

Shaft output type: 2XH-J

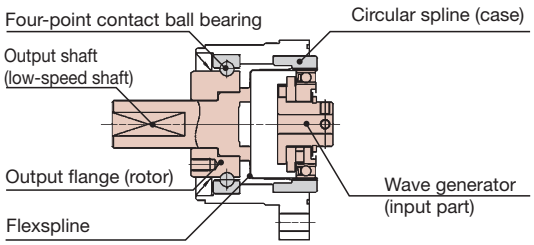

Flange output type: 2XH-F

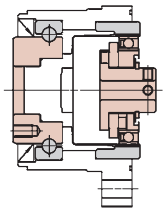

* The rotational direction of the output shaft is opposite to that of the input shaft (wave generator) when the circular spline (case) is fixed.

Model and symbol

The HarmonicDrive® CSF-mini series consists of wide variety of products including four model numbers and six models. Place an order using the following symbols as a reference.

CSF - 14 - 100 - 2XH - F - SP

Table 251-1

Model name	Model	Reduction ratio*				Model	Special specification
CSF series	5	30	50	—	100	1U= Input shaft type, shaft output type (conclusive type) 1U-F= Input shaft type, flange output type 1U-CC= 1U shape motor mounting type, shaft output type 1U-CC-F= 1U shape motor mounting type, flange output type 2XH-J= Motor mounting type, shaft output 2XH-F= Motor mounting type, flange output	SP= Special specifications such as shapes and performance None= Standard product
	8	30	50	—	100		
	11	30	50	—	100		
	14	30	50	80	100		

* The reduction ratio indicates the value for the following condition.
Input: wave generator, fixed: circular spline, output: flexspline

Technical Data

Rating table

Table 251-2

Model	Reduction ratio	Rated torque at input 2000r/min	Peak torque at start/stop	Permissible max. value of ave. load torque	Instantaneous permissible max. torque	Permissible max. input rotational speed	Permissible ave. input rotational speed	Inertia moment $(1/4GD^2)$*1
		N·m	N·m	N·m	N·m	r/min	r/min	kg·cm²
5	30	0.25	0.5	0.38	0.9	10000	6500	2.5×10^{-4} 2.5×10^{-4}
	50	0.4	0.9	0.53	1.8			
	100	0.6	1.4	0.94	2.7			
8	30	0.9	1.8	1.4	3.3	8500	3500	3.2×10^{-3} 3.0×10^{-3}
	50	1.8	3.3	2.3	6.6			
	100	2.4	4.8	3.3	9.0			
11	30	2.2	4.5	3.4	8.5	8500	3500	1.4×10^{-2} 1.2×10^{-2}
	50	3.5	8.3	5.5	17			
	100	5.0	11	8.9	25			
14	30	4.0	9.0	6.8	17	8500	3500	3.4×10^{-2} 3.3×10^{-2}
	50	5.4	18	6.9	35			
	80	7.8	23	11	47			
	100	7.8	28	11	54			

*1 The upper value of inertia moment is for 1U type, whereas, the lower value of it is for 2 XH type.

Angle transmission accuracy

See "Engineering data" for a description of terms.

Table 252-1

Reduction ratio	Unit \ Model	5	8	11	14
30	$\times10^{-3}$rad	1.20	0.58	0.58	0.58
	arc-min	4.00	2.00	2.00	2.00
50 or more	$\times10^{-3}$rad	0.87	0.58	0.44	0.44
	arc-min	3.00	2.00	1.50	1.50

Hysteresis loss

See "Engineering data" for a description of terms.

Table 252-2

Reduction ratio	Model	5	8	11	14
30	$\times10^{-4}$rad	8.7	8.7	8.7	8.7
	arc-min	3.0	3.0	3.0	3.0
50	$\times10^{-4}$rad	8.7	5.8	5.8	5.8
	arc-min	3.0	2.0	2.0	2.0
80 or more	$\times10^{-4}$rad	8.7	5.8	5.8	2.9
	arc-min	3.0	2.0	2.0	1.0

Max. backlash quantity

See "Engineering data" for a description of terms.

Table 252-3

Reduction ratio	Model	8	11	14
30	$\times10^{-5}$rad	28.6	23.8	29.1
	arc-sec	59	49	60
50	$\times10^{-5}$rad	17	14.1	17.5
	arc-sec	35	24	36
80	$\times10^{-5}$rad	—	—	11.2
	arc-sec	—	—	23
100	$\times10^{-5}$rad	8.7	7.3	8.7
	arc-sec	18	15	18

Starting torque

See "Engineering data" for a description of terms. As the values in the table below vary depending on the use conditions, use them as reference values.

Table 252-4
Unit: cN·m

Reduction ratio \ Model	5	8	11	14
30	0.53	1.3	3.4	6.4
50	0.40	0.80	2.0	4.1
80	—	—	—	2.8
100	0.30	0.59	1.5	2.5

Overdrive starting torque

See "Engineering data" for a description of terms. As the values in the table below vary depending on the use conditions, use them as reference values.

Table 252-5
Unit: N·m

Reduction ratio \ Model	5	8	11	14
30	0.29	0.70	1.7	2.4
50	0.21	0.55	1.2	1.6
80	—	—	—	1.6
100	0.27	0.75	1.5	1.8

Ratcheting torque

See "Engineering data" for a description of terms.

Table 252-6
Unit: N·m

Reduction ratio \ Model	5	8	11	14
30	2.7	11	29	59
50	3.2	12	34	88
80	—	—	—	110
100	3.5	14	43	84

Buckling torque

See "Engineering data" for a description of terms.

Table 252-7
Unit: N·m

Model	5	8	11	14
All Ratios	9.8	35	90	190

Specification of the main roller bearing

A precision 4-point contact ball bearing is built in the CSF-mini series to directly support the external load (output flange).
Check the maximum load moment load, life of the 4-point contact ball bearing and static safety coefficient to fully bring out the performance of the CSF-mini series.
See the page 030 to 034 of “Engineering data” for each calculation formula.

■Checking procedure

(1) Checking the maximum load moment load (M*max*)

Obtain the maximum load moment load (M*max*). → Maximum load moment load (M*max*) ≦ permissible moment (Mc)

(2) Checking the life

Obtain the average radial load (Fr*av*) and the average axial load (Fa*av*). → Obtain the radial load coefficient (x) and the axial load coefficient (y). → Calculate the life and check it.

(3) Checking the static safety coefficient

Obtain the static equivalent radial load coefficient (Po). → Check the static safety coefficient. (fs)

■Main roller bearing specifications

Specifications

Table 253-1

Model	Pitch circle dia. of a roller	Offset amount	Basic rated load		Permissible moment load	Moment rigidity	Permissible radial load *	Permissible thrust load
	dp	R	Basic dynamic rated load	Basic static rated load				
	mm	mm	$\times10^2$N	$\times10^2$N	N·m	N·m/rad	N	N
5	13.5	4.85	9.14	7.63	0.89	7.41×10^2	90	270
8	20.5	7.3	21.6	19.0	3.46	2.76×10^3	200	630
11	27.5	9	38.9	35.4	6.6	7.41×10^3	300	1150
14	35	11.4	61.2	58.5	13.2	1.34×10^4	550	1800

*Permissible radial load is the value on the center of output shaft side of both shaft type (1U) and that of gear head shaft output type (2XH-J).
*The values in this table are reference values. The lower-limit value is approximately 80% of the displayed value.

Lubrication

Grease lubrication is the standard lubrication of the CSF-mini series. As products are greased and shipped, you are not required to apply grease during assembly. The following kinds of grease are used for lubricant.

Table 253-2

Lubricated area	Reducer	Main roller bearing
Lubricant name used	Harmonic grease® SK-2	Mul temp HL-D
Manufacturer	Harmonic Drive Systems	Kyodo Yushi
Base oil	Refined oil	Composite hydrocarbon oil
Puffing agent	Lithium soap	Lithium soap
Consistency (25°C)	295	280
Drop point	198°C	210°C
Appearance	Green sticky state	White sticky state

Technical data of input shaft type

Shaft output: outline drawing of 1U

Conclusive type unit of full connection with input and output shaft.
You can download the CAD data (DXF) of this product from the following homepage.
URL: https://www.hds.co.jp/

Fig. 254-1

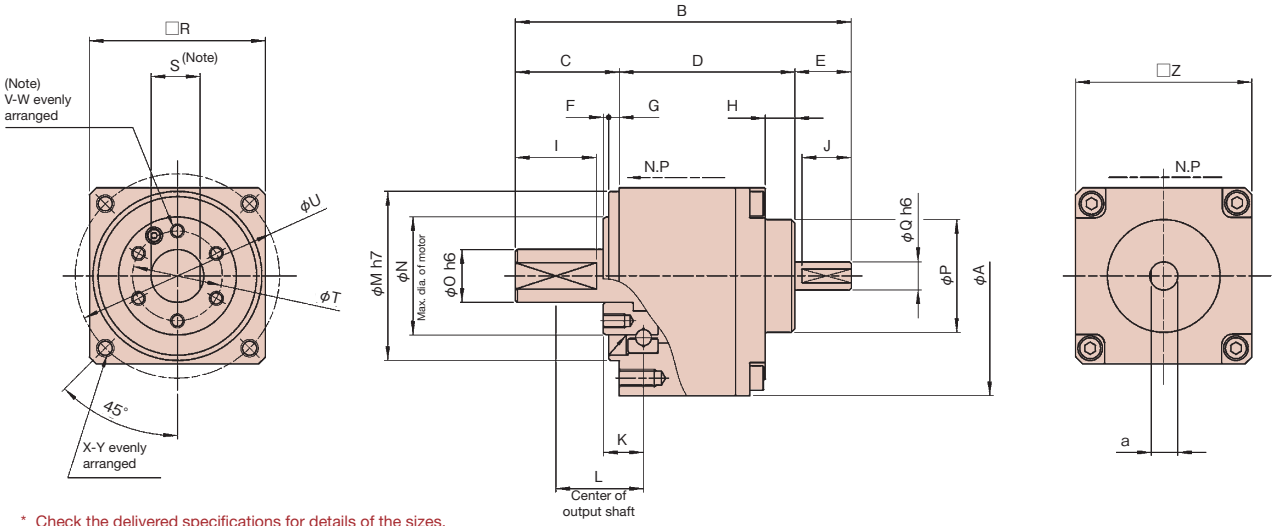

* Check the delivered specifications for details of the sizes.
* The allowance varies depending on the part manufacturing method (cast or machined products). Contact us if the allowance is not described in the dimensions and is required.

(Note) There is no position relationship with D cut of output shaft (low-speed shaft) and V-W tap. Be careful when it is used.

Measurement table

Table 254-1
Unit: mm

Symbol \ Model	5	8	11	14
φA	26.5	40	54	68
B	37	65.5	82.5	95.4
C	13	23	29.5	29.5
D	16	29.5	37	49.9
E	8	13	16	16
F	0.5	0.5	0.5	1.5
G	2.5	2.5	3	3
H	0.8	2.6	3.9	8.4
I	9	18	21.5	23
J	7	11	14	14
K	4.85	7.3	9	11.4
L	9.85	17.3	22	23.9
φM h7	19.5	29	39	48
φN	13	20	26.5	33.5
φO h6	5	9	12	15
φP	9	16	24	32
φQ h6	3	5	6	8
□R	20.4±0.42	30.7±0.46	40.9±0.50	51.1±0.50
S	4.6	8	10.5	14
φT	9.8	15.5	20.5	25.5
φU	23	35	46	58
V	3	4	6	6
W	M2×3	M3×4	M3×5	M4×6
X	4	4	4	4
Y	M2×3	M3×6	M4×8	M5×10
□Z	20±0.42	30±0.46	40±0.50	50±0.50
a	2.6	4.5	5.5	7.5
Mass (g)	35	130	240	440

Flange output: outline drawing of 1U-F

Conclusive type unit of full connection with input and output shaft.
You can download the CAD data (DXF) of this product from the following homepage.
URL: https://www.hds.co.jp/

Fig. 255-1

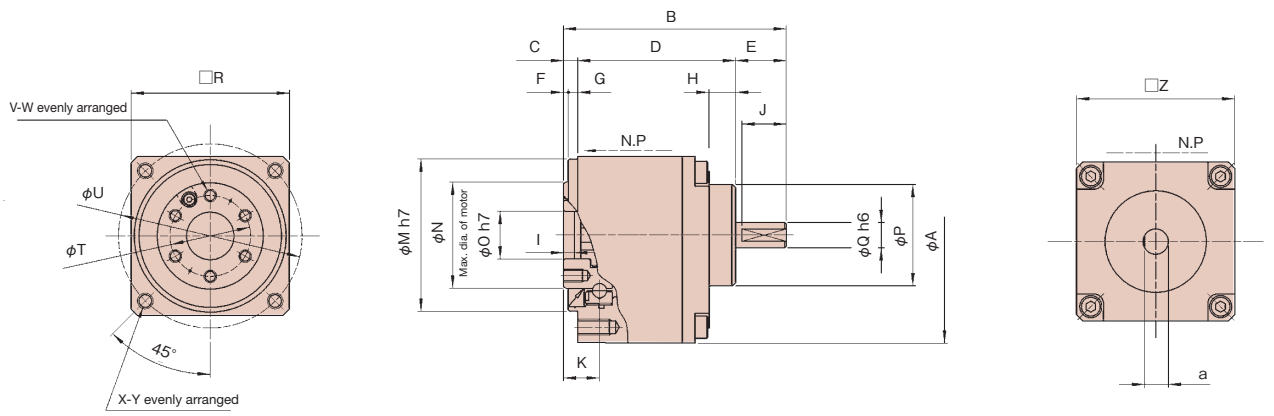

* Check the delivered specifications for details of the sizes.
* The allowance varies depending on the part manufacturing method (cast or machined products). Contact us if the allowance is not described in the dimensions and is required.

Measurement table

Table 255-1
Unit: mm

Symbol \ Model	5	8	11	14
ϕA	26.5	40	54	68
B	27	45.5	56.5	70.4
C	3	3	3.5	4.5
D	16	29.5	37	49.9
E	8	13	16	16
F	0.5	0.5	0.5	1.5
G	2.5	2.5	3	3
H	0.8	2.6	3.9	8.4
I	1.7	2.2	2.5	3.5
J	7	11	14	14
K	4.85	7.3	9	11.4
ϕM h7	19.5	29	39	48
ϕN	13	20	26.5	33.5
ϕO H7	5	9	12	15
ϕP	9	16	24	32
ϕQ h6	3	5	6	8
□R	20.4±0.42	30.7±0.46	40.9±0.5	51.1±0.5
ϕT	9.8	15.5	20.5	25.5
ϕU	23	35	46	58
V	3	4	6	6
W	M2×3	M3×4	M3×5	M4×6
X	4	4	4	4
Y	M2×3	M3×6	M4×8	M5×10
□Z	20±0.42	30±0.46	40±0.5	50±0.5
a	2.6	4.5	5.5	7.5
Mass (g)	34	120	220	405

Rigidity (Spring constant)

See "Engineering data" for a description of terms.

Table 256-1

Symbol \ Model			5		8		11		14	
			1U	1U-F	1U	1U-F	1U	1U-F	1U	1U-F
T_1		N·m	0.075		0.29		0.80		2.0	
		kgf·m	0.0077		0.030		0.082		0.20	
T_2		N·m	0.22		0.75		2.0		6.9	
		kgf·m	0.022		0.077		0.20		0.70	
Reduction ratio 30	K_1	$\times10^4$N·m/rad	0.009	0.010	0.031	0.034	0.077	0.084	0.172	0.188
		kgf·m/arc-min	0.003	0.003	0.009	0.010	0.023	0.025	0.051	0.056
	K_2	$\times10^4$N·m/rad	0.011	0.013	0.039	0.044	0.109	0.124	0.210	0.235
		kgf·m/arc-min	0.003	0.004	0.012	0.013	0.032	0.037	0.063	0.070
	K_3	$\times10^4$N·m/rad	0.012	0.016	0.046	0.054	0.134	0.158	0.286	0.335
		kgf·m/arc-min	0.004	0.005	0.014	0.016	0.040	0.047	0.085	0.100
	θ_1	$\times10^{-4}$rad	8.7	7.5	9.5	8.6	10	9.5	12	11
		arc-min	3.0	2.6	3.2	3.0	3.6	3.3	4.0	3.6
	θ_2	$\times10^{-4}$rad	22	19	21	19	21	19	35	31
		arc-min	7.5	6.4	7.3	6.6	7.4	6.6	12	11
Reduction ratio 50	K_1	$\times10^4$N·m/rad	0.011	0.013	0.039	0.044	0.177	0.221	0.286	0.335
		kgf·m/arc-min	0.003	0.004	0.012	0.013	0.053	0.066	0.085	0.100
	K_2	$\times10^4$N·m/rad	0.014	0.018	0.056	0.067	0.225	0.300	0.378	0.468
		kgf·m/arc-min	0.004	0.005	0.017	0.020	0.067	0.089	0.113	0.140
	K_3	$\times10^4$N·m/rad	0.017	0.025	0.067	0.084	0.236	0.320	0.440	0.568
		kgf·m/arc-min	0.005	0.007	0.020	0.025	0.070	0.095	0.131	0.170
	θ_1	$\times10^{-4}$rad	6.9	5.6	7.5	6.6	4.5	3.6	7.0	6.0
		arc-min	2.4	2.0	2.6	2.3	1.6	1.2	2.4	2.0
	θ_2	$\times10^{-4}$rad	18	14	16	14	9.9	7.6	20	16
		arc-min	6.0	4.8	5.4	4.7	3.4	2.6	6.8	5.6
Reduction ratio 80 or more	K_1	$\times10^4$N·m/rad	0.015	0.020	0.072	0.090	0.206	0.267	0.378	0.468
		kgf·m/arc-min	0.004	0.006	0.021	0.027	0.061	0.079	0.113	0.140
	K_2	$\times10^4$N·m/rad	0.018	0.027	0.080	0.104	0.243	0.333	0.460	0.601
		kgf·m/arc-min	0.005	0.008	0.024	0.031	0.072	0.099	0.137	0.179
	K_3	$\times10^4$N·m/rad	0.020	0.030	0.089	0.120	0.291	0.432	0.516	0.700
		kgf·m/arc-min	0.006	0.009	0.027	0.036	0.086	0.128	0.154	0.209
	θ_1	$\times10^{-4}$rad	5.0	3.7	4.1	3.2	3.9	3.0	5.3	4.3
		arc-min	1.7	1.3	1.4	1.1	1.3	1.0	1.8	1.5
	θ_2	$\times10^{-4}$rad	13	9.2	9.8	7.7	8.8	6.6	16	12
		arc-min	4.4	3.1	3.4	2.6	3.0	2.3	5.4	4.2

* The values in this table are reference values. The lower-limit value is approximately 80% of the displayed value.

Mechanical precision

CSF-mini series have four-point contact ball bearing of high precision on main shaft bearing, and realized the high mechanical precision of output part. The mechanical precision of the output shaft is shown below.

The output shaft of the input shaft type

Fig. 256-1

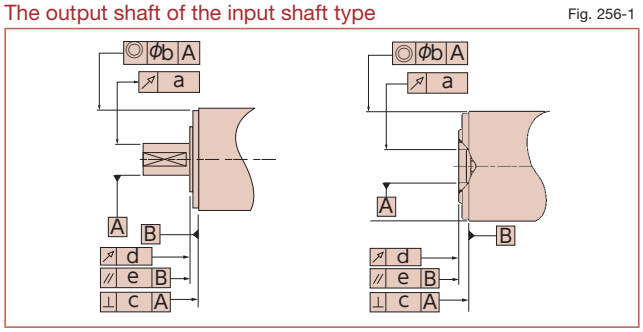

Recommended precision for the mounting case

Table 256-2
*T.I.R.Unit: mm

Symbol	Precision item \ Model	5		8		11		14	
		1U	1U-F	1U	1U-F	1U	1U-F	1U	1U-F
a	1U Fluctuation on the edge of the output shaft	0.030	—	0.030	—	0.030	—	0.030	—
	1U-F Fluctuation on the inner diameter of the output shaft	—	0.005	—	0.005	—	0.005	—	0.005
b	Concentricity of the mounting spigot	0.040		0.040		0.055		0.055	
c	Squareness of the mounting face	0.020		0.020		0.025		0.025	
d	Fluctuation on the output flange face	0.005		0.005		0.005		0.005	
e	Parallelism of the mounting face and the output flange face	0.015		0.020		0.030		0.030	

* T.I.R.: This indicates the total reading of the dial gauge when the measuring part is rotated once.

Efficiency characteristics

The efficiency varies depending on the following conditions.

- Reduction ratio
- Input rotational speed
- Load torque
- Temperature
- Lubrication condition (Type of lubricant and the quantity)

Measuring condition

Table 257-1

Load torque	Rated torque in rating table (see Page 251)		
Lubricating condition	Grease lubrication	Name	Harmonic grease® SK-2
		Application qty.	Appropriate application quantity

Efficiency correction coefficient

If the load torque is smaller than the rated torque, the efficiency value lowers. Obtain correction coefficient Ke from the efficiency correction coefficient graph 257-1 to obtain the efficiency using the following example of calculation.

Example of calculation

Efficiency η (%) under the following condition is obtained from the example of CSF-8-100-1U.

Input rotational speed: 1000 r/min

Load torque: 2.0 N·m

Lubrication method: Grease lubrication

Lubricant temperature: 20°C

Since the rated torque of model number 8 with a reduction ratio of 100 is 2.4 N·m (Ratings: Page 251), the torque ratio α is 0.83. (α=2.0/2.4≒0.83)

- The efficiency correction coefficient is Ke=0.99 from Graph 257-1.
- Efficiency η at load torque 2.0 N·m: η=Ke·η_R=0.99 x 77%=76%

* Efficiency correction coefficient Ke=1 holds when the load torque is greater than the rated torque.

Efficiency correction coefficient

Graph 257-1

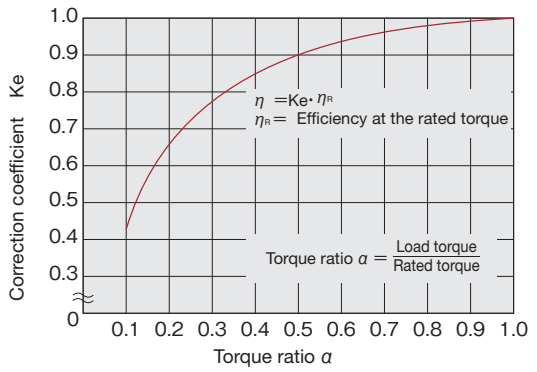

■Efficiency at rated torque

Mode No. 5

Reduction ratio 30

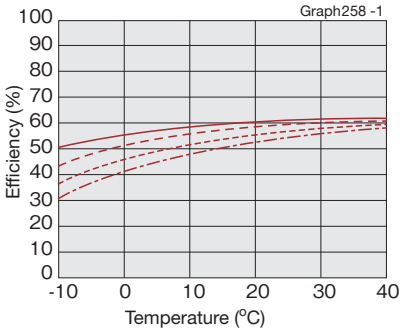

Reduction ratio 50

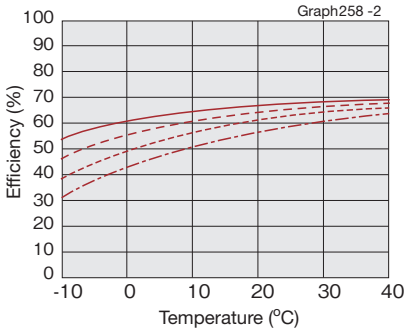

Reduction ratio 100

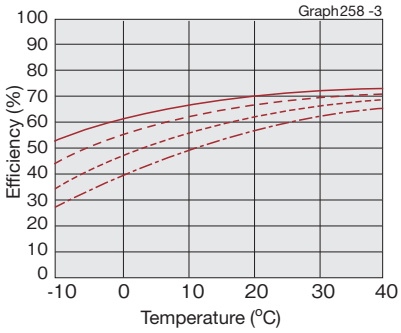

Mode No. 8

Reduction ratio 30

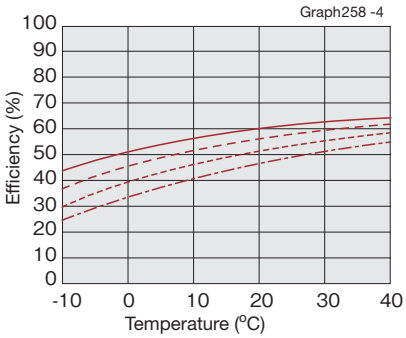

Reduction ratio 50

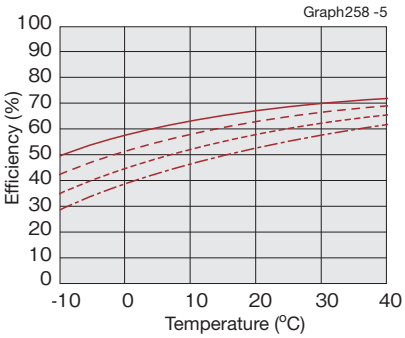

Reduction ratio 100

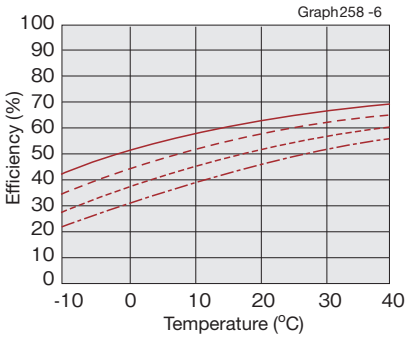

Mode No. 11

Reduction ratio 30

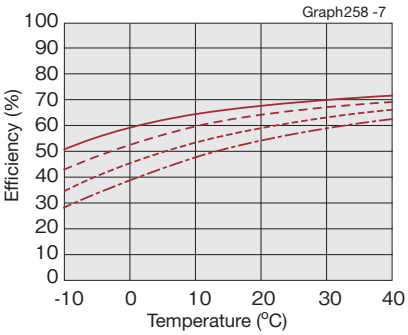

Reduction ratio 50

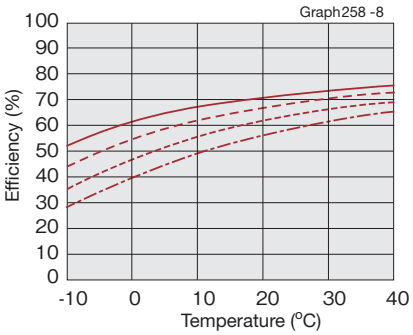

Reduction ratio 100

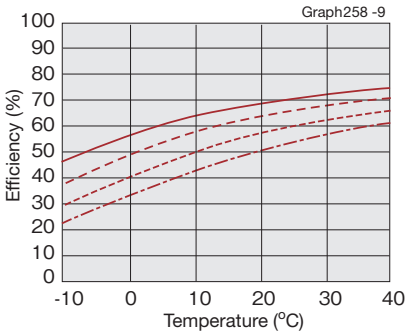

Mode No. 14

Reduction ratio 30

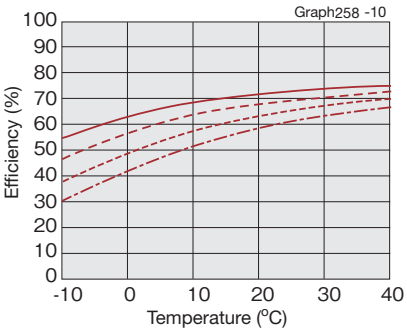

Reduction ratio 50

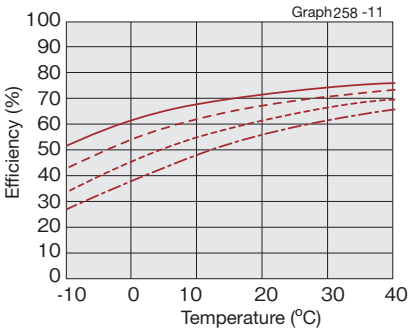

Reduction ratio 80 and 100

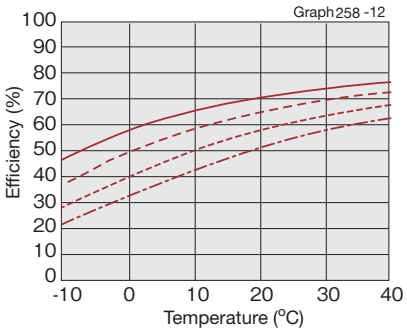

Input rotational speed — 500r/min — 1000r/min — 2000r/min — 3500r/min

On no-load running torque

No-load running torque means the torque required to put HarmonicDrive® under a no-load condition.
* Contact us for detailed value.

Measuring condition

Table 259-1

Reduction ratio 100			
Lubrication condition	Grease lubrication	Name	Harmonic grease® SK-2
The torque value is the value after a trial run for two hours or longer at an input of 2000 r/min.			

■Correction quantity by reduction

The no-load running torque of HarmonicDrive® varies depending on the reduction ratio. Graphs 259-1 to 259-4 show the values for a reduction ratio of 100. Obtain other reduction ratios by adding the correction quantity shown in the right-hand table (Table 259-2).

Correction quantity for the no-load running torque

Table 259-2
Unit: cN·m

Model \ Reduction ratio	30	50	80
5	0.26	0.11	—
8	0.44	0.19	—
11	0.81	0.36	—
14	1.33	0.58	0.1

■No-load running torque for a reduction ratio of 100

Input rotational speed: 500r/min

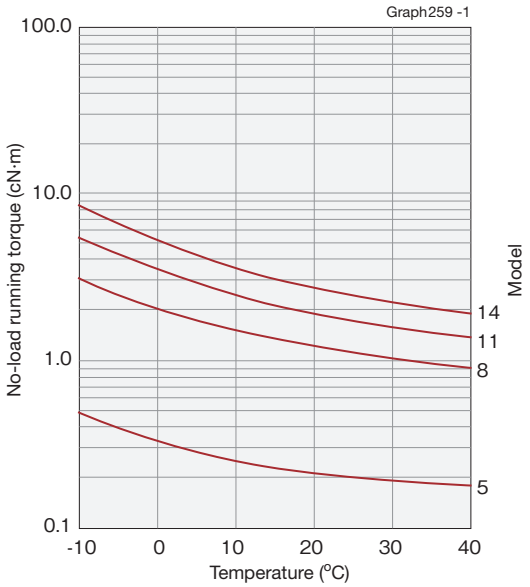

Input rotational speed: 1000r/min

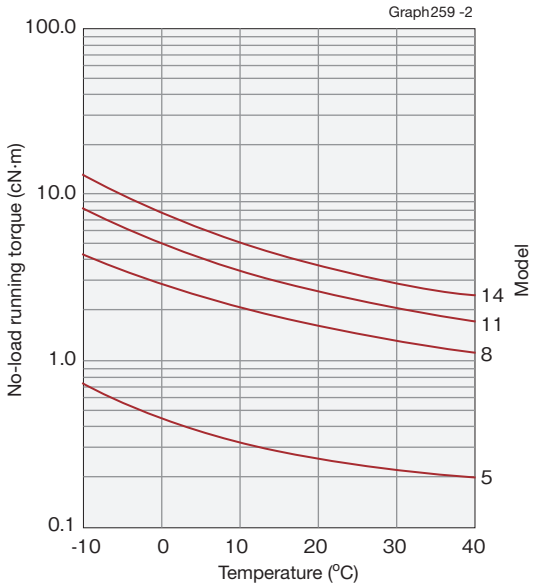

Input rotational speed: 2000r/min

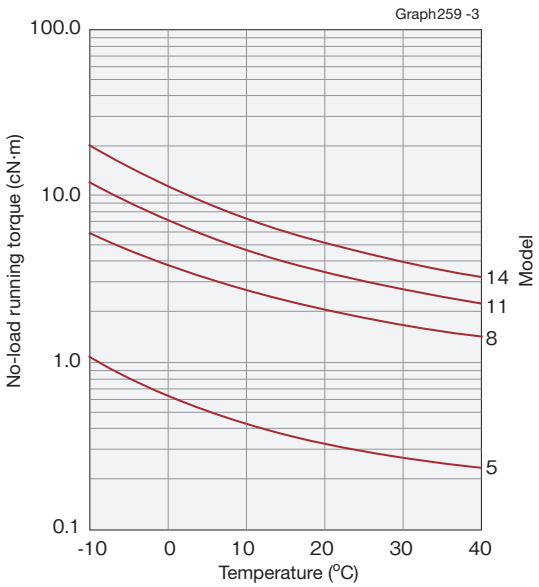

Input rotational speed: 3500r/min

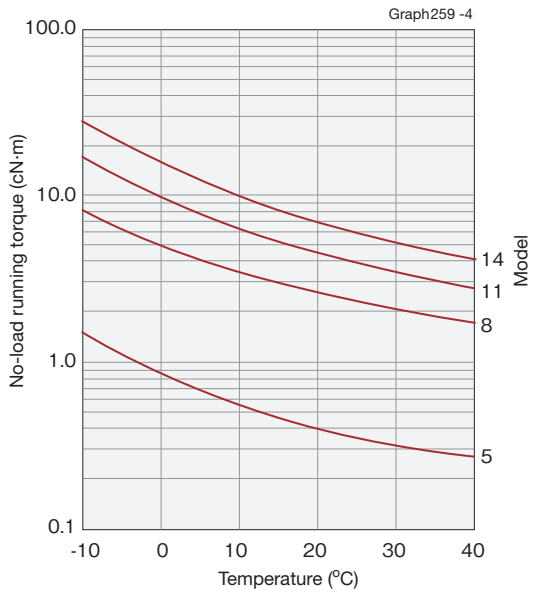

*The values in this graph are average values ($\bar{X}$).

Permissible load of the input part

■Permissible load of the input shaft

The input part of the input shaft type is supported by two single-row deep-groove bearings. Check the load applied to the input part to fully bring out the performance of the input shaft type. Figure 260-1 shows the supporting point of the bearing. See Table 260-1 for the size of (a) and (b). Graph 260-1 shows the relation between the maximum permissible radial load and the thrust load by the model number.
The values in Graph 260-1 are those assuming that the average input rotational speed is 2,000 r/min and the basic rated life, L_{10}, is 7,000 hours.

Example: When an 8-N thrust load (Fa) is applied to the input shaft of model number 14, the value of the maximum permissible radial load (Fr) is 20 N.

*For structural reasons, the input shaft moves in the axial direction when the external force is applied to it. However, it is not a malfunction.

Bearing specifications of the input part

Table 260-1

Model	Bearing A			Bearing B			Distance between bearings a	Overhang length of the input shaft b	Maximum radial load
	Model	Basic dynamic rated load	Basic static rated load	Model	Basic dynamic rated load	Basic static rated load			
		Cr (N)	Cor (N)		Cr (N)	Cor (N)	a (mm)	b (mm)	Fr (N)
5	SSLF-630DD	196	59	L-520WO2	176	54	10.8	9.25	8
8	MR126	715	292	MR83	560	170	16.65	18	10
11	689	1330	665	624	1300	485	20.6	21.9	20
14	6900ZZ	2700	1270	605ZZ	1330	505	28.25	24.25	30

Supporting point of the roller bearing

Fig. 260-1

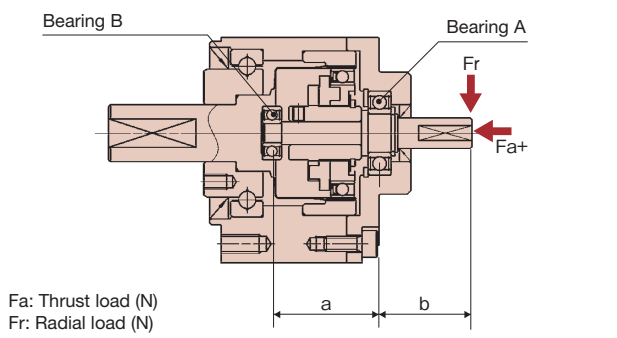

Relation between the radial load and the thrust load

Graph 260-1

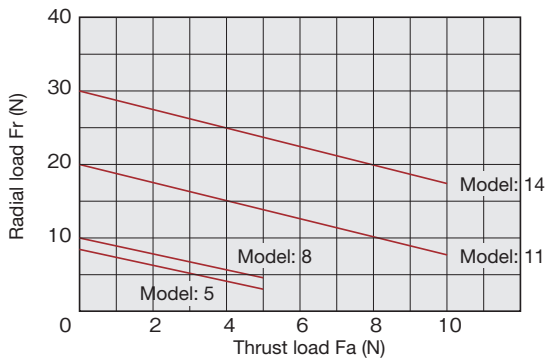

Installation and transmission torque

■ Installation on the equipment

Check the flatness of the mounting face and burrs on the tap to install the CSF-mini series on the equipment, and tighten the mounting flange (A in Figure 261-1) with bolts.

Tightening torque of the bolt* of the mounting flange (A in Figure 261-1)

Table 260-2

Item \ Model		5	8	11	14
Number of bolts		4	4	4	4
Bolt size		M2	M3	M4	M5
Mounting P.C.D.	mm	23	35	46	58
Tightening torque	N·m	0.25	0.85	2.0	3.96
	kgf·m	0.03	0.09	0.20	0.40
Min. length of engagement of the screw	mm	2.4	3.6	4.8	6.0
Transmission torque	N·m	3.5	12	29	57
	kgf·m	0.4	1.3	2.9	5.9

* Recommended bolt name: JIS B 1176 hexagonal bolt, intensity type: JIS B 1051 12.9 or more.

Mounting flange

Fig. 261-1

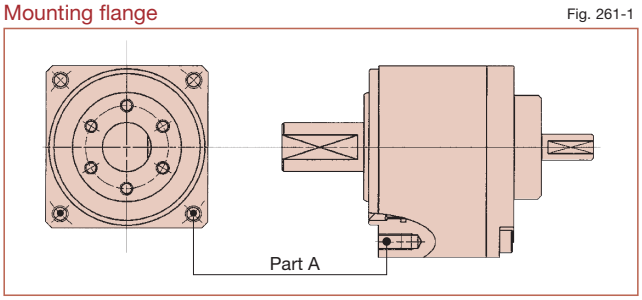

■Installation of the load on the output part

Install the load on the output part taking the specifications of the main roller bearing (see Page 253) into consideration.

Tightening torque of the bolt* of the mounting flange (B in Figure 261-2)

Table 261-1

Item \ Model		5	8	11	14
Number of bolts		3	4	6	6
Bolt size		M2	M3	M3	M4
Mounting P.C.D.	mm	9.8	15.5	20.5	25.5
Tightening torque	N·m	0.54	2.0	2.0	4.6
	kgf·m	0.06	0.20	0.20	0.47
Transmission torque	N·m	2	13	26	55
	kgf·m	0.3	1.3	2.6	5.6

As measures have been taken against oil leakage of the output flange, no sealing agent needs to be applied.
*Recommended bolt name: JIS B 1176 hexagonal bolt, intensity type: JIS B 1051 12.9 or more.

Mounting flange (1U-F)

Fig. 261-2

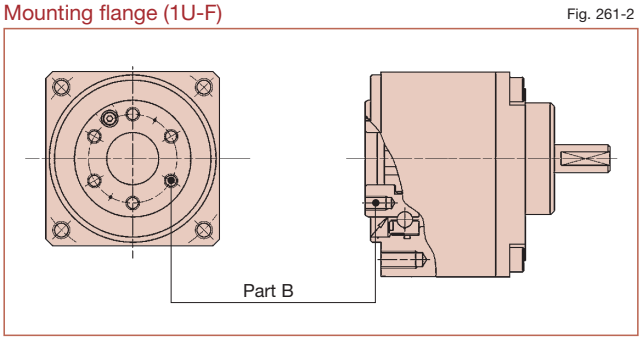

Do not allow the output shaft to receive a shock when you install a pulley and pinion. It can deteriorate the precision of the reducer and cause failure.

Technical data of motor mounting type

Shaft output: outline drawing of 1U-CC

The motor mounting type: the outline is 1U shape, and the output part is the shaft output.
You can download the CAD data (DXF) of this product from the following homepage.
URL: https://www.hds.co.jp/

Fig. 262-1

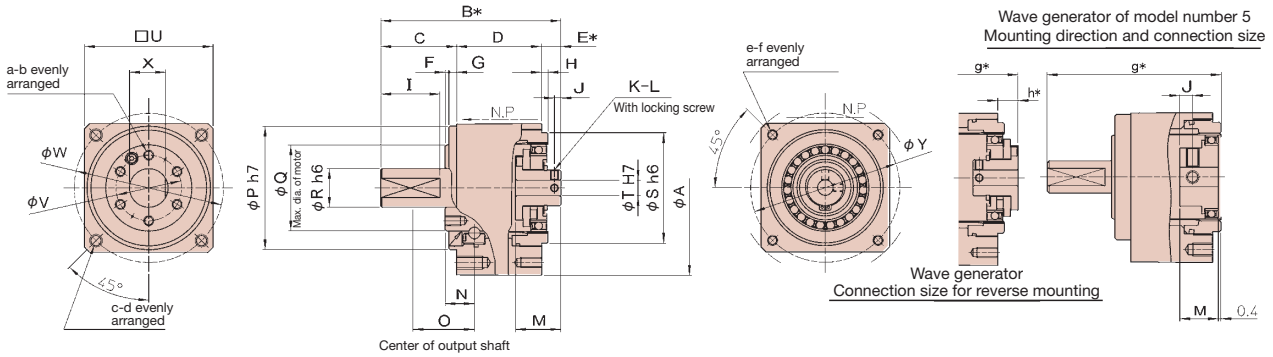

* Check the delivered specifications for details of the sizes. * See Fig. 040-3 on Page 040 for the shapes of the wave generator.
* The allowance varies depending on the part manufacturing method (cast or machined products).
Contact us if the allowance is not described in the dimensions and is required.

Measurement table

Table 262-1
Unit: mm

Symbol \ Model	5	8	11	14
ϕA	26.5	40	54	68
B*	30.5	51	64.3	70
C	13	23	29.5	29.5
D	12.7	21.5	26.5	33
E*	$4.8^{0}_{-0.2}$	$6.5^{0}_{-0.3}$	$8.3^{0}_{-0.7}$	$7.5^{0}_{-0.8}$
F	0.5	0.5	0.5	1.5
G	2.5	2.5	3	3
H	1.3	1.5	2	2.5
I	9	18	21.5	23
J	2	2	3	2.5
K	2	2	2	2
L	M2×3	M2×3	M3×4	M3×4
M	6	12	16	17.6
N	4.85	7.3	9	11.4
O	9.85	17.3	22	23.9
ϕP h7	19.5	29	39	48
ϕQ	13	20	26.5	33.5
ϕR h6	5	9	12	15
ϕS h6	17	26	35	43
ϕT H7	3	3	5	6
□U	20.4±0.42	30.7±0.46	40.9±0.5	51.1±0.5
ϕV	9.8	15.5	20.5	25.5
ϕW	23	35	46	58
X	4.6	8	10.5	14
ϕY	22.5	34	46	58
a	3	4	6	6
b	M2×3	M3×4	M3×5	M4×6
c	4	4	4	4
d	M2×3	M3×6	M4×8	M5×10
e	4	4	4	4
f	M2×3	M2.5×5	M3×6	M4×8
g*	27	48.7	62.1	70.4
h*	—	$4.2^{0}_{-0.3}$	$6.1^{0}_{-0.7}$	$7.9^{0}_{-0.8}$
Mass (g)	27	111	176	335

● The B, E, g and h dimensions indicated by an asterisk are the mounting positions in the shaft direction and allowance of the three parts (wave generator, flexspline, circular spline) comprising HarmonicDrive®. Strictly observe these sizes as they affect the performance and intensity.

● Wave generator is removed when the product is delivered.

Flange output: outline drawing of 1U-CC-F

The motor mounting type: the outline is 1U shape, and the output part is the flange output.
You can download the CAD data (DXF) of this product from the following homepage.
URL: https://www.hds.co.jp/

Fig. 263-1

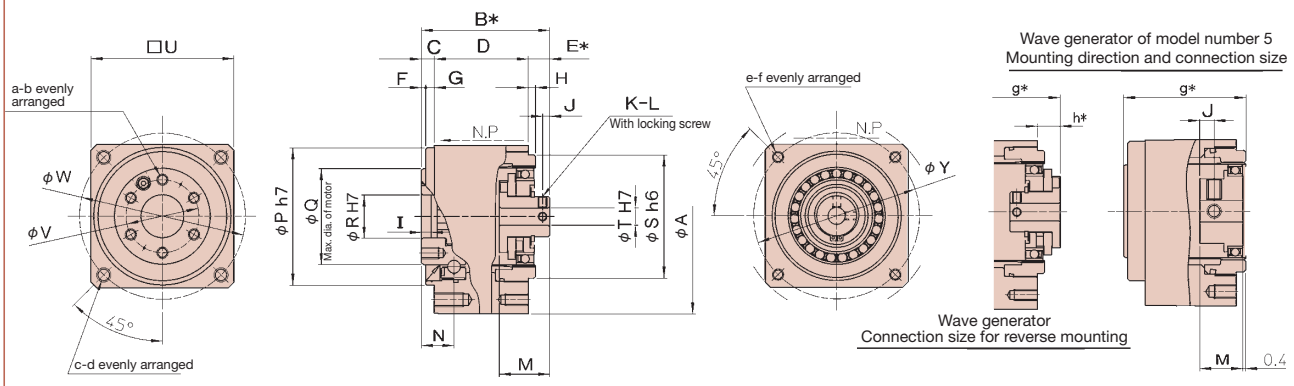

* Check the delivered specifications for details of the sizes. * See Fig. 040-3 on Page 040 for the shapes of the wave generator.
* The allowance varies depending on the part manufacturing method (cast or machined products).
Contact us if the allowance is not described in the dimensions and is required.

Measurement table

Table 263-1
Unit: mm

Symbol \ Model	5	8	11	14
φA	26.5	40	54	68
B*	20.5	31	38.3	45
C	3	3	3.5	4.5
D	12.7	21.5	26.5	33
E*	$4.8^{0}_{-0.2}$	$6.5^{0}_{-0.3}$	$8.3^{0}_{-0.7}$	$7.5^{0}_{-0.8}$
F	0.5	0.5	0.5	1.5
G	2.5	2.5	3	3
H	1.3	1.5	2	2.5
I	1.7	2.2	2.5	3.5
J	2	2	3	2.5
K	2	2	2	2
L	M2×3	M2×3	M3×4	M3×4
M	6	12	16	17.6
N	4.85	7.3	9	11.4
φP h7	19.5	29	39	48
φQ	13	20	26.5	33.5
φR H7	5	9	12	15
φS h6	17	26	35	43
φT H7	3	3	5	6
□U	20.4±0.42	30.7±0.46	40.9±0.5	51.1±0.5
φV	9.8	15.5	20.5	25.5
φW	23	35	46	58
φY	22.5	34	46	58
a	3	4	6	6
b	M2×3	M3×4	M3×5	M4×6
c	4	4	4	4
d	M2×3	M3×6	M4×8	M5×10
e	4	4	4	4
f	M2×3	M2.5×5	M3×6	M4×8
g*	17	28.7	36.1	45.4
h*	—	$4.2^{0}_{-0.3}$	$6.1^{0}_{-0.7}$	$7.9^{0}_{-0.8}$
Mass (g)	25	100	150	295

● The B, E, g and h dimensions indicated by an asterisk are the mounting positions in the shaft direction and allowance of the three parts (wave generator, flexspline, circular spline) comprising HarmonicDrive®. Strictly observe these sizes as they affect the performance and intensity.

● Wave generator is removed when the product is delivered.

Flange output: outline drawing of 2XH-F

The motor mounting type, and the output part is the flange output.
You can download the CAD data (DXF) of this product from the following homepage.
URL: https://www.hds.co.jp/

Fig. 264-1

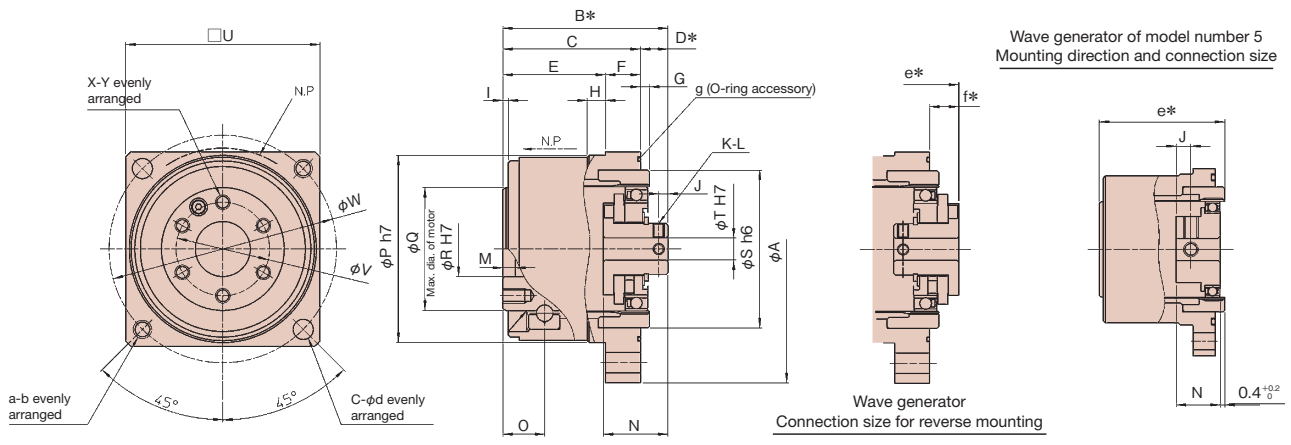

* Check the delivered specifications for details of the sizes. * See Fig. 040-3 on Page 040 for the shapes of the wave generator.
* The allowance varies depending on the part manufacturing method (cast or machined products).
Contact us if the allowance is not described in the dimensions and is required.

Measurement table

Table 264-1
Unit: mm

Symbol \ Model	5	8	11	14
ϕA	29	43.5	58	73
B*	20.5	31	38.3	45
C	15.7	24.5	30	37.5
D*	$4.8^{0}_{-0.2}$	$6.5^{0}_{-0.3}$	$8.3^{0}_{-0.7}$	$7.5^{0}_{-0.8}$
E	12.7	19	23.5	28
F	3	5.5	6.5	9.5
G	1.3	1.5	2	2.5
H	2	3	3	5
I	0.5	0.5	0.5	1.5
J	2	2	3	2.5
K	2	2	2	2
L	M2×3	M2×3	M3×4	M3×4
M	1.7	2.2	2.5	3.5
N	6	12	16	17.6
O	4.85	7.3	9	11.4
ϕP h7	20.5	31	40.5	51
ϕQ	13	20	26.5	33.5
ϕR H7	5	9	12	15
ϕS h6	17	26	35	43
ϕT H7	3	3	5	6
□U	22±0.42	32±0.46	43±0.50	53±0.50
ϕV	9.8	15.5	20.5	25.5
ϕW	25	37.5	50	62
X	3	4	6	6
Y	M2×3	M3×4	M3×5	M4×6
a	2	2	2	2
b	M2	M3	M4	M5
c	2	2	2	2
ϕd	2.3	3.4	4.5	5.5
e*	17	28.7	36.1	45.4
f*	—	$4.2^{0}_{-0.3}$	$6.1^{0}_{-0.7}$	$7.9^{0}_{-0.8}$
g (accessory)	18.9×0.7	28.2×1.0	38.0×1.5	48.0×1.0
Mass (g)	25	100	150	295

● The B, D, e and f dimensions indicated by an asterisk are the mounting positions in the shaft direction and allowance of the three parts (wave generator, flexspline, circular spline) comprising HarmonicDrive®. Strictly observe these sizes as they affect the performance and intensity.

● Wave generator is removed when the product is delivered.

Shaft output: outline drawing of 2XH-J

The motor mounting type, and the output part is the shaft output.
You can download the CAD data (DXF) of this product from the following homepage.
URL: https://www.hds.co.jp/

Fig. 265-1

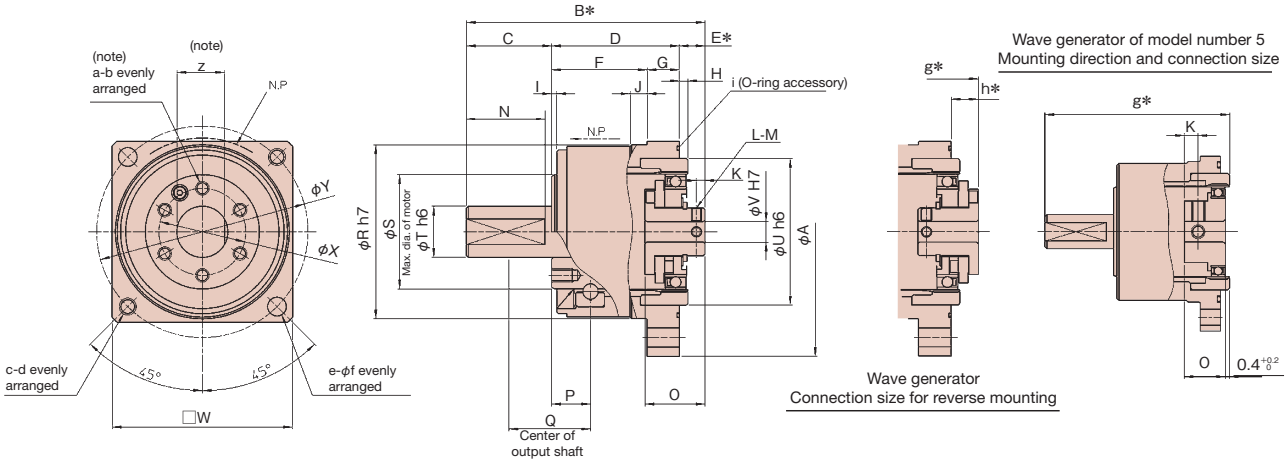

(Note) There is no position relationship with D cut of output shaft (low-speed shaft) and a-b tap. Be careful when it is used.

* Check the delivered specifications for details of the sizes.
* See Fig. 040-3 on Page 040 for the shapes of the wave generator.
* The allowance varies depending on the part manufacturing method (cast or machined products). Contact us if the allowance is not described in the dimensions and is required.

Measurement table

Table 265-1
Unit: mm

Symbol \ Model	5	8	11	14
ϕA	29	43.5	58	73
B*	30.5	51	64.3	70
C	10	20	26	25
D	15.7	24.5	30	37.5
E*	$4.8^{0}_{-0.2}$	$6.5^{0}_{-0.3}$	$8.3^{0}_{-0.7}$	$7.5^{0}_{-0.8}$
F	12.7	19	23.5	28
G	3	5.5	6.5	9.5
H	1.3	1.5	2	2.5
I	0.5	0.5	0.5	1.5
J	2	3	3	5
K	2	2	3	2.5
L	2	2	2	2
M	M2×3	M2×3	M3×4	M3×4
N	9	18	21.5	23
O	6	12	16	17.6
P	4.85	7.3	9	11.4
Q	9.85	17.3	22	23.9
ϕR h7	20.5	31	40.5	51
ϕS	13	20	26.5	33.5
ϕT h6	5	9	12	15
ϕU h6	17	26	35	43
ϕV H7	3	3	5	6
□W	22±0.42	32±0.46	43±0.50	53±0.50
ϕX	9.8	15.5	20.5	25.5
ϕY	25	37.5	50	62
Z	4.6	8	10.5	14
a	3	4	6	6
b	M2×3	M3×4	M3×5	M4×6
c	2	2	2	2
d	M2	M3	M4	M5
e	2	2	2	2
ϕf	2.3	3.4	4.5	5.5
g*	27	48.7	62.1	70.4
h*	—	$4.2^{0}_{-0.3}$	$6.1^{0}_{-0.7}$	$7.9^{0}_{-0.8}$
i (accessory)	18.9×0.7	28.2×1.0	38.0×1.5	48.0×1.0
Mass (g)	27	111	176	335

● The B, E, g and h dimensions indicated by an asterisk are the mounting positions in the shaft direction and allowance of the three parts (wave generator, flexspline, circular spline) comprising HarmonicDrive®. Strictly observe these sizes as they affect the performance and intensity.

● Wave generator is removed when the product is delivered.

Hole diameter size of the wave generator of the motor mounting type

You can change the hole diameter size of the wave generator of the motor mounting type within the range shown in the following table to match the shaft diameter of the mounting motor.

Table 266-1
Unit: mm

Symbol \ Model	5	8	11	14
2XH-F:ϕT H7 2XH-J:ϕVH7 1U-CC-F:ϕT H7 1U-CC:ϕT H7	1.5 to 6	2 to 4 (2 to 8)	3 to 7 (3 to 8)	4 to 8 (4 to 10)

(Note) 1. The parenthesized value indicates the value for the rigid-type (integral type, special specifications) wave generator. The standard wave generator is equipped with Oldham's coupling (self-aligning) mechanism. Note that the rigid type is standard for model number 5.
2. The size of the locking screw may be changed due to the hole diameter.
3. The key groove may be fabricated depending on the hole diameter.
4. Special specifications apply to all changes of the hole diameter size. Contact our office for details of the sizes.

Rigidity (spring constant)

See "Engineering data" for a description of terms.

Table 266-2

Symbol \ Model			5		8		11		14	
			2XH-J/1U-CC	2XH-F/1U-CC-F	2XH-J/1U-CC	2XH-F/1U-CC-F	2XH-J/1U-CC	2XH-F/1U-CC-F	2XH-J/1U-CC	2XH-F/1U-CC-F
T_1		N·m	0.075		0.29		0.80		2.0	
		kgf·m	0.0077		0.030		0.082		0.20	
T_2		N·m	0.22		0.75		2.0		6.9	
		kgf·m	0.022		0.077		0.20		0.70	
Reduction ratio 30	K_1	$\times10^4$N·m/rad	0.009	0.010	0.031	0.034	0.077	0.084	0.172	0.188
		kgf·m/arc-min	0.003	0.003	0.009	0.010	0.023	0.025	0.051	0.056
	K_2	$\times10^4$N·m/rad	0.011	0.013	0.039	0.044	0.109	0.124	0.210	0.235
		kgf·m/arc-min	0.003	0.004	0.012	0.013	0.032	0.037	0.063	0.070
	K_3	$\times10^4$N·m/rad	0.012	0.016	0.046	0.054	0.134	0.158	0.286	0.335
		kgf·m/arc-min	0.004	0.005	0.014	0.016	0.040	0.047	0.085	0.100
	θ_1	$\times10^{-4}$rad	8.7	7.5	9.5	8.6	10	9.5	12	11
		arc-min	3.0	2.6	3.2	3.0	3.6	3.3	4.0	3.6
	θ_2	$\times10^{-4}$rad	22	19	21	19	21	19	35	31
		arc-min	7.5	6.4	7.3	6.6	7.4	6.6	12	11
Reduction ratio 50	K_1	$\times10^4$N·m/rad	0.011	0.013	0.039	0.044	0.177	0.221	0.286	0.335
		kgf·m/arc-min	0.003	0.004	0.012	0.013	0.053	0.066	0.085	0.100
	K_2	$\times10^4$N·m/rad	0.014	0.018	0.056	0.067	0.225	0.300	0.378	0.468
		kgf·m/arc-min	0.004	0.005	0.017	0.020	0.067	0.089	0.113	0.140
	K_3	$\times10^4$N·m/rad	0.017	0.025	0.067	0.084	0.236	0.320	0.440	0.568
		kgf·m/arc-min	0.005	0.007	0.020	0.025	0.070	0.095	0.131	0.170
	θ_1	$\times10^{-4}$rad	6.9	5.6	7.5	6.6	4.5	3.6	7.0	6.0
		arc-min	2.4	2.0	2.6	2.3	1.6	1.2	2.4	2.0
	θ_2	$\times10^{-4}$rad	18	14	16	14	9.9	7.6	20	16
		arc-min	6.0	4.8	5.4	4.7	3.4	2.6	6.8	5.6
Reduction ratio 80 or more	K_1	$\times10^4$N·m/rad	0.015	0.020	0.072	0.090	0.206	0.267	0.378	0.468
		kgf·m/arc-min	0.004	0.006	0.021	0.027	0.061	0.079	0.113	0.140
	K_2	$\times10^4$N·m/rad	0.018	0.027	0.080	0.104	0.243	0.333	0.460	0.601
		kgf·m/arc-min	0.005	0.008	0.024	0.031	0.072	0.099	0.137	0.179
	K_3	$\times10^4$N·m/rad	0.020	0.030	0.089	0.120	0.291	0.432	0.516	0.700
		kgf·m/arc-min	0.006	0.009	0.027	0.036	0.086	0.128	0.154	0.209
	θ_1	$\times10^{-4}$rad	5.0	3.7	4.1	3.2	3.9	3.0	5.3	4.3
		arc-min	1.7	1.3	1.4	1.1	1.3	1.0	1.8	1.5
	θ_2	$\times10^{-4}$rad	13	9.2	9.8	7.7	8.8	6.6	16	12
		arc-min	4.4	3.1	3.4	2.6	3.0	2.3	5.4	4.2

* The values in this table are reference values. The lower-limit value is approximately 80% of the displayed value.

Mechanical precision

CSF-mini series have four-point contact ball bearing of high precision on main shaft bearing, and realized the high mechanical precision of output part. The mechanical precision of the output shaft and output flange is shown below.

Shaft output

Fig. 267-1

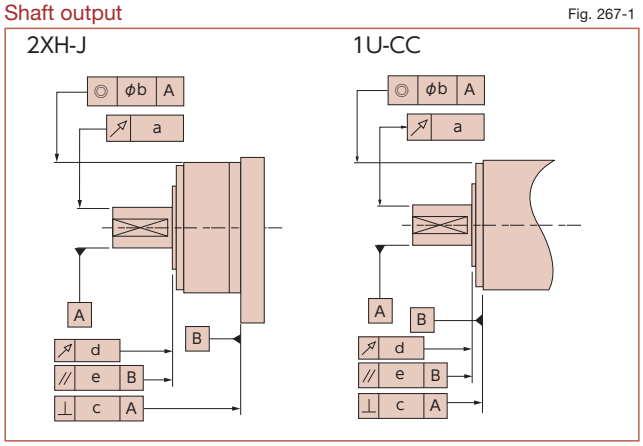

Flange output

Fig. 267-2

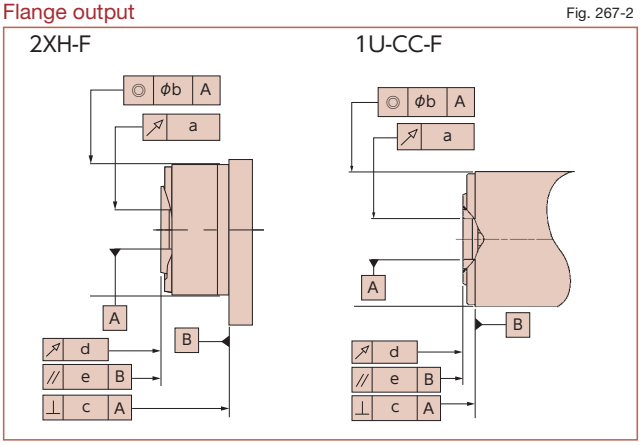

Mechanical precision

Table 267-1
*T.I.R.Unit: mm

Symbol	Precision item \ Model	5		8		11		14	
		2XH-J/1U-CC	2XH-F/1U-CC-F	2XH-J/1U-CC	2XH-F/1U-CC-F	2XH-J/1U-CC	2XH-F/1U-CC-F	2XH-J/1U-CC	2XH-F/1U-CC-F
a	Fluctuation on the edge of the output shaft	0.030	—	0.030	—	0.030	—	0.030	—
	Fluctuation on the inner diameter of the output shaft	—	0.005	—	0.005	—	0.005	—	0.005
b	Concentricity of the mounting spigot	0.040		0.040		0.055		0.055	
c	Squareness of the mounting face	0.020		0.020		0.025		0.025	
d	Fluctuation on the output flange face	0.005		0.005		0.005		0.005	
e	Parallelism of the mounting face and the output flange face	0.015		0.020		0.030		0.030	

* T.I.R.: This indicates the total reading of the dial gauge when the measuring part is rotated once.

Efficiency characteristics

The efficiency varies depending on the following conditions.

- Reduction ratio
- Input rotational speed
- Load torque
- Temperature
- Lubrication condition (Type of lubricant and the quantity)

Measuring condition

Table 267-2

Load torque	Rated torque in rating table (see Page 251)		
Lubricating condition	Grease lubrication	Name	Harmonic grease® SK-2
		Application qty.	Appropriate application quantity

■Efficiency correction coefficient

If the load torque is smaller than the rated torque, the efficiency value lowers. Obtain correction coefficient Ke from the efficiency correction coefficient Graph 267-1 to obtain the efficiency using the following example of calculation.

Example of calculation

Efficiency η (%) under the following condition is obtained from the example of CSF-8-100-2XH.

Input rotational speed: 1000 r/min

Load torque: 2.0 N·m

Lubrication method: Grease lubrication

Lubricant temperature: 20°C

Since the rated torque of model number 8 with a reduction ratio of 100 is 2.4 N·m (Ratings: Page 251), the torque ratio α is 0.83. (α=2.0/2.4≒0.83)

■The efficiency correction coefficient is Ke=0.99 from Graph 267-1.

■Efficiency η at load torque 2.0 N·m: η=Ke·η_R=0.99 x 77%=76%

* Efficiency correction coefficient Ke=1 holds when the load torque is greater than the rated torque.

Efficiency correction coefficient

Graph 267-1

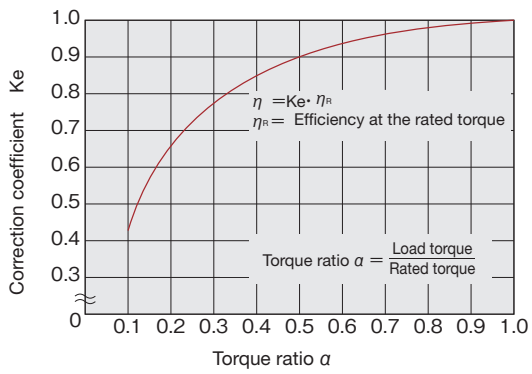

■Efficiency at rated torque

Mode No. 5

Reduction ratio 30

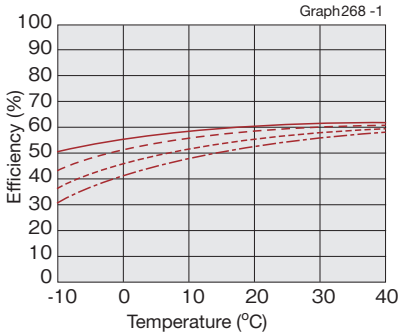

Reduction ratio 50

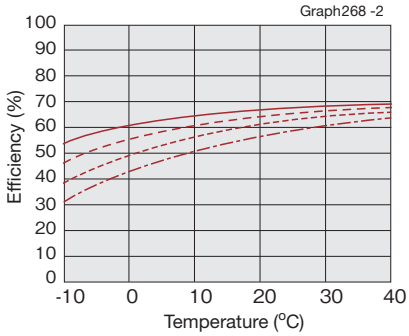

Reduction ratio 100

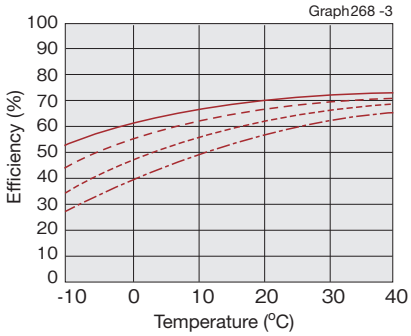

Mode No. 8

Reduction ratio 30

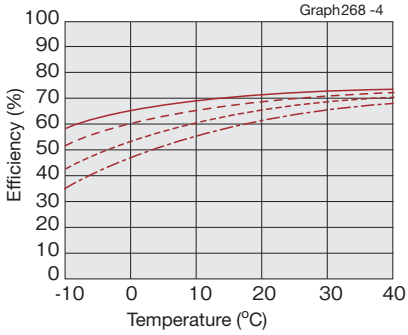

Reduction ratio 50

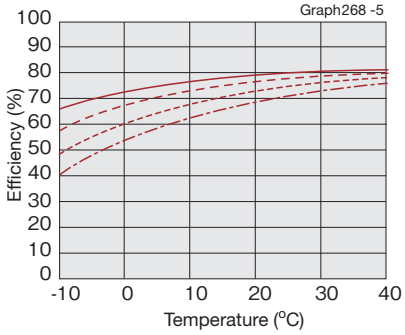

Reduction ratio 100

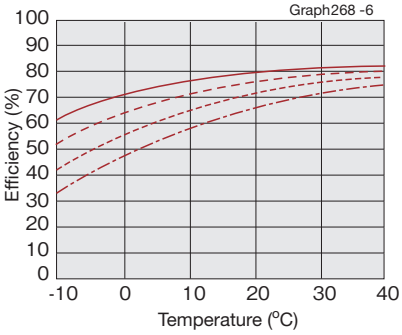

Mode No. 11

Reduction ratio 30

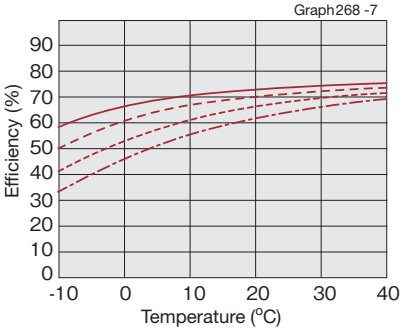

Reduction ratio 50

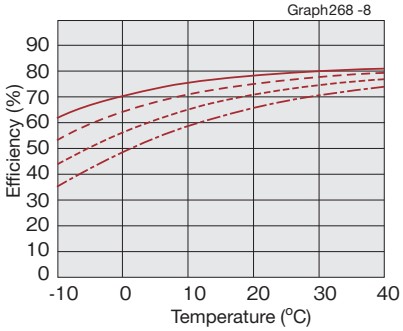

Reduction ratio 100

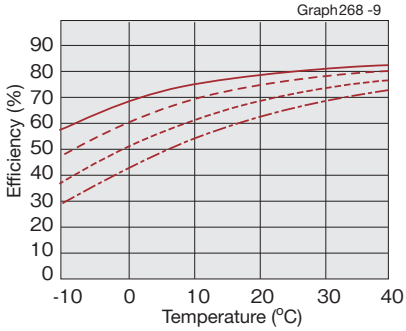

Mode No. 14

Reduction ratio 30

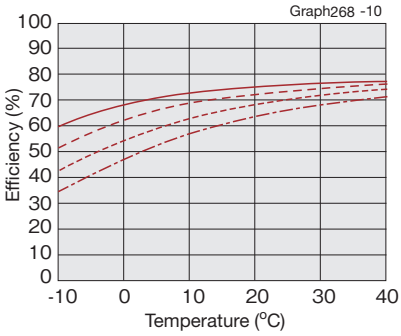

Reduction ratio 50

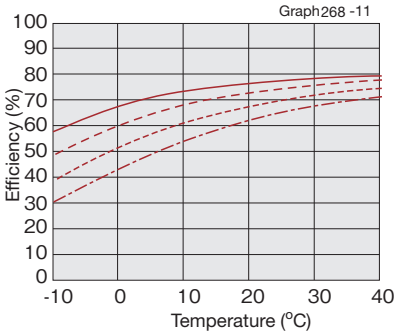

Reduction ratio 80 and 100

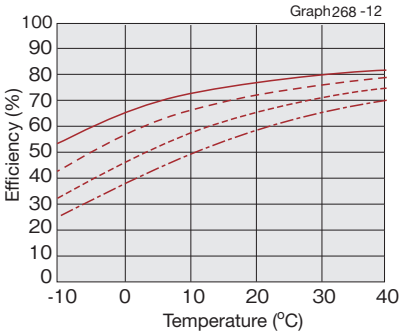

Input rotational speed — 500r/min — 1000r/min — 2000r/min — 3500r/min

On no-load running torque

No-load running torque means the torque on the input side (high-speed shaft side) required to put HarmonicDrive® under a no-load condition.

* Contact us for detailed value.

Measuring condition

Table 269-1

Reduction ratio 100			
Lubrication condition	Grease lubrication	Name	Harmonic grease® SK-2
The torque value is the value after a trial run for two hours or longer at an input of 2000 r/min.			

■Correction quantity by reduction

The no-load running torque of HarmonicDrive® varies depending on the reduction ratio. Graphs 269-1 to 269-4 show the values for a reduction ratio of 100. Obtain other reduction ratios by adding the correction quantity shown in the right-hand table (Table 269-2).

Correction quantity for the no-load running torque

Table 269-2
Unit: cN·m

Model \ Reduction ratio	30	50	80
5	0.26	0.11	—
8	0.44	0.19	—
11	0.81	0.36	—
14	1.33	0.58	0.1

■No-load running torque for a reduction ratio of 100

Input rotational speed: 500r/min

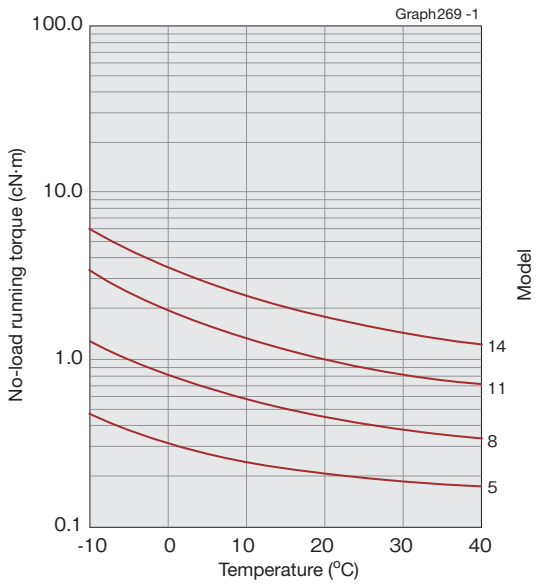

Input rotational speed: 1000r/min

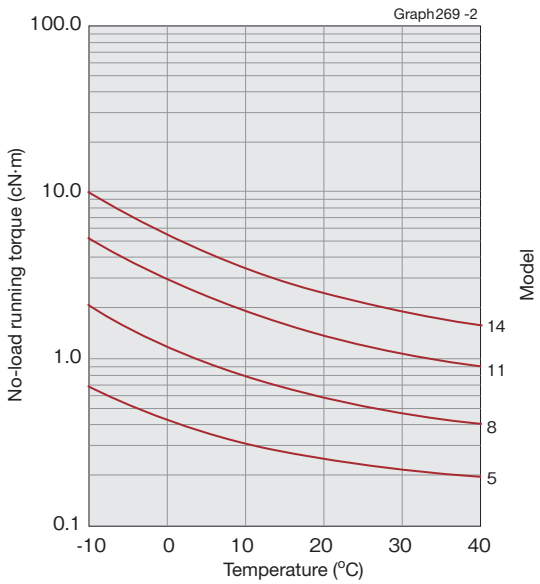

Input rotational speed: 2000r/min

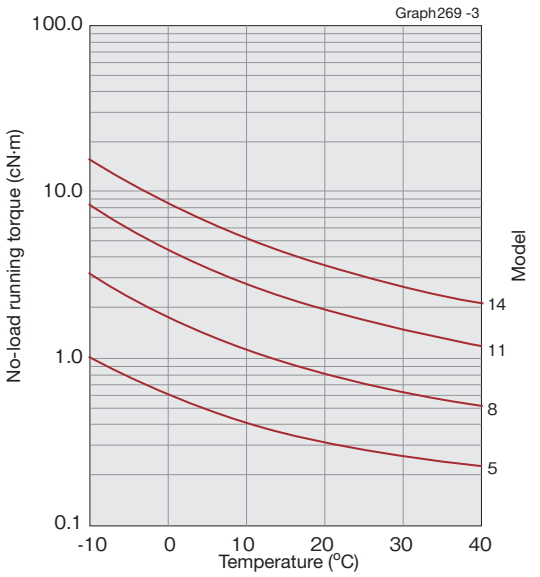

Input rotational speed: 3500r/min

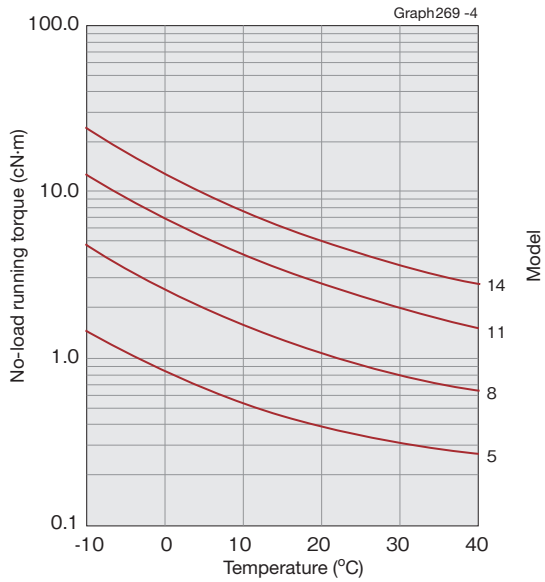

*The values in this graph are average values ($\bar{X}$).

Example of installation

The following shows an example of the representative installation of the motor mounting type.

Fig. 270-1

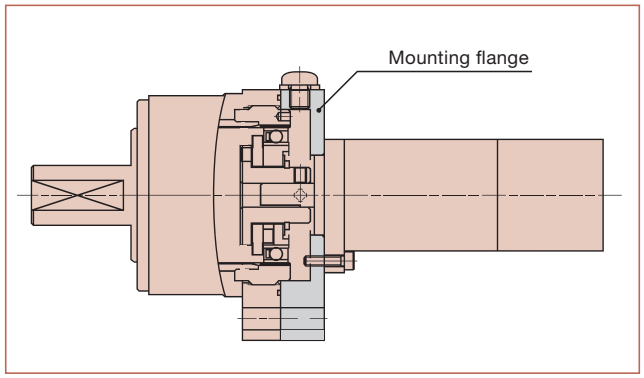

Fig. 270-2

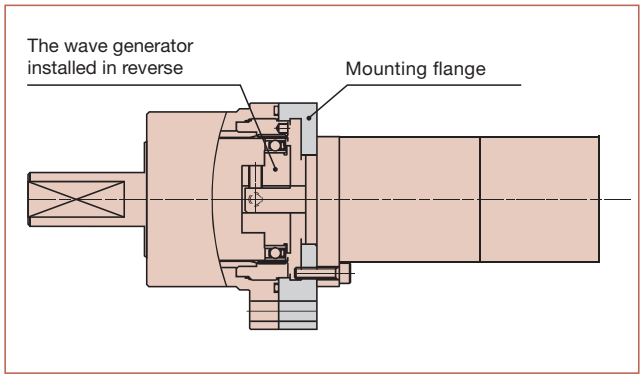

■Motor matching table

A combination of the motor mounting type and the small servo motor is shown below as a reference.
See “Engineering data” on Pages 014 to 015 for selecting detailed model numbers.

Table 270-1

Manufacturer series name	Σ mini series made by Yasukawa Electric				HC-AQ series made by Mitsubishi Electric			Minasu-S series made by Matsushita Electric
Model \ Motor capacity	3W•5W	10W	20W	30W	10W	20W	30W	30W
5	○							
8		○			○			
11			○	○		○	○	○
14				○			○	○

(Note) The shaft diameter of some motors may not fit the hole diameter of the standard wave generator. In this case, the hole diameter should be changed (hole diameter size: see Page 266). Changes to the hole diameter should be performed using special specifications.

Installation precision

Maintain the recommended precision shown in Figure 271-1 and Table 271-1 to fully bring out the excellent performance of HarmonicDrive® CSF-mini series for built-in design.

Recommended precision for mounting

Fig. 271-1

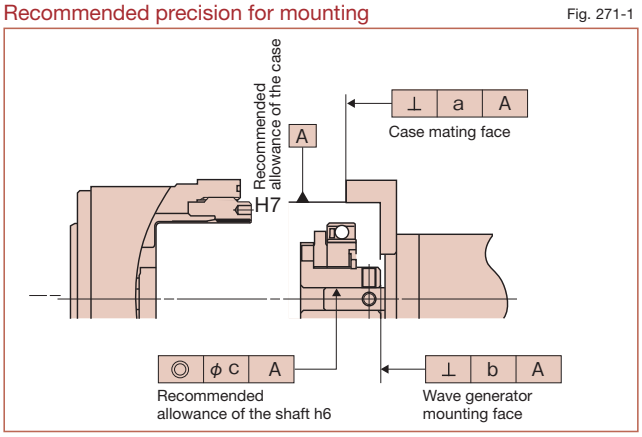

Recommended precision of the mounting case

Table 271-1
Unit: mm

Symbol	Precision item \ Model	5	8	11	14
a	Squareness of the case mating face	0.008	0.010	0.011	0.011
b	Mounting face of the wave generator	0.005	0.012	0.012	0.017
			(0.006)	(0.007)	(0.008)
c	Concentricity of the input shaft	0.005	0.015	0.015	0.030
			(0.006)	(0.007)	(0.016)

* The parenthesized value indicates the value for the rigid-type (integral type, special specifications) wave generator. The standard wave generator is equipped with Oldham's coupling (self-aligning) mechanism. Note that the rigid type is standard for model number 5.

Installation and transmission torque

■Installation on the equipment

Check the flatness of the mounting face and burrs on the tap to install the CSF-mini series on the equipment, and tighten the mounting flange with bolts.

Tightening torque of the bolt* of the mounting flange (A in Figure 273-1) /2XH type

Table 272-1

Item \ Model		5	8	11	14
Number of bolts		2	2	2	2
Bolt size		M2	M3	M4	M5
Mounting P.C.D.	mm	25	37.5	50	62
Tightening torque	N·m	0.25	0.85	2.0	4.0
	kgf·m	0.03	0.09	0.20	0.41
Min. length of engagement of the screw	mm	2.4	3.6	4.8	6.0
Transmission torque	N·m	2	7	16	31
	kgf·m	0.2	0.7	1.6	3.1

* Recommended bolt name: JIS B 1176 hexagonal bolt, intensity type: JIS B 1051 12.9 or more.
* Use a washer so that the bolt seating surface does not directly touch the aluminum.

Tightening torque of the bolt* of the mounting flange (A and C part in Figure 273-2) /1U-CC type

Table 272-2

Item \ Model		5		8		11		14	
		Part A	Part C	Part A	Part C	Part A	Part C	Part A	Part C
Number of bolts		4	4	4	4	4	4	4	4
Bolt size		M2	M2	M3	M2.5	M4	M3	M5	M4
Mounting P.C.D.	mm	23	22.5	35	34	46	46	58	58
Tightening torque	N·m	0.25	0.25	0.85	0.55	2.0	0.85	4.0	2.0
	kgf·m	0.03	0.03	0.09	0.06	0.20	0.09	0.41	0.20
Min. length of engagement of the screw	N·m	3	3	6	5	8	6	10	8
Transmission torque	N·m	3.5	—	12	—	29	—	57	—
	kgf·m	0.4	—	1.3	—	2.9	—	5.9	—

* Recommended bolt name: JIS B 1176 hexagonal bolt, intensity type: JIS B 1051 12.9 or more.

■Installation of the load on the output part

Install the load on the output part of the CSF-mini series taking the specifications of the main roller bearing (see Page 253) into consideration.

Tightening torque of the bolt* of the mounting flange (B in Figure 273-1 and Figure 273-2) (flange output type)

Table 273-1

Item \ Model		5	8	11	14
Number of bolts		3	4	6	6
Bolt size		M2	M3	M3	M4
Mounting P.C.D.	mm	9.8	15.5	20.5	25.5
Tightening torque	N·m	0.54	2.0	2.0	4.6
	kgf·m	0.06	0.20	0.20	0.47
Transmission torque	N·m	2	13	26	55
	kgf·m	0.3	1.3	2.6	5.6

As measures have been taken against oil leakage of the output flange, no sealing agent needs to be applied.

* Recommended bolt name: JIS B 1176 hexagonal bolt, intensity type: JIS B 1051 12.9 or more.

Mounting flange (2XH-F)

Fig. 273-1

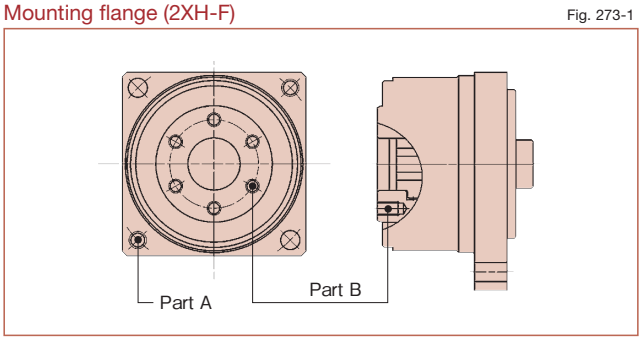

Mounting flange (1U-CC-F)

Fig. 273-2

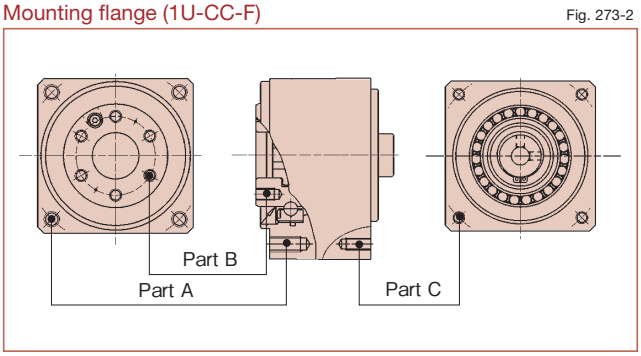

Do not allow the output shaft to receive a shock when you install a pulley and pinion with the shaft output. It can deteriorate the precision of the reducer and cause failure.

Sealing mechanism

The following sealing mechanism is required to prevent grease leakage and maintain the high durability of HarmonicDrive® for the motor mounting type.

- Flange mating face and mating ... O-ring and seal agent. Be careful of distortion on the plane and how the O-ring is engaged.
- Screw hole area ..... Use a screw lock agent (Locktite 242 is recommended) or sealing tape.

Area requiring sealing and recommended sealing methods

Table 274-1

Area requiring sealing		Recommended sealing method
Input side	Flange mating face	Use O-ring (attached to our product)
	Motor output shaft	Select one with an oil seal. Those without an oil seal should be structured so that an oil seal can be attached to the motor mounting flange.

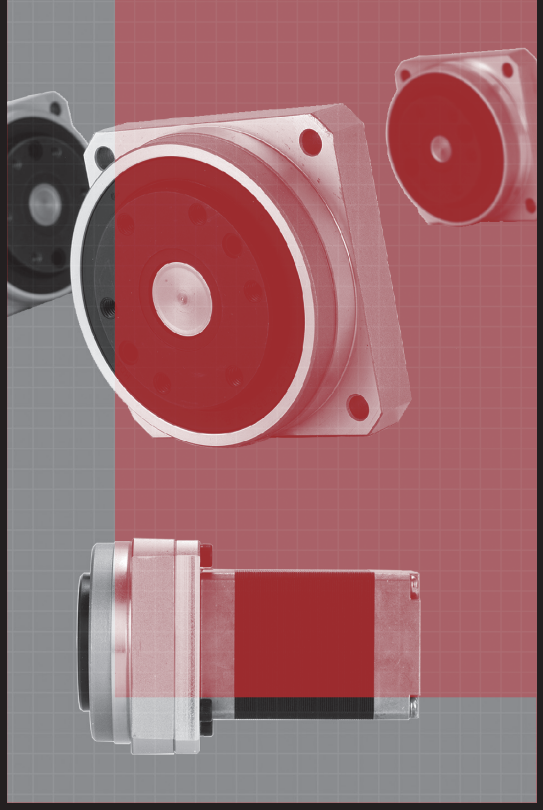

CSF-mini Series Ultra-Flat/High Stiffness Type

Unit Type CSF-mini

Features

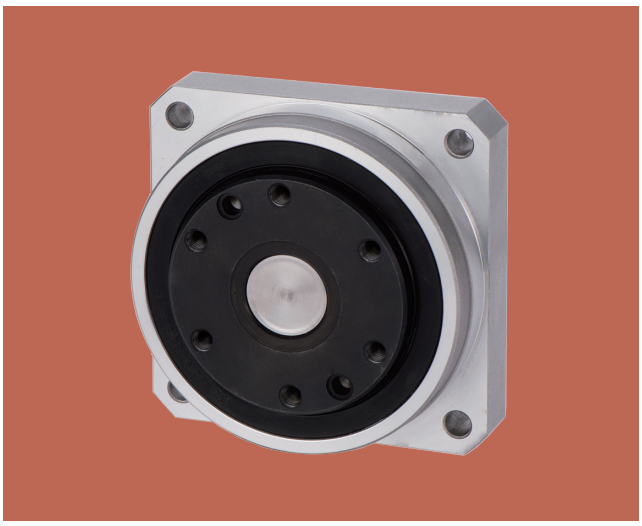

■CSF Mini Series Ultra-Flat/High Stiffness Type

The CSF Mini Series is a unitized version of the compact HarmonicDrive® model. It is lightweight, ultra-flat, and boasts high stiffness. Compared to the previous CSF Mini Series, these latest versions are much flatter, and achieve high stiffness due to the cross roller bearings used as the main roller bearings of the output section.
Consider using the product in the mechanized parts of compact machinery and compact and lightweight conveyor robots.

CSF Mini Series features

- ■Ultra-flat structure enables the design of compact machines and devices.
- ■Use of highly stiff cross roller bearings enables direct support of external loads.
- ■Mounting flanges available to match the motors you use.

Motor installation example

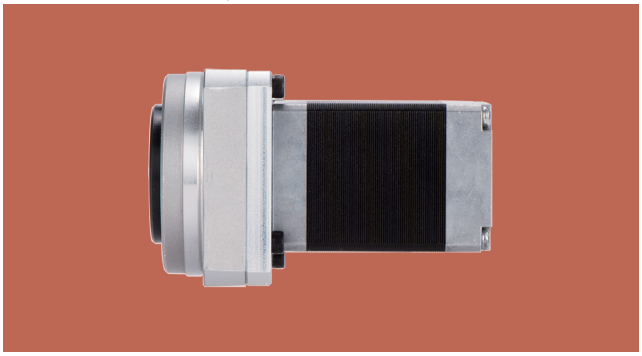

■Special specifications

Fig.276 -1

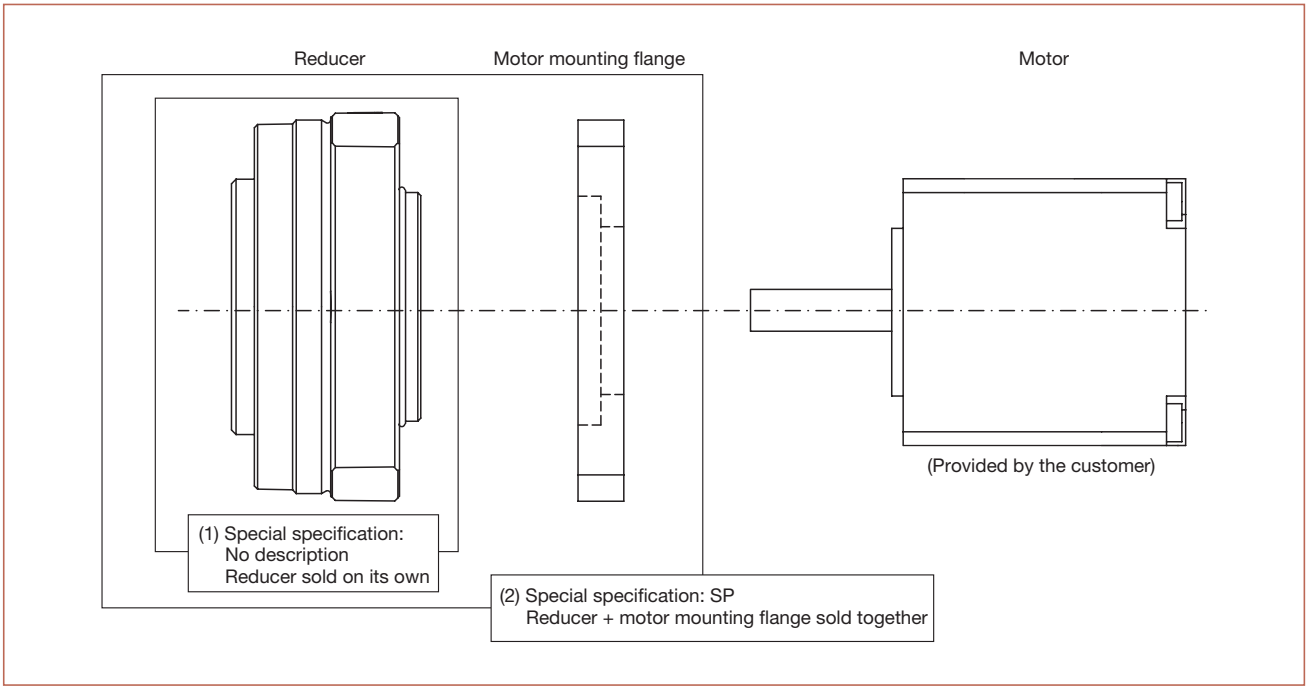

* As an option, we design and sell motor mounting flanges. When requesting a flange design, provide the required dimensions as per Drawing288-1 on P 288.
* Motor mounting flange and motor are assembled by the customer. When assembling, refer to P 285 to P 151.
* Special specification: SP includes other special specifications.

Model and Symbol

CSF - 14 - 100 - 2UP - SP

Table277 -1

Model name	Model	Reduction ratio			Model	Special Specification
						-
CSF Series	8	30	50	100	2UP (High stiffness type)	No description = Standard product SP = Special specification in form, performance (Optional flange, etc.)
	11	30	50	100		
	14	30	50	100		

Technical Data

Rating table

Table277 -2

Model	Reduction ratio	Rated torque at input 2000r/min	Peak torque at start/stop	Permissible max. value of ave. load torque	Instantaneous permissible max. torque	Permissible max. input rotational speed	Permissible ave. input rotational speed	Inertia moment (1 / 4GD^2)
		N·m	N·m	N·m	N·m	r/min	r/min	kg·cm^2
8	30	0.9	1.8	1.4	3.3	8500	3500	4.0×10^{-3}
	50	1.8	3.3	2.3	6.6			
	100	2.4	4.8	3.3	9.0			
11	30	2.2	4.5	3.4	8.5	8500	3500	1.5×10^{-2}
	50	3.5	8.3	5.5	17			
	100	5.0	11	8.9	25			
14	30	4.0	9.0	6.8	17	8500	3500	4.0×10^{-2}
	50	5.4	18	6.9	35			
	100	7.8	28	11	54			

* See “Engineering data” on Page 012 for details of the terms.

Angle transmission accuracy

See "Engineering data" for a description of terms.

Table 278-1

Reduction ratio	Model / Unit	8	11	14
30	$\times10^{-3}$rad	0.58	0.58	0.58
	arc-min	2.00	2.00	2.00
50 or more	$\times10^{-3}$rad	0.58	0.44	0.44
	arc-min	2.00	1.50	1.50

Hysteresis loss

See "Engineering data" for a description of terms.

Table 278-2

Reduction ratio	Model	8	11	14
30	$\times10^{-4}$rad	8.7	8.7	8.7
	arc-min	3.0	3.0	3.0
50	$\times10^{-4}$rad	5.8	5.8	5.8
	arc-min	2.0	2.0	2.0
100	$\times10^{-4}$rad	5.8	5.8	2.9
	arc-min	2.0	2.0	1.0

Starting torque

See "Engineering data" for a description of terms. As the values in the table below vary depending on the use conditions, use them as reference values.

Table 278-3
Unit: cN·m

Reduction ratio	Model	8	11	14
30		1.5	3.4	4.6
50		0.92	2.0	3.5
100		0.65	1.5	2.2

Overdrive starting torque

See "Engineering data" for a description of terms. As the values in the table below vary depending on the use conditions, use them as reference values.

Table 278-4
Unit: N·m

Reduction ratio	Model	8	11	14
30		0.70	1.7	2.4
50		0.55	1.2	1.6
100		0.75	1.5	1.8

Ratcheting torque

See "Engineering data" for a description of terms.

Table 278-5
Unit: N·m

Reduction ratio	Model	8	11	14
30		11	29	59
50		12	34	88
100		14	43	84

Buckling torque

See "Engineering data" for a description of terms.

Table 278-6
Unit: N·m

Model	8	11	14
All Ratios	35	90	190

Specification of the main roller bearing

The CSF Mini Series 2UP Type incorporates precision cross roller bearings that directly support external loads (output flange section). To fully realize the performance of the unit type, verify the maximum load moment load as well as the life and static safety coefficient of the cross roller bearings.
See the page 030 to 034 of “Engineering data” for each calculation formula.

■Checking procedure

(1) Checking the maximum load moment load (M*max*)

Obtain the maximum load moment load (M*max*). → Maximum load moment load (M*max*) ≦ permissible moment (Mc)

(2) Checking the life

Obtain the average radial load (Fr*av*) and the average axial load (Fa*av*). → Obtain the radial load coefficient (x) and the axial load coefficient (y). → Calculate the life and check it.

(3) Checking the static safety coefficient

Obtain the static equivalent radial load coefficient (Po). → Check the static safety coefficient. (fs)

■Main roller bearing specifications

Table279 -1

Model	Pitch circle dia. of a roller	Offset amount	Basic rated load		Permissible moment load	Moment rigidity
	dp	R	Basic dynamic rated load C	Basic static rated load Co	Mc	Km
	mm	mm	$\times 10^2$N	$\times 10^2$N	N·m	N·m/rad
8	35	12.9	58	80	15	2.0×10^4
11	42.5	14	65	99	40	4.0×10^4
14	54	14	74	128	75	8.0×10^4

* Basic dynamic rated load is the constant static radial load that results in a roller bearing basic rated life of 1 million rotations.
* Basic static rated load is the static load that imparts a certain level of contact stress (4kN/mm^2) in the center of the contact between the rolling element and race under maximum load.
* Permissible moment load is the value where operation is possible and basic performance is maintained when within the maximum moment load sustained by the output shaft.
* Moment stiffness is a reference value. The lower limit is about 80% of the value shown.

Lubrication

Grease lubricant is the standard lubrication method for the CSF Mini Series 2UP Type.
The product is shipped with grease applied. Additional grease or lubricant is not required during assembly. For lubrication, use the following grease.

Table279 -2

Lubricated area	Reducer	Main roller bearing
Lubricant name	Harmonic grease® SK-2	
Manufacturer	Harmonic Drive Systems Inc.	
Base oil	Refined oil	
Puffing agent	Lithium soap base	
Mixing consistency (25°C)	265 to 295	
Drop point	198°C	
Exterior	Green	

■External dimensions

Fig.280 -1

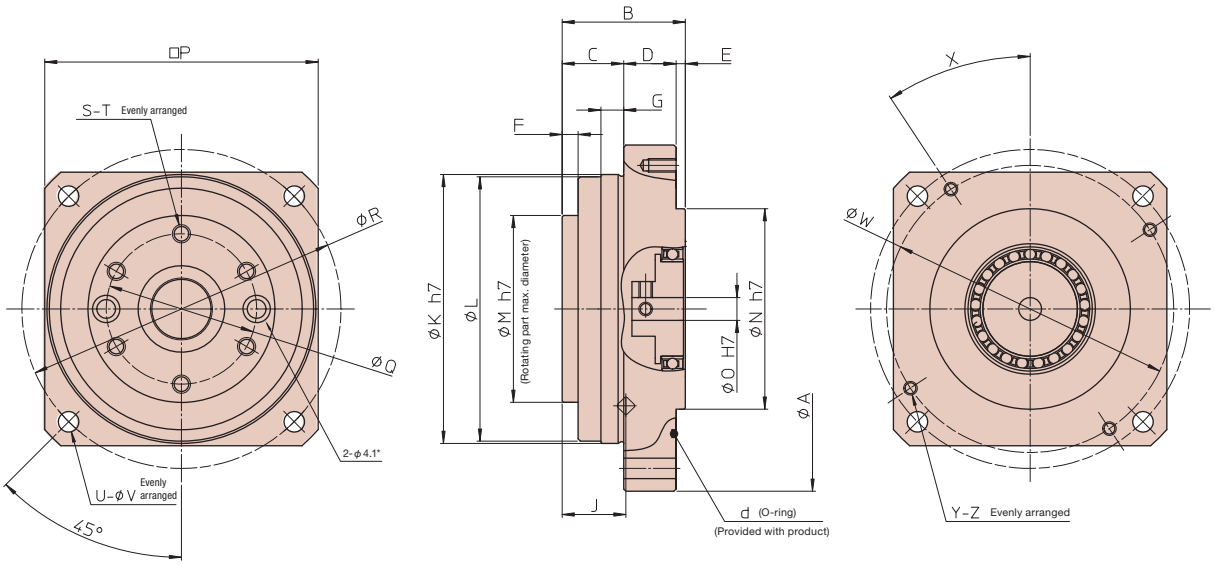

* 2-φ4.1 may be deformed or scratched as they are used during assembly at our factory. The accuracies of positional tolerance and other properties are not guaranteed.

■Measurement table

Table280 -1
Unit: mm

Symbol \ Model	8	11	14
φA	66	80	100
B	24.8	27	34
C	13	13.5	18.5
D	9	11.5	12
E	2.8	2	3
F	3	3.5	3.5
G	5	5	8
H*	$1.1^{0}_{-0.3}$	$1.6^{0}_{-0.7}$	$3.5^{0}_{-0.8}$
I	7.2	8.3	10.5
J	12.9	14	14
φK	49	59	74
φL	48	58	73
φM	33.5	41	52.5
φN	30	44	52
φO	5	5	8
□P	50±1	60±1	75±1
φQ	25.5	33	44
φR	58	70	88
S	6	6	6
T	M3×6	M4×5	M5×7
U	4	4	4
φV	3.5	4.5	5.5
φW	52	63	70.71
X	35°	33.5°	55°
Y	4	4	4
Z	M3×5	M3×6	M4×8
Mass (g)	200	330	620

■Wave generator installation dimensions enlarged view

Fig.280 -2

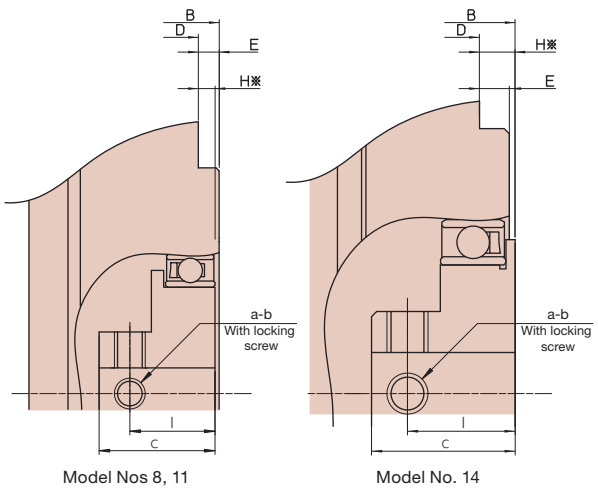

*The H dimension is the axial range and permitted tolerance of the three parts (wave generator, flexspline, and circular spline) that make up the structure of the HarmonicDrive®. Ensure this dimension is absolutely accurate, as it affects performance and strength.

Table280 -2

Symbol \ Model	8	11	14
a	2	2	2
b	M3×4	M3×4	M4×4
c	10.2	11.3	14
d	φ29.8 × 0.8	φ54.0 × 1.2	φ58.4 × 1.3

Hole diameter size of the wave generator

The Hole diameter size of the wave generator (P 280, Table 280-1 ϕO) can be changed within the ranges shown in the table below in order to accommodate the motor shaft.

Table281 -1
Unit: mm

Symbol \ Model	8	11	14
ϕ0 H7	2 to 8	3 to 8	4 to 10

* All changes to the hole diameter are a special specification.
  For details on hole dimensions, contact our sales office.
* Standard wave generators are rigid types (singe unit).
  Oldham types (self-centering mechanism) are special specifications.

Rigidity (spring constant)

See “Engineering data” for a description of terms.

Table 281-2

Symbol \ Model			8	11	14
	T_1	N·m	0.29	0.80	2.0
		kgf·m	0.030	0.082	0.20
	T_2	N·m	0.75	2.0	6.9
		kgf·m	0.077	0.20	0.70
Reduction ratio 30	K_1	$\times10^4$N·m/rad	0.034	0.084	0.188
		kgf·m/arc-min	0.010	0.025	0.056
	K_2	$\times10^4$N·m/rad	0.044	0.124	0.235
		kgf·m/arc-min	0.013	0.037	0.070
	K_3	$\times10^4$N·m/rad	0.054	0.158	0.335
		kgf·m/arc-min	0.016	0.047	0.100
	θ_1	$\times10^{-4}$rad	8.6	9.5	11
		arc-min	3.0	3.3	3.6
	θ_2	$\times10^{-4}$rad	19	19	31
		arc-min	6.6	6.6	11
Reduction ratio 50	K_1	$\times10^4$N·m/rad	0.044	0.221	0.335
		kgf·m/arc-min	0.013	0.066	0.100
	K_2	$\times10^4$N·m/rad	0.067	0.300	0.468
		kgf·m/arc-min	0.020	0.089	0.140
	K_3	$\times10^4$N·m/rad	0.084	0.320	0.568
		kgf·m/arc-min	0.025	0.095	0.170
	θ_1	$\times10^{-4}$rad	6.6	3.6	6.0
		arc-min	2.3	1.2	2.0
	θ_2	$\times10^{-4}$rad	14	7.6	16
		arc-min	4.7	2.6	5.6
Reduction ratio 100	K_1	$\times10^4$N·m/rad	0.090	0.267	0.468
		kgf·m/arc-min	0.027	0.079	0.140
	K_2	$\times10^4$N·m/rad	0.104	0.333	0.601
		kgf·m/arc-min	0.031	0.099	0.179
	K_3	$\times10^4$N·m/rad	0.120	0.432	0.700
		kgf·m/arc-min	0.036	0.128	0.209
	θ_1	$\times10^{-4}$rad	3.2	3.0	4.3
		arc-min	1.1	1.0	1.5
	θ_2	$\times10^{-4}$rad	7.7	6.6	12
		arc-min	2.6	2.3	4.2

* The values in this table are reference values. The lower-limit value is approximately 80% of the displayed value.

Mechanical precision

The high precision, high stiffness cross roller bearings used for the main roller bearings in the CSF Mini Series 2UP Type deliver excellent mechanical accuracy on the output section. Mechanical accuracy of the output section is shown below.

Fig.282 -1

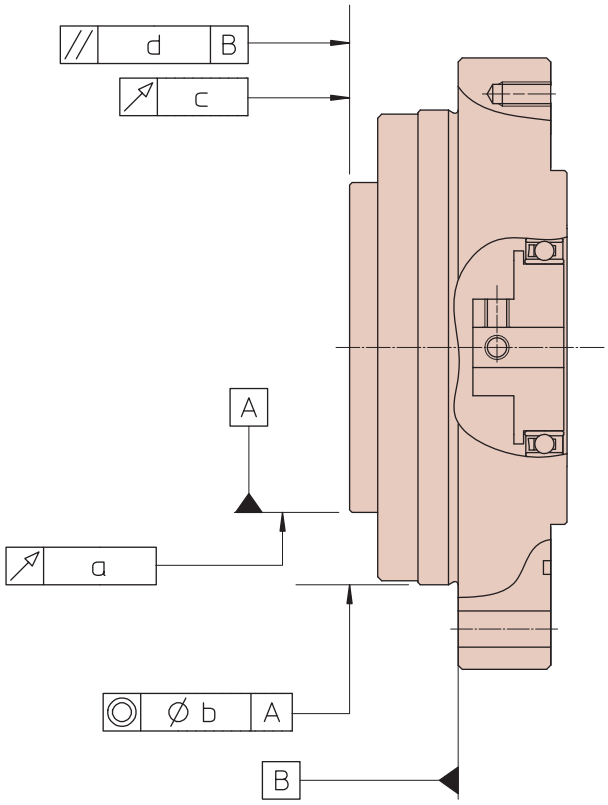

Table282 -1
Unit: mm

Symbol	Accuracy items	Model		
		8	11	14
a	Deflection of output shaft	0.010		
b	Concentricity of the mounting spigot	0.040		
c	Output flange surface runout	0.010		
d	Parallelism of the mounting face and the output flange face	0.040		

* All values are T.I.R. (Total Indicator Reading).

Efficiency characteristics

Efficiency varies according to the following factors.

- Reduction ratio
- Input rotational speed
- Load torque
- Temperature
- Lubrication condition (type and amount)

Measuring condition

Table283 -1

Load torque	Rated torque shown in rated table		
Lubrication condition	Grease lubricant	Name	Harmonic grease® SK-2
		Application qty.	Appropriate application qty.

■Efficiency correction coefficient

When load torque is lower than rated torque, efficiency drops. Determine the correction coefficient Ke in Graph 283-1, and then refer to the example calculation below to determine efficiency.

Example: Using CSF-8-100-2UP as an example, determine efficiency η (%) under the following conditions.
Input rotational speed: 1000 r/min
Lubrication method: Grease lubricant
Load torque: 2.0 N·m
Lubrication temperature: 20°C

Rated torque for Model No. 8 at a reduction ratio of 100 is 2.4 N·m.
Therefore, torque ratio α is 0.83. (α = 2.0/2.4 ≒ 0.83)
For the efficiency correction coefficient Ke, Graph 283-1 gives Ke = 0.99.
For efficiency η at a load torque of 2.0 N·m,
η=Ke, η_R = 0.99 × 77% = 76%.

Note: When the load torque is greater than the rated torque, the efficiency correction coefficient Ke = 1.

Efficiency correction coefficient

Graph283 -1

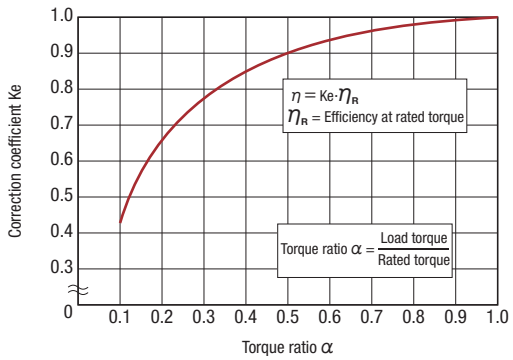

■Efficiency at rated torque

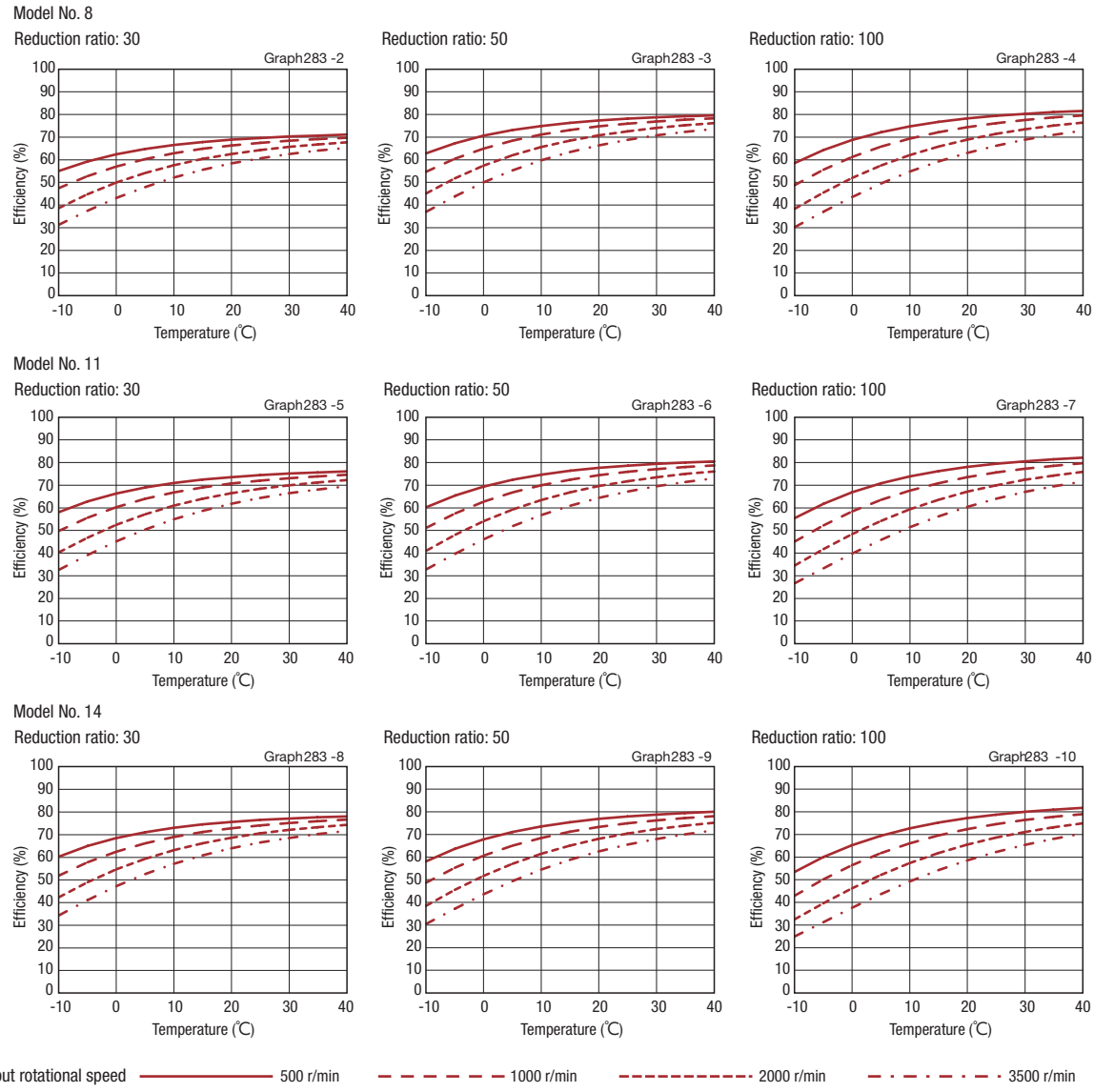

On no-load running torque

No-load running torque means the torque on the input side (high-speed shaft side) required to put HarmonicDrive® under a no-load condition.
* For detailed values, contact our sales office.

Measuring condition

Table284 -1

Reduction Ratio: 100			
Lubrication condition	Grease lubricant	Name	Harmonic grease® SK-2
Torque value is after running 2 hours or more at 2000 r/min input			

■Correction quantity by reduction

HarmonicDrive® no-load running torque differs depending on the reduction ratio. Graphs 284-1 to 284-4 show values for a reduction ratio of 100. Determine for other ratios using the correction quantities shown in Table 284-2.

Correction quantity for the no-load running torque

Table284 -2
Unit: cN·m

Model \ Reduction ratio	30	50
8	0.49	0.22
11	0.81	0.36
14	1.25	0.55

■No-load running torque at reduction ratio of 100

Input rotational speed: 500 r/min

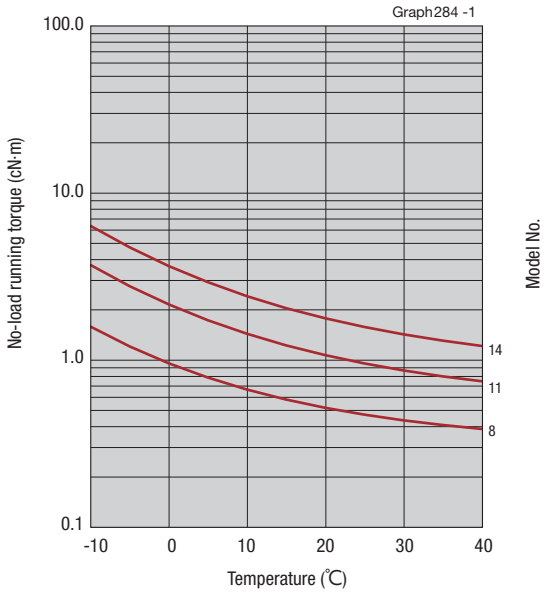

Input rotational speed: 1000 r/min

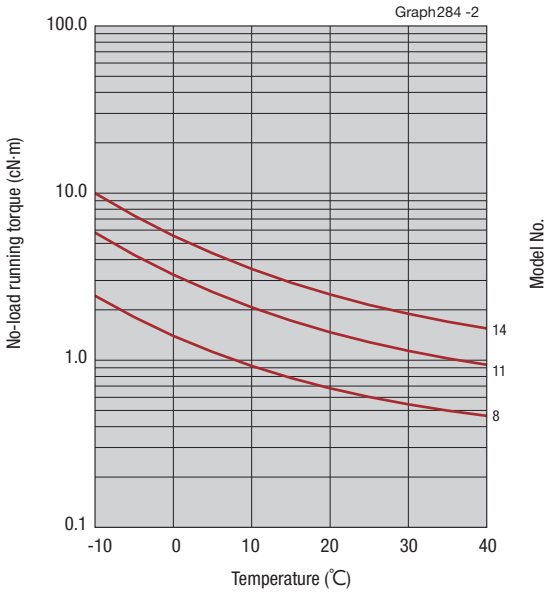

Input rotational speed: 2000 r/min

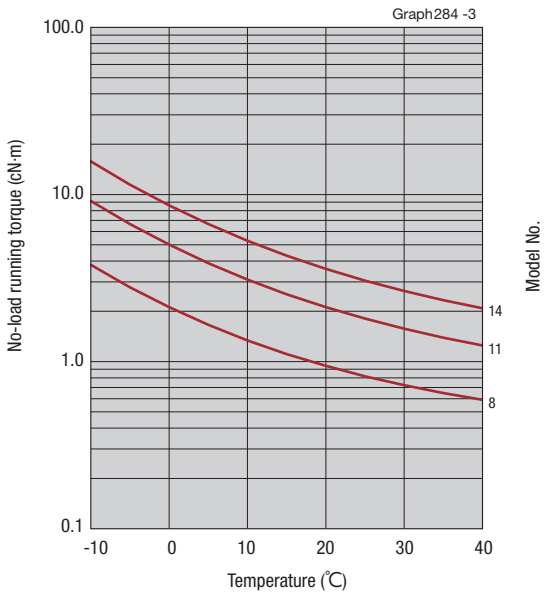

Input rotational speed: 3500 r/min

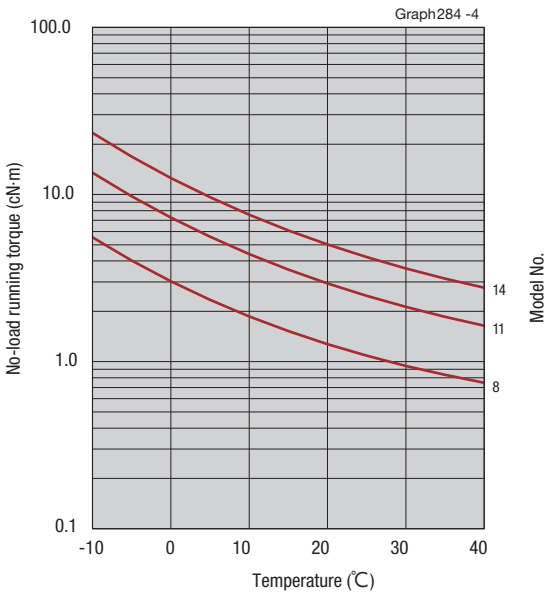

Note: These graph values are average of $\overline{X}$.

Example of installation

The following illustration shows the unit installed to the motor.

Fig.285 -1

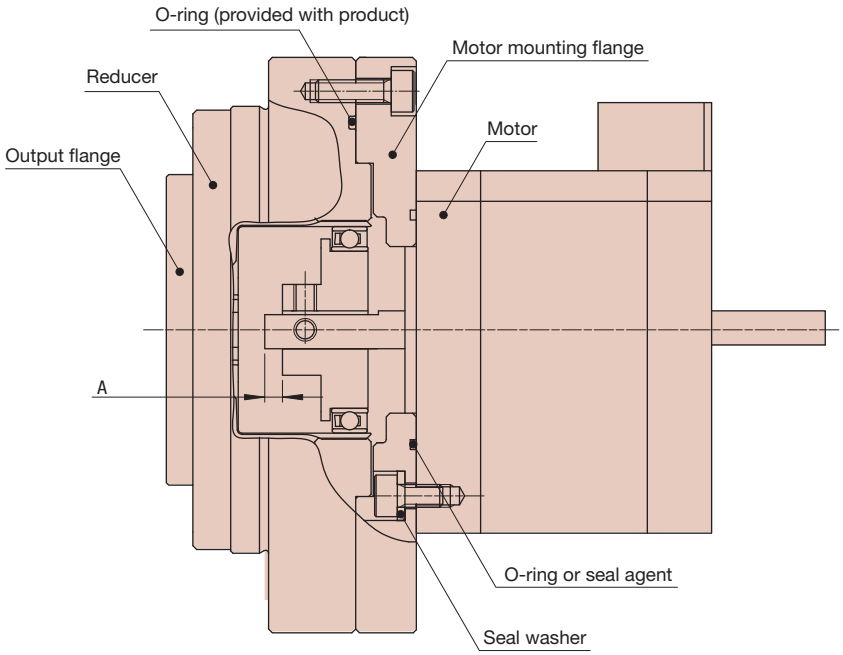

■Sealing mechanism

When installing to the motor, the following sealing mechanism is required to prevent grease leakage and maintain the high durability of the HarmonicDrive®.

Table285 -1

Area requiring sealing		Recommended sealing method
Motor mounting flange	HarmonicDrive® side (reducer side)	Use O-ring (provided with our product)
	Motor side	O-ring, seal agent, seal washer, etc. (Installed flat without distortion, avoid entanglement of the O-ring)
Motor output shaft		Select a motor output shaft with attached oil seal. If there is no oil seal, install an oil seal to the motor mounting flange.
Screw hole area		Use thread locker with sealing properties (Loctite 242 recommended) or seal tape.

* The output flange has a seal structure, so the application of a seal agent is not necessary.

■Cautions when installing the motor

Ensure that the protruding length A shown in Drawing 285-1 is less than the values shown in the table below.

Table285 -2
Unit: mm

Model / Dimension	8	11	14
A	2.5	4.5	6

Installation precision

In the installation design, maintain the recommended precision shown below in order to fully realize the superior performance possessed by the CSF Mini Series 2UP Type.

Fig.286 -1

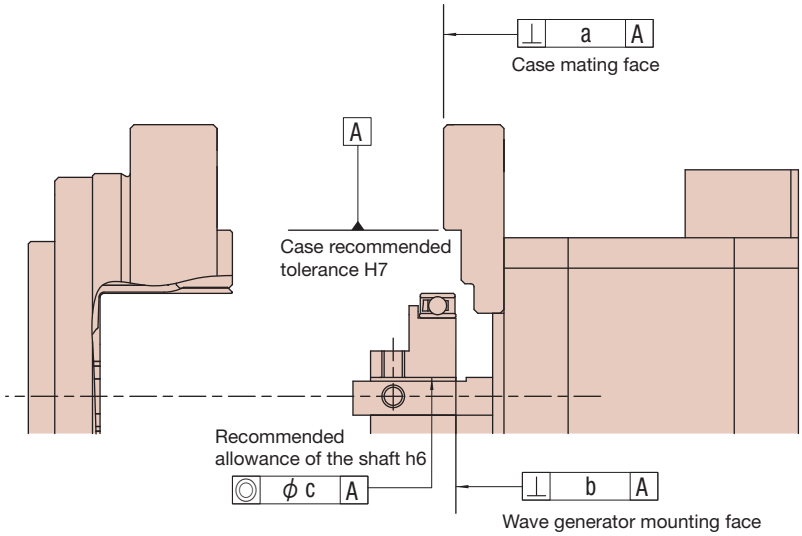

Table286 -1
Unit: mm

Subject Dimension \ Model		8	11	14
a	Squareness of the case mating face	0.010	0.011	0.011
b	Wave generator mounting face	0.006	0.007	0.008
c	Concentricity of the input shaft	0.006	0.007	0.016

Installation and transmission torque

Fig.286 -2

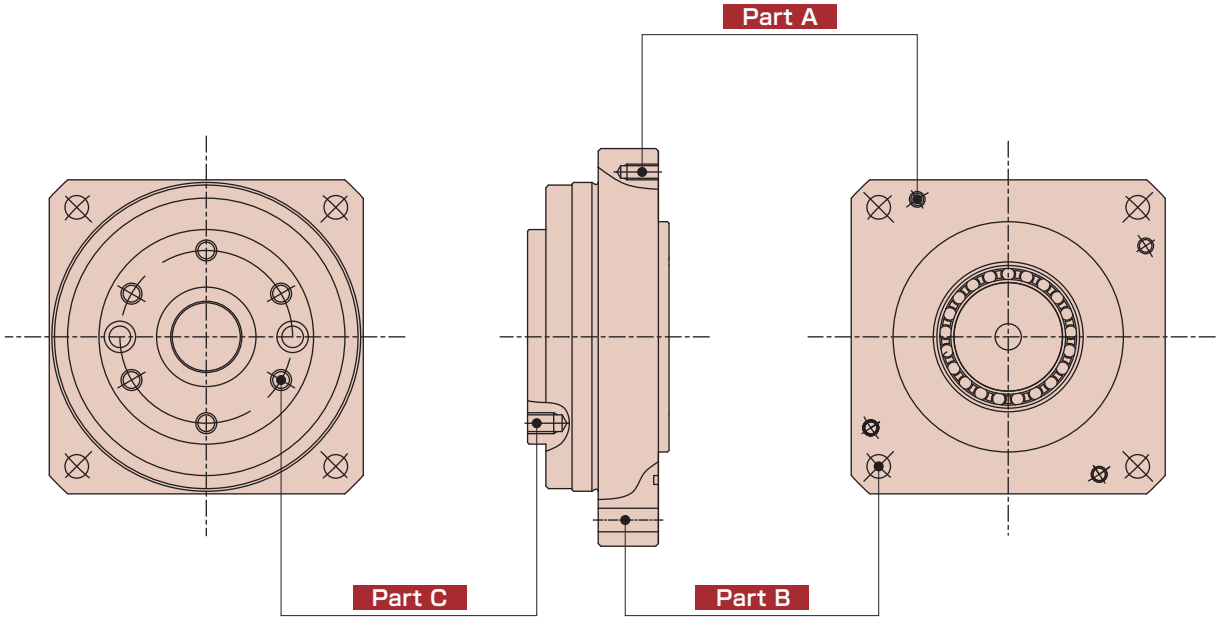

■Flange (case) installation A

When installing the CSF Mini Series 2UP Type to a motor, etc., check the flatness of the mounting face and for burrs on the tap before connecting the reducer to the motor mounting flange (case), etc. with bolts.

Table287 -1

Item \ Model		8	11	14
Number of bolts		4	4	4
Bolt size		M3	M3	M4
Installation P.C.D.	mm	52	63	70.71
Tightening torque*	N·m	0.85	0.85	2.0
	kgf·m	0.09	0.09	0.20
Screw area minimum fitting clearance length	mm	3.6	3.6	4.8
Transmission torque*	N·m	18	22	44
	kgf·m	1.9	2.3	4.5

*Recommended bolt name: Hexagonal bolt per JIS B 1176 Strength category: JIS B 1051 12.9 or higher

■Installation on the equipment B

When installing the CSF Mini Series 2UP Type to equipment, check the flatness of the mounting face and for burrs on the tap before connecting the reducer and motor mounting flange (case) with bolts.

Table287 -2

Item \ Model		8	11	14
Number of bolts		4	4	4
Bolt size		M3	M4	M5
Installation P.C.D.	mm	58	70	88
Tightening torque*	N·m	1.2	2.7	5.4
	kgf·m	0.12	0.28	0.55
Screw area minimum fitting clearance length	mm	3.6	4.8	6.0
Transmission torque*	N·m	29.0	59.1	119
	kgf·m	3.0	6.0	1.2

*When fastening members are steel
*Recommended bolt name: Hexagonal bolt per JIS B 1176 Strength category: JIS B 1051 12.9 or higher
* Use a washer so that the bolt seating surface does not directly touch the aluminum.

■Installation of the load on the output part C

When installing the output section of the CSF Mini Series 2UP Type to the load, take into account the main roller bearing specifications.

Table287 -3

Item \ Model		8	11	14
Number of bolts		6	6	6
Bolt size		M3	M4	M5
Installation P.C.D.	mm	25.5	33.0	44.0
Tightening torque*	N·m	2.0	4.5	9.0
	kgf·m	0.20	0.46	0.92
Screw area minimum fitting clearance length	mm	3.6	4.8	6.0
Transmission torque*	N·m	31.9	69.6	184
	kgf·m	3.3	7.1	15

The output flange has a seal structure, so seal agent application is not required.
*Recommended bolt name: Hexagonal bolt per JIS B 1176 Strength category: JIS B 1051 12.9 or higher

Motor mounting flange

Our company provides motor mounting flanges.
We need to know the dimensions of the motor when designing the flange.
When ordering, provide the dimensions A to J shown in Drawing 288-1 (A to N if key groove present).

Fig.288 -1

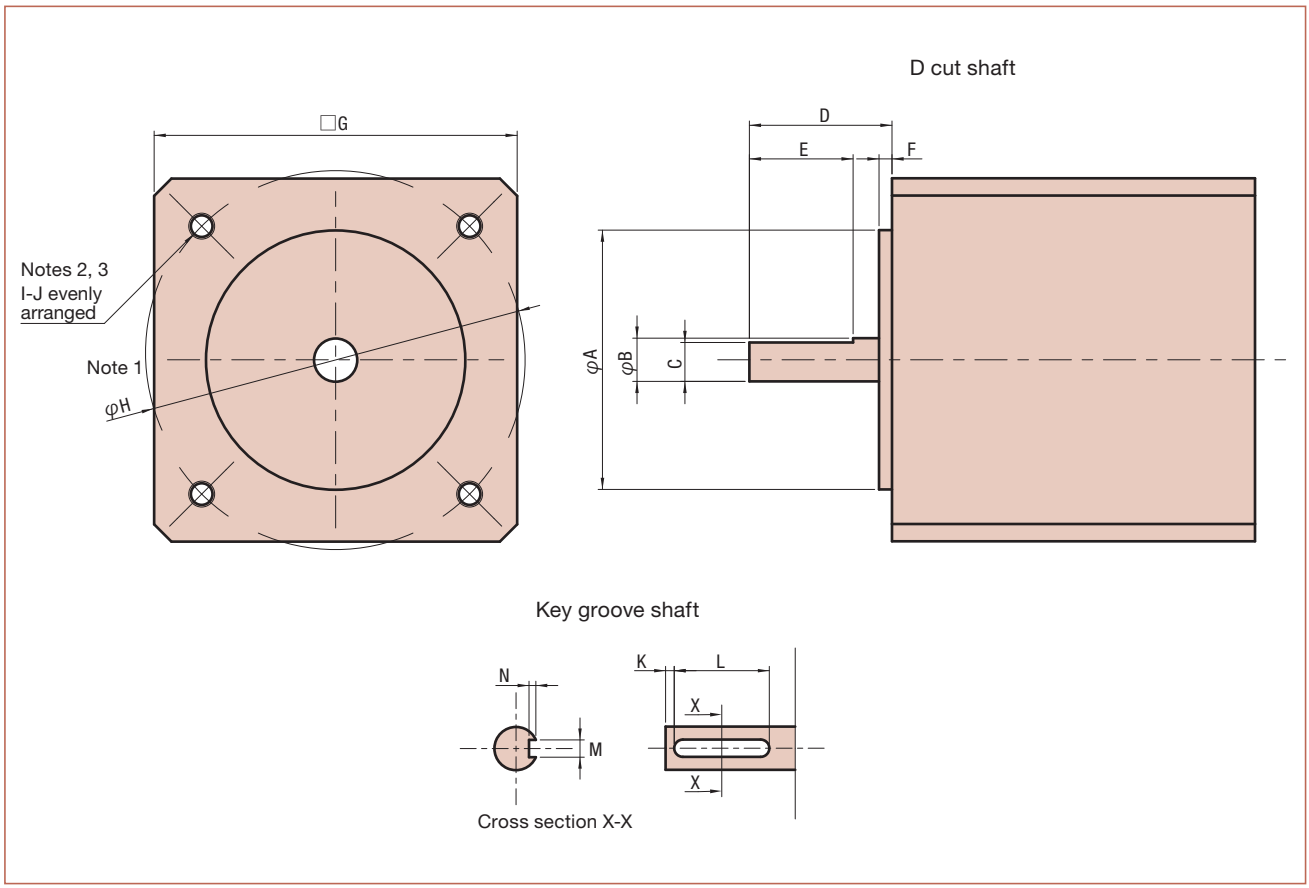

(Note) 1. H: Pitch diameter of installation holes or pitch angle
2. I: Total number of installation holes
3. J: Tapped hole nominal diameter and hole depth, or through-hole diameter
4. If using an O-ring between the motor and motor mounting flange, provide the O-ring dimensions.

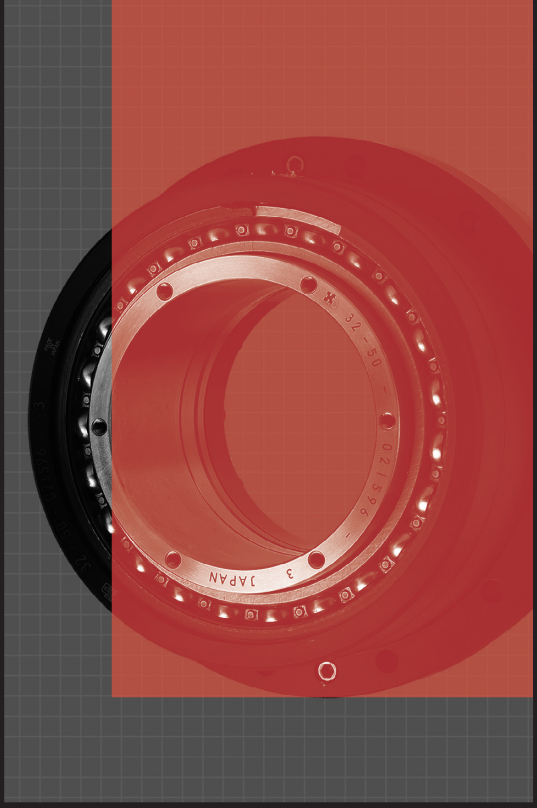

FBS-2UH Series Small Outer Diameter/Large Hollow Shaft Type

Unit Type FBS-2UH

Features

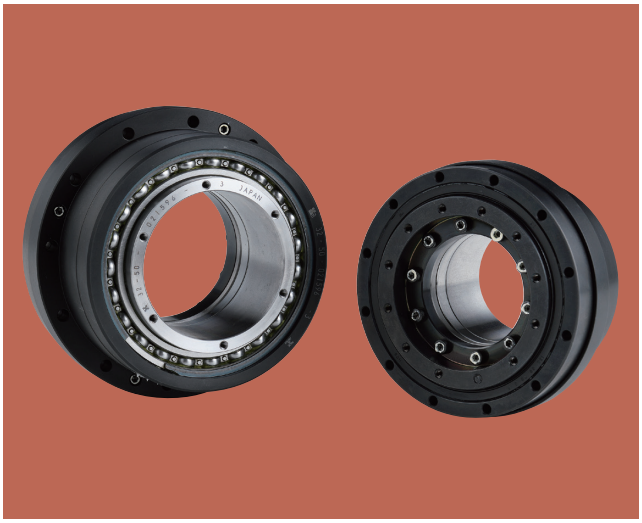

■FBS-2UH Series Small Outer Diameter/Large Hollow Shaft Type

This HarmonicDrive® features large hollow shaft and smaller outer diameter as a new design.
Fully seeking the hollow shaft, one of the HarmonicDrive® features, we've developed the new-design unit with the fully-reduced outer diameter.
The newly-designed HarmonicDrive® FBS type has been adopted to realize the characteristic shape.
This series provides the robot edge shaft or mechanical devices that are facing the challenge of cable layout with more compact- and smaller-footprint-design.

Features of FBS-2UH series

- ■Ratio of the hollow-shaft diameter to the outer diameter has increased 20% compared with the previous products.
- ■The maximum hollow-shaft diameter and minimum outer diameter have been pursued for each size.
- ■2 types of the size and 3 types of the speed reduction ratio have been added to the product lineup.
- ■The newly designed HarmonicDrive® FBS type has been adopted.

Fig.290 -1

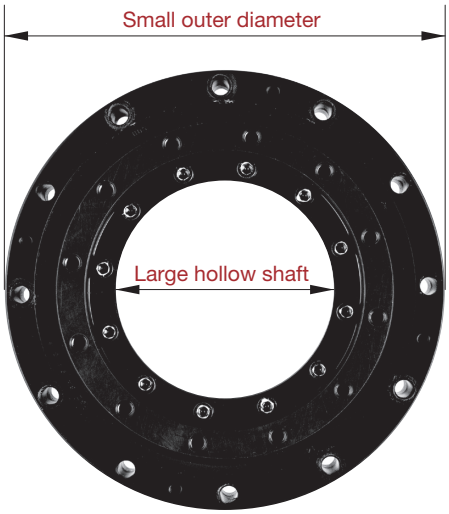

Ratio of the hollow-shaft diameter to the outer diameter

Model	Hollow-shaft diameter	Outer diameter	Ratio
25	41.0mm	93mm	44%
32	55.1mm	113mm	49%

Model and Symbol

FBS - 25 - 30 - 2UH - SP

Table290 -1

Model name	Model	Reduction ratio			Model	Special Specification
FBS Series	25	30	50	100	Unit Type	No description = Standard product SP = Special specification in form, performance
	32	30	50	100		

Technical Data

Rating table

Table291 -1

Model	Reduction ratio	Rated torque at input 2000r/min		Peak torque at start/stop		Permissible max. value of ave. load torque		Instantaneous permissible max. torque		Permissible max. input rotational speed	Permissible ave. input rotational speed	Inertia moment (1 / 4GD²)
		N·m	kgf·m	N·m	kgf·m	N·m	kgf·m	N·m	kgf·m	r/min	r/min	kg·cm²
25	30	15	1.5	25	2.5	24	2.4	50	5.1	3600	2500	1.0
	50	22	2.2	47	4.8	35	3.6	93	9.5			
	100	37	3.8	70	7.1	59	6.0	100	10.2			
32	30	30	3.1	48	4.9	48	4.9	96	9.8		2300	3.3
	50	43	4.4	92	9.4	67	6.8	151	15.4			
	100	56	5.7	106	10.8	89	9.1	151	15.4			

■External dimensions

Fig.291 -1

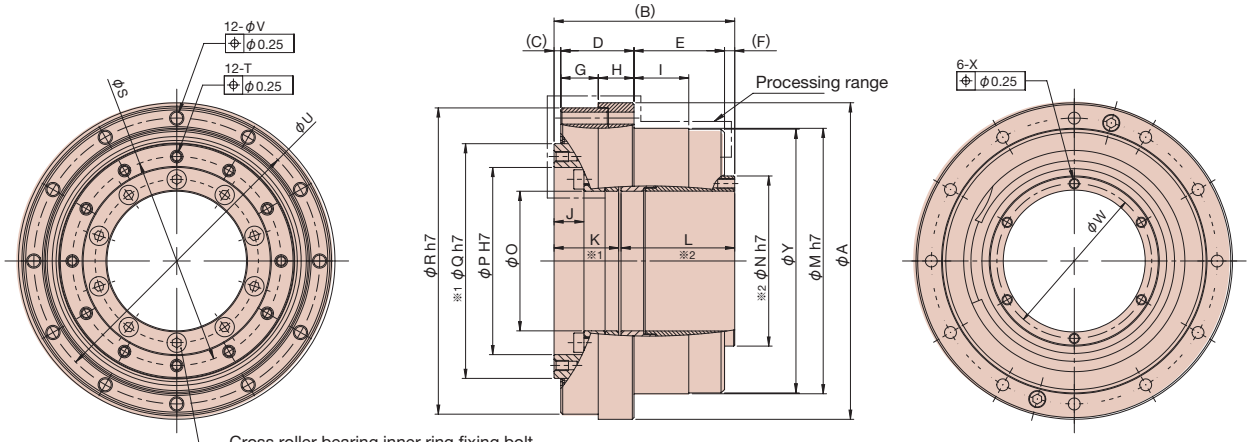

Cross roller bearing inner ring fixing bolt
Model 25
Speed ratio30,50: 10-M3x10 evenly arranged
Speed ratio100: 20evenly arranged15-M3x10
Model32
Speed ratio30,50: 12-M3x14 evenly arranged
Speed ratio100: 24evenly arranged18-M3x14

※1:Outer diameter of output rotor part (low-speed rotation side)
※2:Outer diameter of input rotor part (high-speed rotation side)

■Measurement table

Table291 -2
Unit: mm

Model / Symbol	ϕA	B	C	D	E	F	G	H	I	J	K	L	ϕM h7	ϕN h7	ϕO	ϕP H7	ϕQ h7	ϕR h7	ϕS	T	ϕU	ϕV	ϕW	X	ϕY
25	93	53.1	2	21.5	26.6	3	11.0	10.5	16.1	8.8	19.0	33.4	78	50	41.0	55	69	90	61.4	M3×4.5	84	3.5	45.5	M3×5	77.5
32	113	62.5	2	25.2	32.3	3	13.7	11.5	20.0	7.5	21.7	39.97	96	65	55.1	69	84	110	77.0	M4×6.0	102	4.5	60.0	M3×6	95.5

■ Input part (wave generator axial clearance)

The support structure of the input part has internal clearance, and the input part moves depending on the external force or operating conditions. The following table shows the axial clearance.
If positioning in the axial direction is required, the design that can fix the part must be secured.

Table291 -3
Unit: mm

Model	Dimension X	Axial clearance	
		a	b
25	3	0.1 to 0.7	0.0 to 0.6
32	3	0.2 to 0.8	0.1 to 0.7

Fig.291 -2

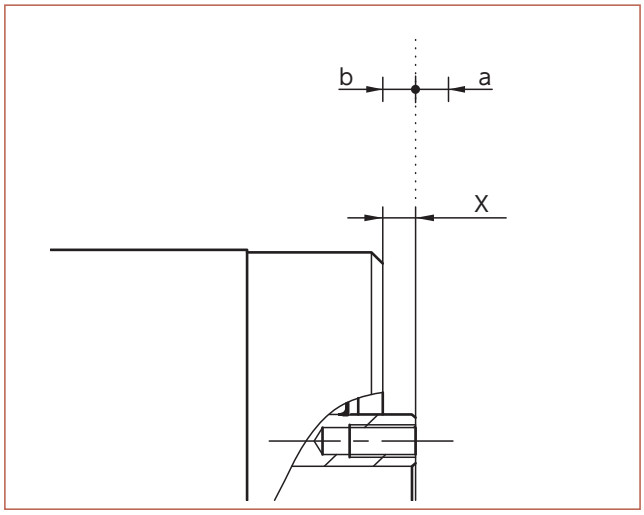

Angle transmission accuracy

See "Engineering data" for a description of terms.

Table292 -1

Reduction ratio \ Model		25	32
30	$\times10^{-4}$rad	8.7	8.7
	arc-min	3	3
50	$\times10^{-4}$rad	5.8	5.8
	arc-min	2	2
100	$\times10^{-4}$rad	5.8	5.8
	arc-min	2	2

Hysteresis loss

See "Engineering data" for a description of terms.

Table292 -2

Reduction ratio \ Model		25	32
30	$\times10^{-4}$rad	8.7	8.7
	arc-min	3	3
50	$\times10^{-4}$rad	5.8	5.8
	arc-min	2	2
100	$\times10^{-4}$rad	2.9	2.9
	arc-min	1	1

Rigidity (spring constant)

See "Engineering data" for a description of terms.

Table292 -3

Symbol \ Model			25	32
T_1		N·m	7.4	16
		kgf·m	0.75	1.6
T_2		N·m	26	55
		kgf·m	2.7	5.6
Reduction ratio 30	K_1	$\times10^4$N·m/rad	1.3	2.1
		kgf·m/arc-min	0.4	0.64
	K_2	$\times10^4$N·m/rad	1.3	2.4
		kgf·m/arc-min	0.4	0.71
	K_3	$\times10^4$N·m/rad	1.6	2.9
		kgf·m/arc-min	0.48	0.87
	θ_1	$\times10^{-4}$rad	5.4	7.4
		arc-min	1.9	2.5
	θ_2	$\times10^{-4}$rad	19	24
		arc-min	6.6	8.2
Reduction ratio 50	K_1	$\times10^4$N·m/rad	1.9	3.5
		kgf·m/arc-min	0.56	1.0
	K_2	$\times10^4$N·m/rad	2.0	3.7
		kgf·m/arc-min	0.6	1.1
	K_3	$\times10^4$N·m/rad	2.3	4.3
		kgf·m/arc-min	0.69	1.3
	θ_1	$\times10^{-4}$rad	3.9	4.5
		arc-min	1.4	1.6
	θ_2	$\times10^{-4}$rad	13	15
		arc-min	4.5	5.2
Reduction ratio 100	K_1	$\times10^4$N·m/rad	3.2	6.5
		kgf·m/arc-min	0.94	1.9
	K_2	$\times10^4$N·m/rad	3.2	6.5
		kgf·m/arc-min	0.94	1.9
	K_3	$\times10^4$N·m/rad	3.2	6.6
		kgf·m/arc-min	0.94	2.0
	θ_1	$\times10^{-4}$rad	2.0	2.2
		arc-min	0.7	0.8
	θ_2	$\times10^{-4}$rad	7.8	8.3
		arc-min	2.7	2.9

* The values in this table are reference values. The lower-limit value is approximately 70% of the displayed value.

Starting torque

See “Engineering data” for a description of terms. As the values in the table below vary depending on the use conditions, use them as reference values.

Table293 -1
Unit: cN·m

Reduction ratio \ Model	25	32
30	25	54
50	15	31
100	11	20

Overdrive starting torque

See “Engineering data” for a description of terms. As the values in the table below vary depending on the use conditions, use them as reference values.

Table293 -2
Unit: N·m

Reduction ratio \ Model	25	32
30	11	23
50	9	18
100	13	22

Ratcheting torque

See “Engineering data” for a description of terms.

Table293 -3
Unit: N·m

Reduction ratio \ Model	25	32
30	170	270
50	200	410
100	270	510

Acceleration breakdown torque

See “Engineering data” for a description of terms.

If the torque that exceeds the value listed in the following table is applied to the output part while the input part is fixed, the tightening part of the unit is damaged, and the torque cannot be transmitted.

Table293 -4
Unit: N·m

Reduction ratio \ Model	25	32
30	370	730
50		
100		

On no-load running torque

No-load running torque means the torque on the input side (high-speed shaft side) required to put HarmonicDrive® under a no-load condition.

* For detailed values, contact our sales office.

Measuring condition

Table294 -1

Lubrication condition	Reducer	Main roller bearing
	Harmonic grease® SK-1A	Harmonic grease® 4B No.2
Torque value is after running 2 hours or more at 2000 r/min input		

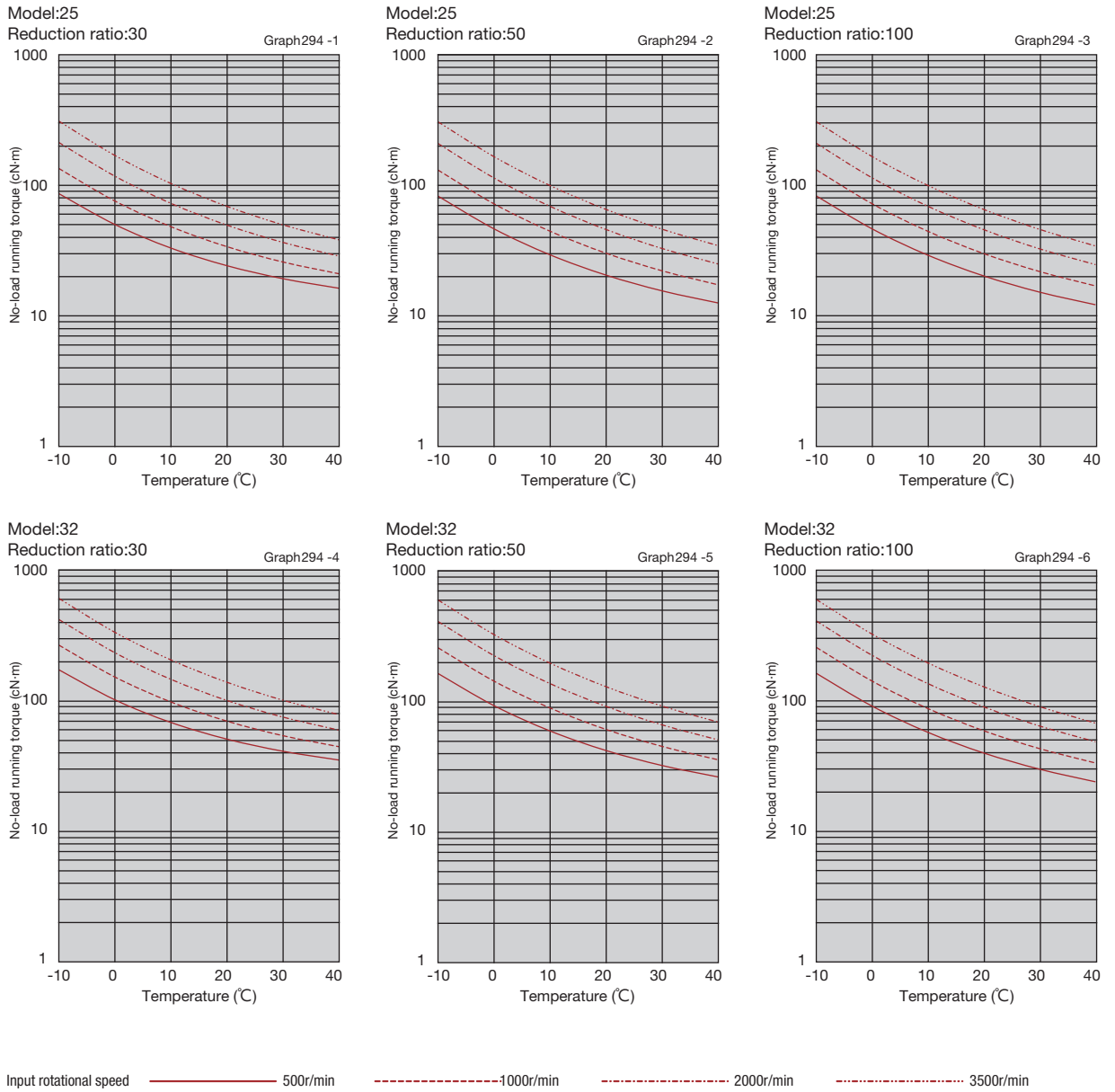

Note: These graph values are average of $\overline{X}$.

Efficiency characteristics

The efficiency is lowered depending on the load torque. Obtain efficiency compensation coefficient Ke from the graph, and check the value through the following formula.

*1 The efficiency compensation coefficient is the average value when the grease temperature is approximately 30°C.

*2 When the load torque is greater than the rated torque, the efficiency correction coefficient Ke = 1.

Measuring condition

Table295 -1

Lubrication condition	Reducer	Main roller bearing
	Harmonic Grease® SK-1A	Harmonic Grease® 4B No.2
The efficiency value is measured after two or more hours run-in at 2000 r/min input speed.		

Efficiency correction coefficient: Ke
Efficiency at rated torque: ηR
Efficiency depending on the load torque: η

$$\eta = Ke \times \eta R$$

$$\text{Torque ratio } \alpha = \frac{\text{Load torque}}{\text{Rated torque}}$$

Efficiency correction coefficient

Graph295 -1

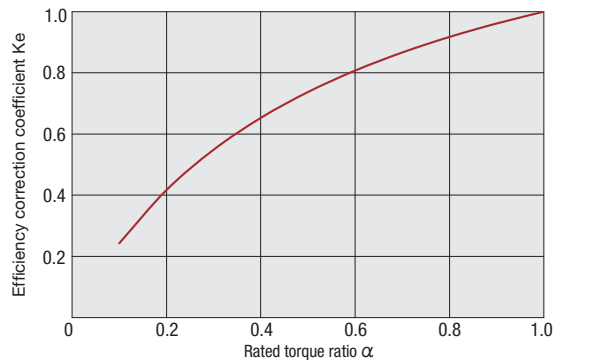

■Efficiency at rated torque

Model:25
Reduction ratio:30

Graph295 -2

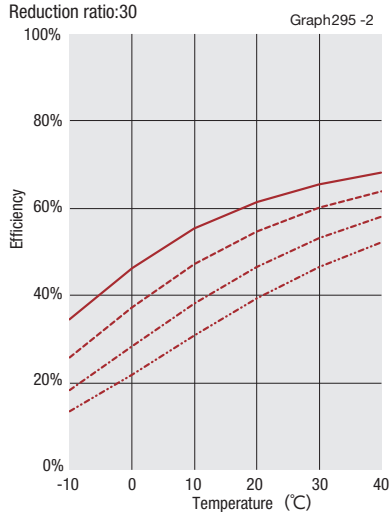

Model:25
Reduction ratio:50

Graph295 -3

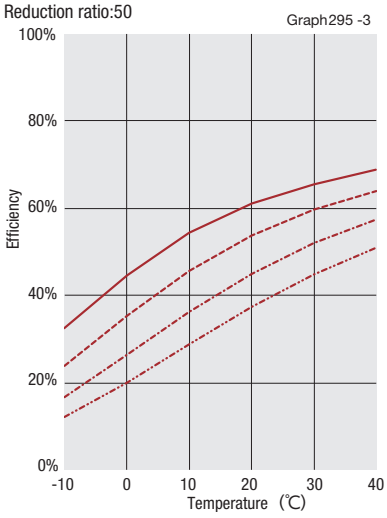

Model:25
Reduction ratio:100

Graph295 -4

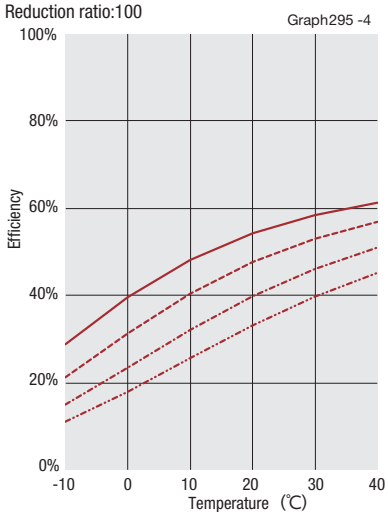

Model:32
Reduction ratio:30

Graph295 -5

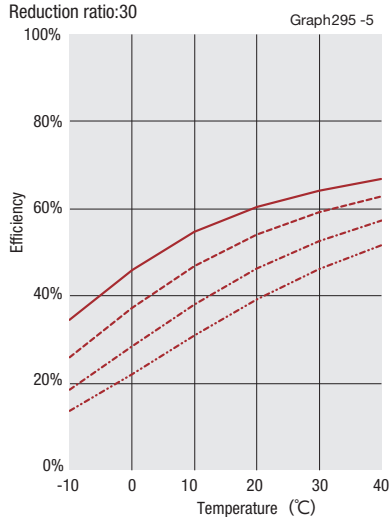

Model:32
Reduction ratio:50

Graph295 -6

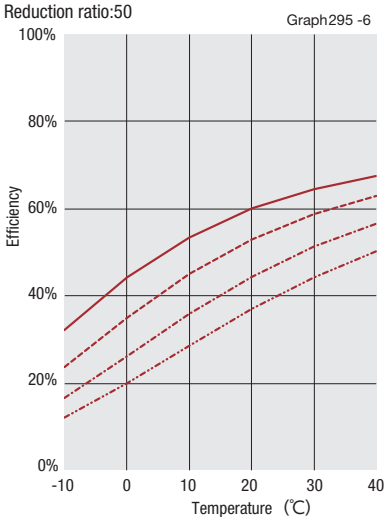

Model:32
Reduction ratio:100

Graph295 -7

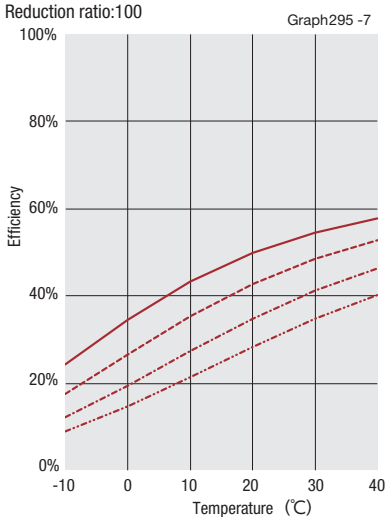

Input rotational speed ——— 500r/min - - - - 1000r/min -·-·- 2000r/min -··-··- 3500r/min

Note: These graph values are average of X.

Specification of the main roller bearing

A precision cross roller bearing is built in the unit type to directly support the external load (output flange).
Check the maximum load moment load, life of the bearing and static safety coefficient to fully bring out the performance of the unit type.

■Checking procedure

(1) Checking the maximum load moment load (M*max*)

Obtain the maximum load moment load (M*max*). → Maximum load moment load (M*max*) ≦ permissible moment (Mc)

(2) Checking the life

Obtain the average radial load (Fr*av*) and the average axial load (Fa*av*). → Obtain the radial load coefficient (x) and the axial load coefficient (y). → Calculate the life and check it.

(3) Checking the static safety coefficient

Obtain the static equivalent radial load coefficient (Po). → Check the static safety coefficient. (fs)

■Main roller bearing specifications

Table296 -1

Model	Pitch circle dia. of a roller	Offset amount	Basic rated load				Permissible moment load Mc		Moment rigidity Km	
	dp	R	Basic dynamic rated load C		Basic static rated load Co					
	m	m	$\times10^2$N	kgf	$\times10^2$N	kgf	N·m	kgf·m	$\times10^4$N·m/rad	kgf·m/arc-min
25	0.070	0.0110	73	744	110	1122	93	9.5	21	6.2
32	0.086	0.0121	109	1111	179	1825	129	13.2	31	9.2

Mechanical precision

Fig.296 -1

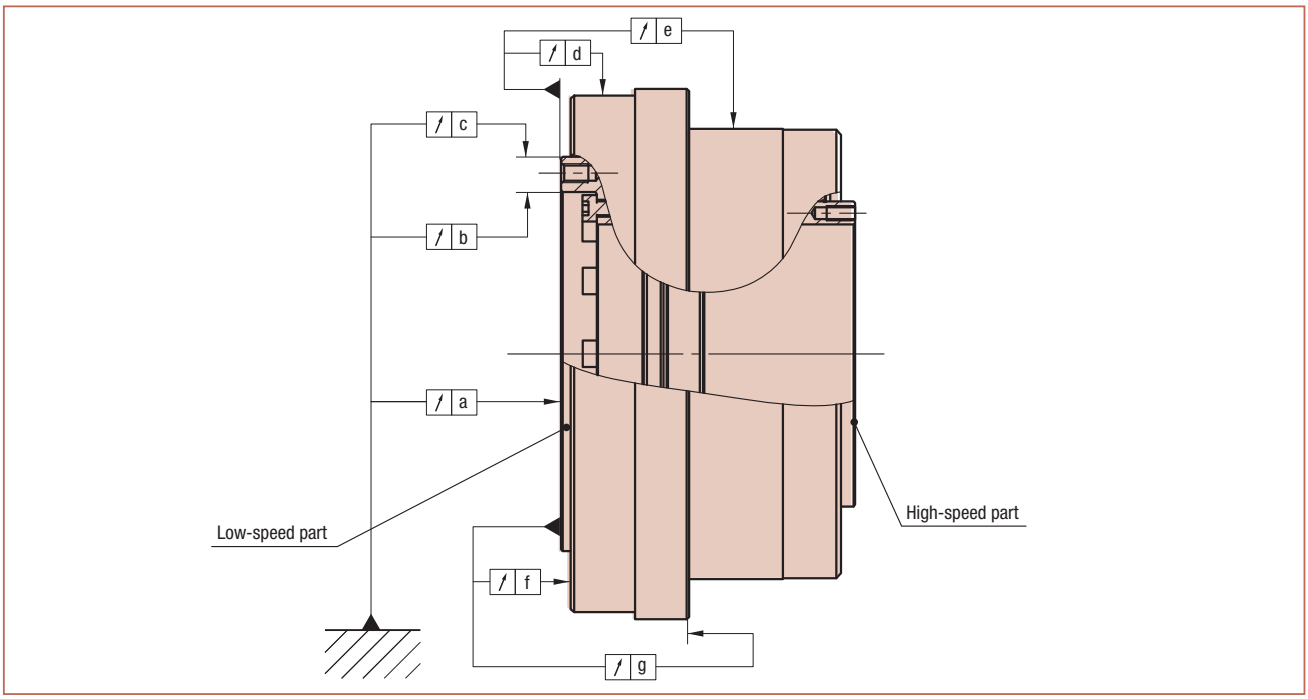

Table296 -2
Unit: mm

Symbol \ Model	25	32
a	0.015	0.015
b	0.010	0.010
c	0.010	0.010
d	0.010	0.013
e	0.070	0.073
f	0.010	0.010
g	0.018	0.024

Permissible load of the input part

Two bearings support the input part. To fully exert the performance, please check the load to be applied to the input part.
The following graph shows the maximum allowable radial load and thrust load for each size.
Note that the values on the graph are the examples when the average input speed is 2000 r/min and basic rating life L_{10} is 5,000 hours.

Fig.297 -1

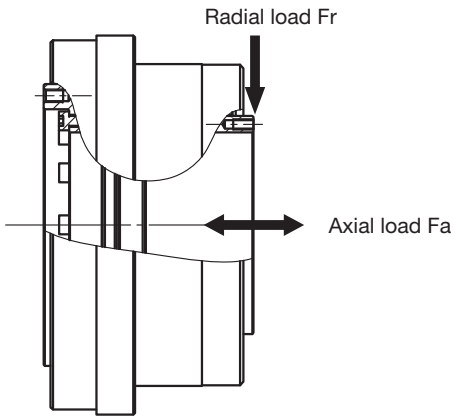

Graph297 -1

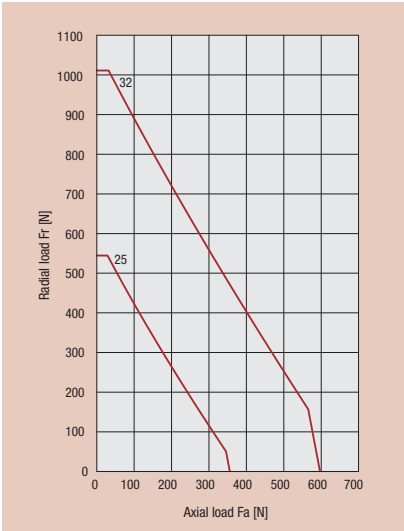

Thrust force of the input shaft

A thrust force applies to the wave generator during HarmonicDrive® operation due to elastic deformation of the flex spline.
In response to this force, this product may move in the shaft direction since the wave generator support structure has the clearance.
To reduce the movement in the input shaft direction, the design to receive the thrust force must be secured.
The thrust force (maximum value) of the wave generator can be obtained through the following formula.
The severity and direction of the thrust force varies depending on the operating conditions. The thrust force tends to increase at the extremely low speed and during the fixed continuous speed while the torque is higher, and is approximately equal to the value obtained by the formula. In both cases, the design to receive the thrust force of the wave generator must be secured.

Fig.297 -2

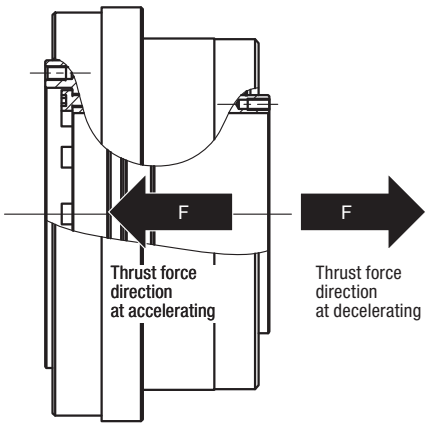

Table297 -1

Reduction ratio	Formula
30	$F=5.2\times\frac{T}{D}\times0.07\times\tan 32°$
More than 50	$F=5.2\times\frac{T}{D}\times0.07\times\tan 30°$

F = Thrust force (N)
T = Output torque (N·m)
D = (Size) x 0.00254 (m)

Installation and transmission torque

■Installation precautions

Unreasonable and abnormal installation that may deform the mounting surface may lower the performance depending on the installation design.
To take full advantage of the unit type's superior performance, pay attention to the following points.

- ●Warp and deformation on the mounting surface
- ●Blocking of foreign matter
- ●Problems caused by burrs, embossment and location around the tap area of the mounting hole
- ●Insufficient chamfering on the mounting faucet joint
- ●Insufficient roundness on the mounting faucet joint

Fig.298 -1

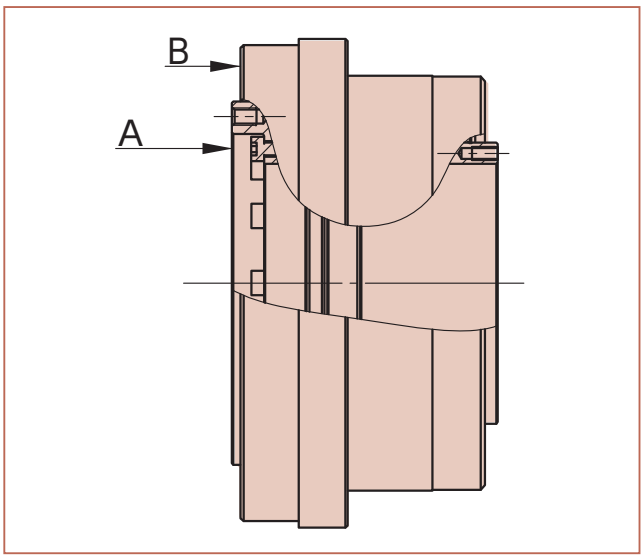

Installation and bolt transmission torque on the side of A Table298 -1

Item \ Model		25	32
Number of bolts		12	12
Bolt size		M3	M4
Installation of bolts: P.C.D.	mm	61.4	77.0
Bolt tightening torque	N·m	2.0	4.5
	kgf·m	0.20	0.46
Bolt transmission torque	N·m	154	324
	kgf·m	15.7	33.1

1. It is assumed that the material of the female screws can endure the bolt tightening torque.
2. Recommended bolt Bolt name: JIS B 1176 hexagonal bolt
   Intensity type: JIS B 1051 12.9 or more
3. Torque efficiency: K=0.2
4. Tightening efficiency: A=1.4
5. Tightening friction coefficient μ=0.15

Installation and bolt transmission torque on the side of B Table298 -2

Item \ Model		25	32
Number of bolts		12	12
Bolt size		M3	M4
Installation of bolts: P.C.D.	mm	84	102
Bolt tightening torque	N·m	2.0	4.5
	kgf·m	0.20	0.46
Bolt transmission torque	N·m	210	431
	kgf·m	21	44

1. It is assumed that the material of the female screws can endure the bolt tightening torque.
2. Recommended bolt Bolt name: JIS B 1176 hexagonal bolt
   Intensity type: JIS B 1051 12.9 or more
3. Torque efficiency: K=0.2
4. Tightening efficiency: A=1.4
5. Tightening friction coefficient μ=0.15

■Recommended runout processing of the installation spigot joint

Fig.298 -2

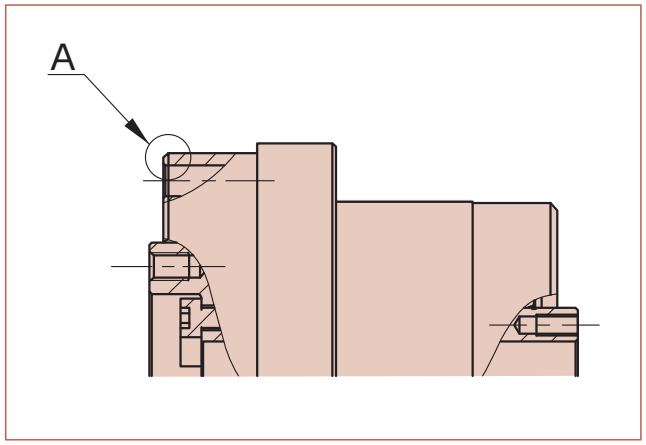

To use part A in the unit type as the installation spigot joint, perform the runout processing on the installation mated side.

Fig.298 -3

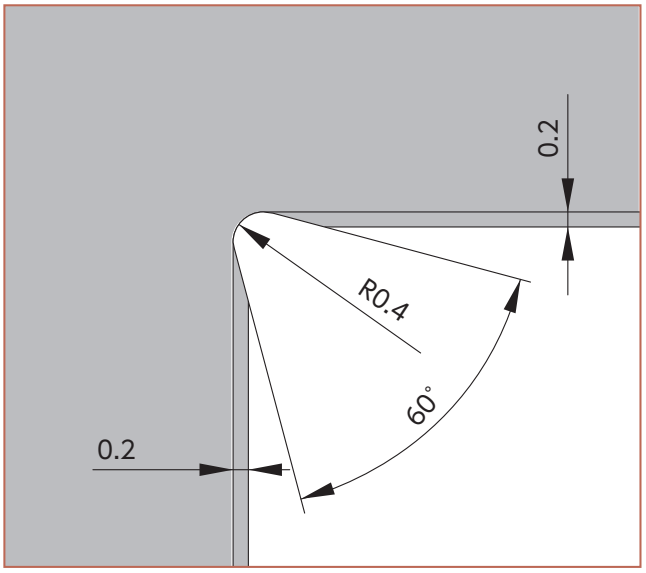

Lubrication

For lubrication of FBS-2UH, grease is used. The product is shipped with grease applied. Additional grease or lubricant is not required during assembly. For lubrication, use the following grease.

Table299 -1

Lubricated area	Reducer	Main roller bearing
Lubricant name	Harmonic Grease® SK-1A	Harmonic Grease® 4B No.2
Manufacturer	Harmonic Drive Systems Inc.	
Base oil	Refined oil	Composite hydrocarbon oil
Puffing agent	Lithium soap base	Urea
Mixing consistency (25°C)	265 to 295	290 to 320
Drop point	197°C	247°C
Exterior	Yellow	Light yellow

■When to replace grease

See “Engineering data” for details.

Application

FBS-2UH is not equipped with the sealing mechanism on the input side (high speed side) to prevent larger loss of friction caused by the larger-diameter sealing mechanism.
The following figure shows an example of sealing of the housing and on the output side (low speed side) to reduce loss of friction on the input side (high speed side) and greatly utilize the hollow-shaft shape. Note that the sealing agent or sealing mechanism such as an O-ring is required for each part to prevent grease leakage.

Fig.299 -1

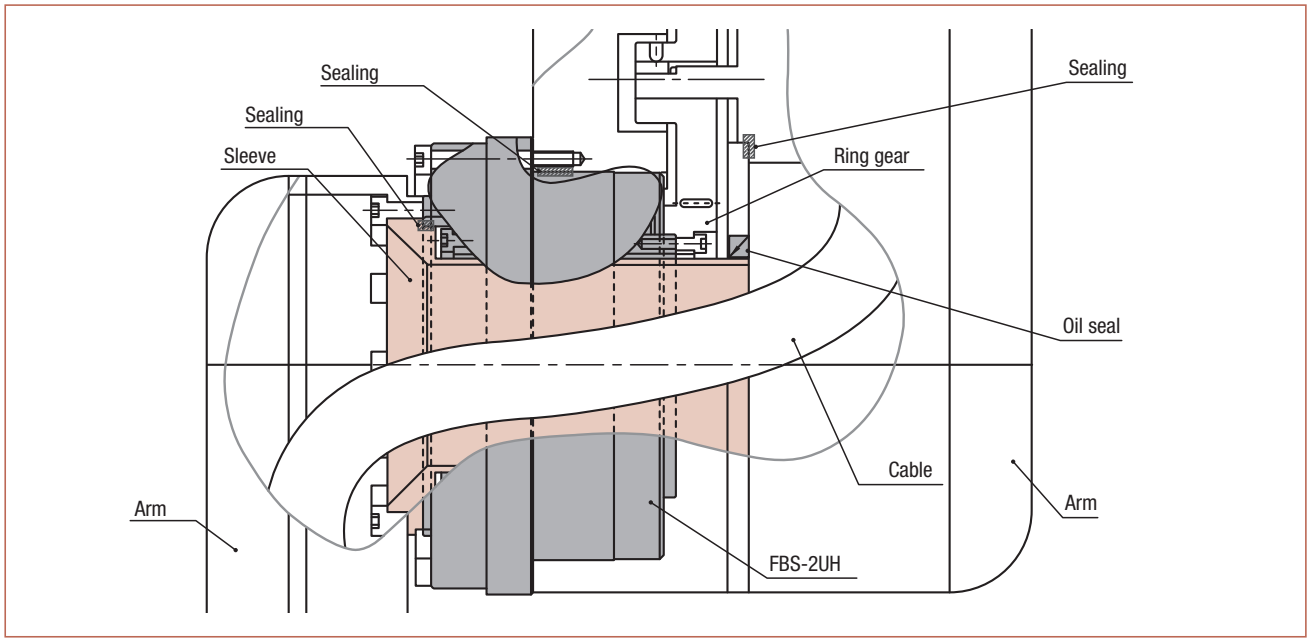

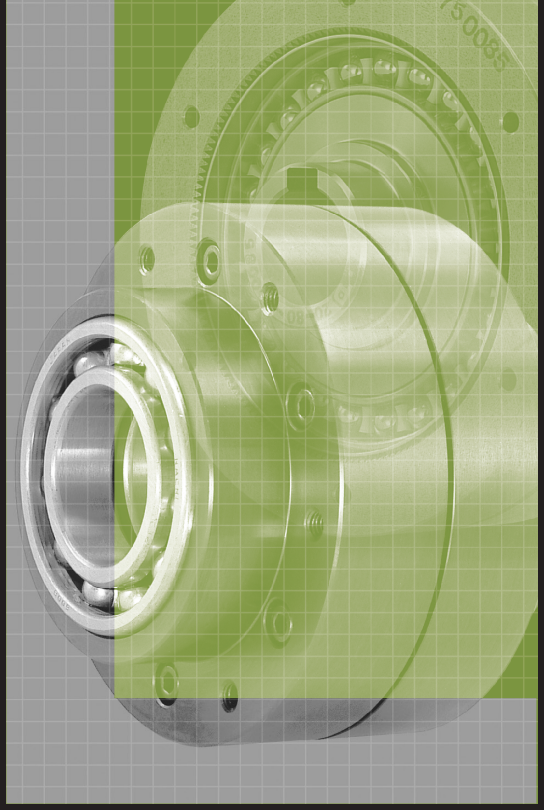

FD Series

Differential Gear FD

Features

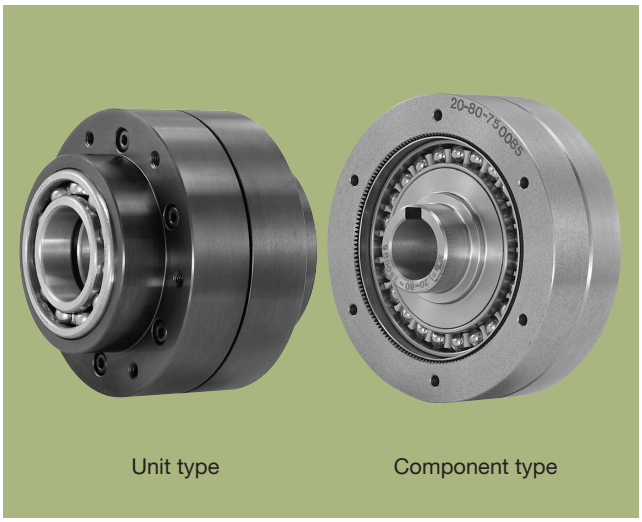

Unit type　　Component type

■Differential gear FD series

The differential gear FD series is an extremely compact differential unit that allows you to fine-tune the phase and timing during operation by applying the unique operating principle of HarmonicDrive®.
The FD series consist of four parts like the pancake-type component unit. The unit type is cased so that the gear and pulley for transmission can be directly installed in it.

Features of FD series

- ■As the differential mechanism is put together as one, it is easily installed in the equipment.
- ■It consists of only four parts and is coaxially put together.
- ■As the backlash is very small, the unit requires no assembly adjustment at all, which helps reduce the assembly cost significantly.
- ■As it has very large reduction ratio between the adjusting shaft and the output, it allows highly accurate and minute position adjustment easily and requires little torque for adjusting the shaft.

Structure of the FD series

Fig. 302-1

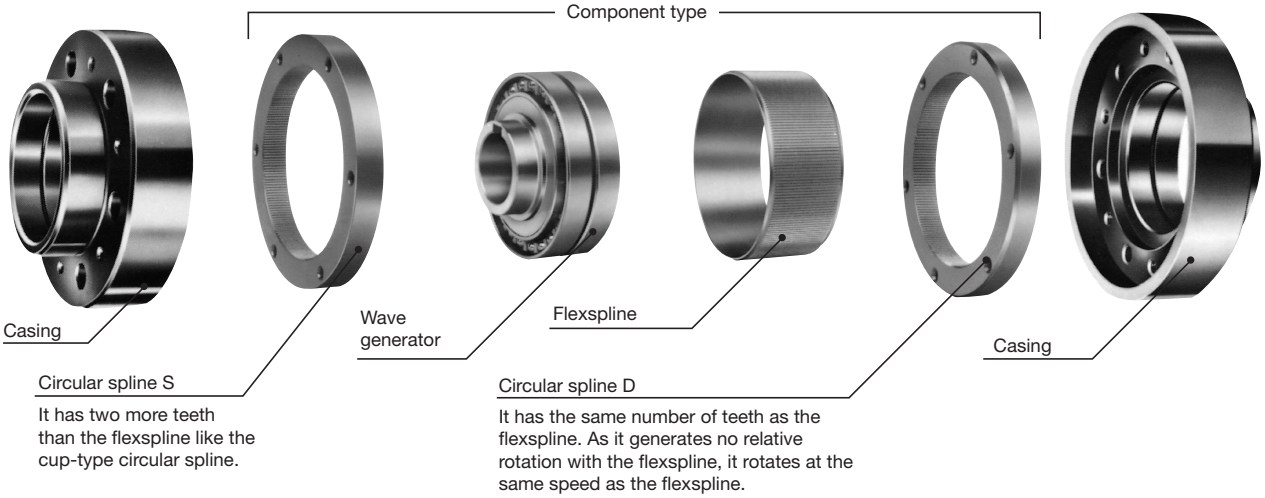

Fig. 302-2

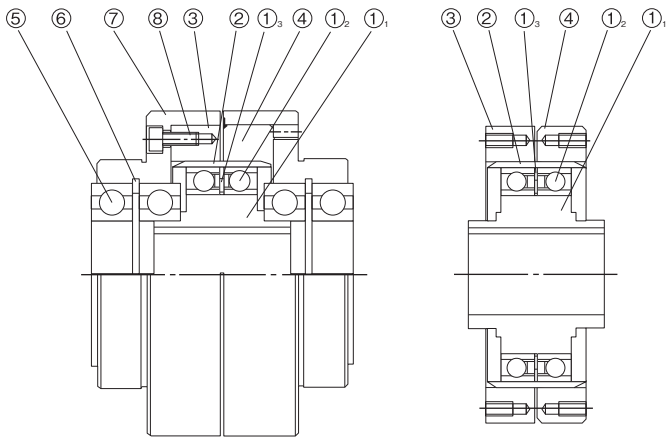

Unit type (FD-0)　　Component type (FD-2)

Part No.	Part name
①	Wave generator
①1	Wave generator plug
①2	Wave generator bearing
①3	Retainer presser
②	Flexspline
③	Circular spline S
④	Circular spline D
⑤	Ball bearing
⑥	Internal C-type stop ring
⑦	Casing
⑧	Bolt with hexagonal hole

(Note) How to tell circular spline D from circular spline S
The peripheral chamfering of circular spline D is larger than that of circular spline S.

Rotational direction and reduction ratio

The rotational direction is the same as the FB series (Page 105).
This section describes how to use the unit as a differential unit.
(R indicates the reduction ratio value in the ratings table.)

Fig. 303-1

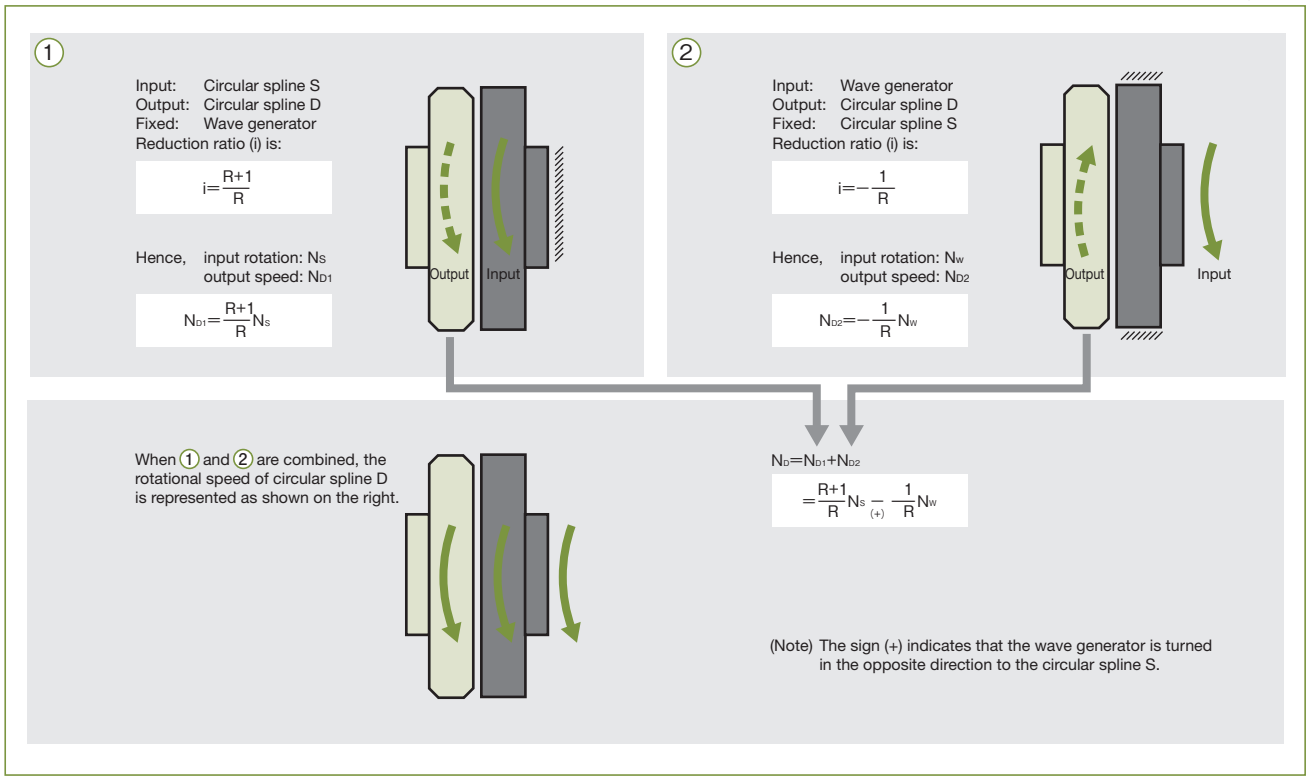

Fig. 303-2

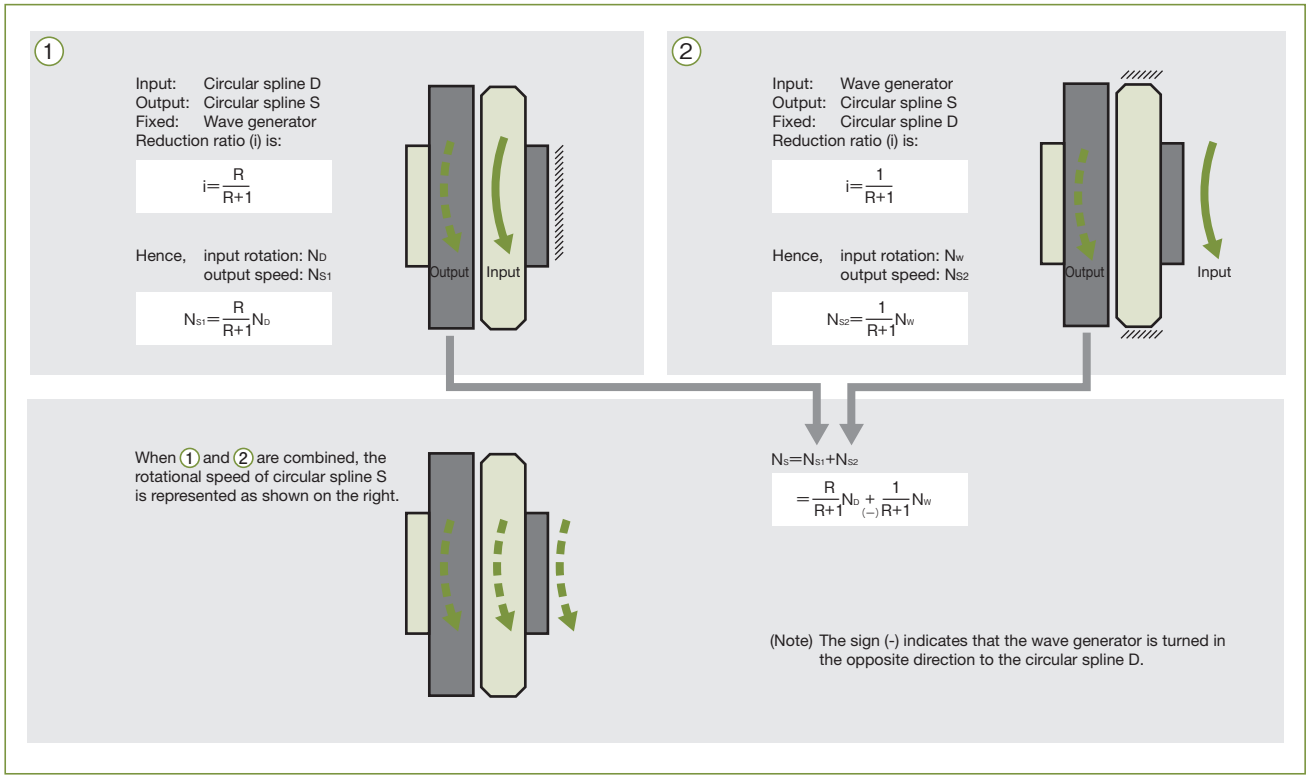

Model and Symbol

FD - 20 - 80 - 0 - G

Table 304-1

Model name	Model No.	Reduction ratio*																					Model	
FD	20	—	80	—	—	100	—	—	—	128	—	—	—	—	160	—	—	—	—	—	—	—	0= Unit type 2= Component type	Unit type G= Oil lubrication type G-GP= Grease lubrication type Component type G= New type
	25	—	80	—	—	100	—	—	120	—	—	—	—	—	160	—	200	—	—	—	—	—		
	32	78	—	—	—	100	—	—	—	—	131	—	157	—	—	—	200	—	—	—	260	—		
	40	—	80	—	—	100	—	—	—	128	—	—	—	—	160	—	200	—	—	258	—	—		
	50	—	80	—	—	100	—	—	120	—	—	—	—	—	160	—	200	—	242	—	—	—		
	65	78	—	—	—	—	104	—	—	—	—	132	—	158	—	—	—	208	—	—	260	—		
	80	—	80	—	96	—	—	—	—	128	—	—	—	—	160	194	—	—	—	258	—	320		
	100	—	80	—	—	100	—	—	120	—	—	—	—	—	160	—	200	—	242	—	—	320		

* The reduction ratio indicates the value for the following condition.Input: wave generator, fixed: circular spline S, output: circular spline D

How to use

Usage example

■Phase adjustment

Fig. 305-1

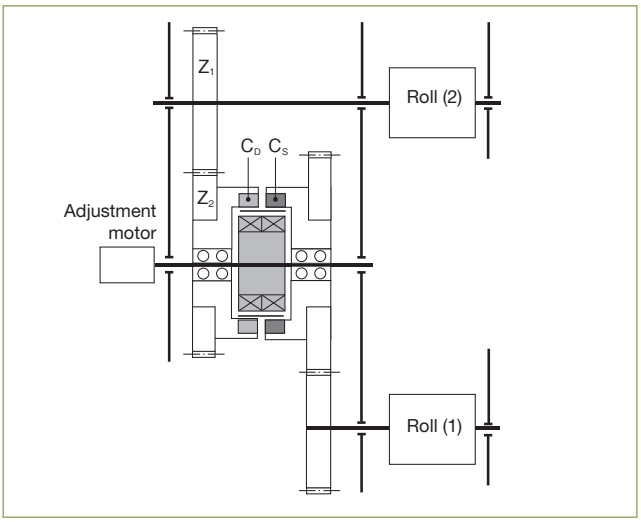

Brake a unit to adjust the phase of two rolls, normally an adjusting motor, and rotate it in the system: roll (1) → C_S → C_D → Roll (2). When the phase of Roll (2) against Roll (1) needs to be adjusted, the adjusting motor should be rotated. Stop the motor after adjustment and return Roll (2) to the original rotation.

(Calculation formula)
When the adjusting motor is fixed, the rotational speed of Roll (2) should be N_O. Assuming that the adjusting motor rotates in N_W, rotational speed N of the roll is expressed as follows.

Formula 305-1

$$N = N_O \pm \frac{1}{R}\left(\frac{Z_2}{Z_1}\right) N_W$$

(The sign is minus (–) when the wave generator rotates in the same direction as the circular spline. It is plus (+) when the wave generator rotates in the opposite direction.)

■Fine adjustment

Fig. 305-2

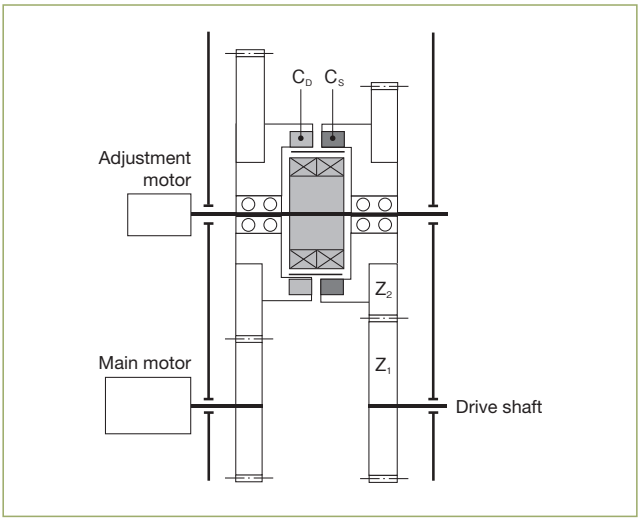

This is the method to fine-tune the speed and timing of the drive shaft by the adjusting motor without changing the rotational speed of the main motor.

(Calculation formula)
When the adjusting motor is fixed, the rotational speed of the drive shaft is expressed as follows.

Formula 305-2

$$N = N_O \pm \frac{1}{R+1}\left(\frac{Z_2}{Z_1}\right) N_W$$

(The sign is plus (+) when the wave generator rotates in the same direction as the circular spline. It is minus (–) when the wave generator rotates in the opposite direction.)

■Continuous operation adjustment

Fig. 305-3

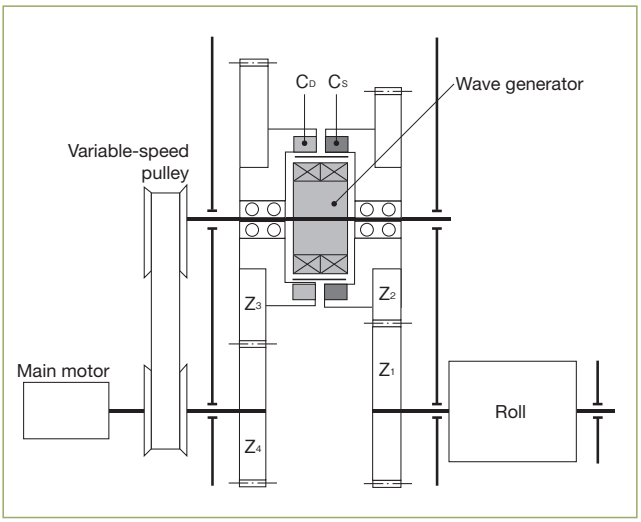

This is a unit to continuously make a slight change to the rotational speed of the roll. The rotation of the main motor has the following two routes.
(1) Z_4 → $Z_3(C_D)$ → $Z_2(C_S)$ → Z_1 → Roll
(2) Variable-speed pulley → wave generator → C_S (Z_2) → Z_1 → Roll
The speed change of the roll is given by (2).

(Calculation formula)
Assuming that the rotation of the variable-speed pulley is zero, the rotational speed of the roll rotated by the main motor is N_O. When the rotation of the wave generator, namely the variable-speed pulley, changes from N_1 to N_2, rotational speed N of the roll is expressed as follows.

Formula 305-3

$$N = N_O \pm \frac{1}{R+1}\left(\frac{Z_2}{Z_1}\right)(N_1 \text{ to } N_2)$$

(The sign is plus (+) when the wave generator rotates in the same direction as the circular spline. It is minus (–) when the wave generator rotates in the opposite direction.)

Example of assembly

■Paper-cutting machine

The right-hand figure shows an example of a general application that is used for the mechanism shown below.

Outline of operation

Rollers (1), (2) and (3) are interlocked based on the rotation of the cutter. Roller (2) feeds paper for further printing on the printed paper that is then extracted by Roller (1). Roller (2) adjusts the misaligned printing.
Roller (1) adjusts the printed paper so that it will be cut in the correct position by Roller (2). Roller (3) makes further adjustment following Roller (1).

You can change the phase between the rollers by building a Harmonic differential gear in Units (1), (2) and (3) without stopping the unit.

Fig. 306-1

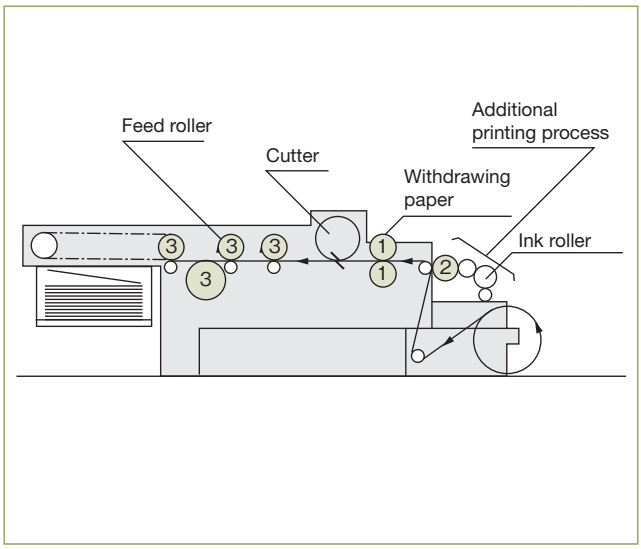

■Printer (film material)

The following process is essential for printing on elastic material.

1. A device to adjust printing misalignment by expansion and contraction
2. A device to continue tensioning film to prevent wrinkling

Outline of operation

The film material is withdrawn by ①a.
①b tensions film between ①a and ①b to prevent wrinkling.
② tensions film betwenn ①b and ② to prevent slackening in the printing process ⑤. In the printing process ⑤, all rollers from ⑤1 to ⑤6 are used for 6-color printing. Adjustment is made to ⑤2 based on ⑤1, to ⑤3 based on ⑤2 and so on up to ⑤4 ⑤5 ⑤6 by the Harmonic differential gear.

The harmonic differential gear is built in for all rollers from ①a to ⑤6.

Fig. 306-2

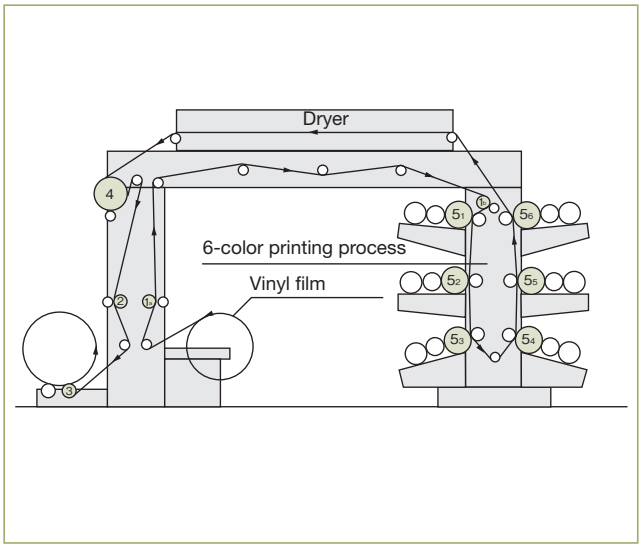

Difference between the differential gear and the Harmonic differential gear

Table 307-1

Differential gear	Harmonic differential gear
As many gears are required in the differential device, the device increases in size, causing problems in design, and is difficult build it in.	As the Harmonic differential gear includes the differential mechanism, it can be designed to be of compact size and is easily built in.
A unit using a plant gear causes a lot of backlash and is disadvantageous in position and timing precision.	As it causes very small backlash, it is advantageous in position and timing precision.
It is not easy to fine tune compared to the Harmonic differential gear.	As it has a large reduction ratio, it can produce very fine tuning.
Noisy gear sound	Very quiet.

That shown in the right-hand figure is a differential gear used in a printer maker. It is an example of very smart, compact design using the Harmonic differential gear.

Conventional differential gear

Fig. 307-1

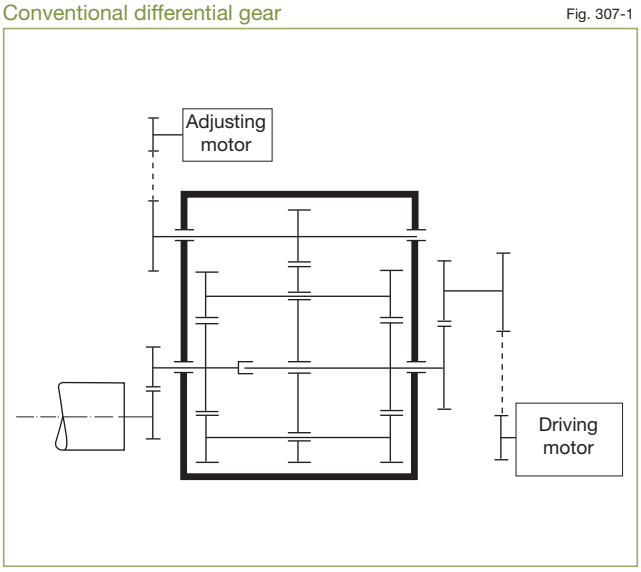

Using the Harmonic differential gear

Fig. 307-2

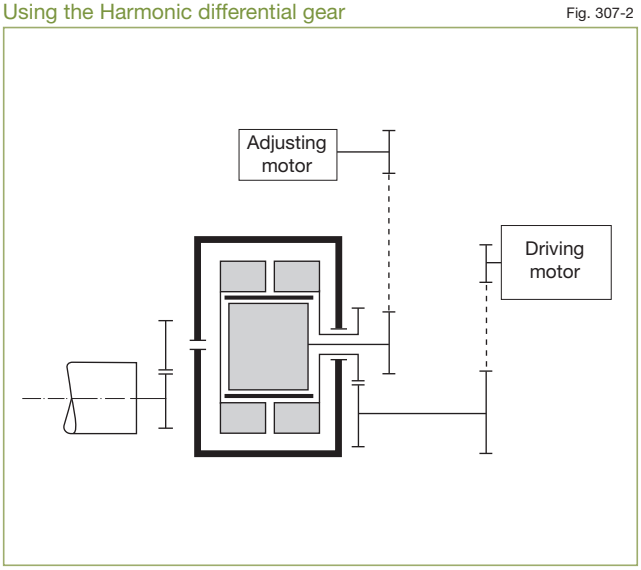

Example of design

■Multicolor printer Phase adjuster

Fig. 308-1

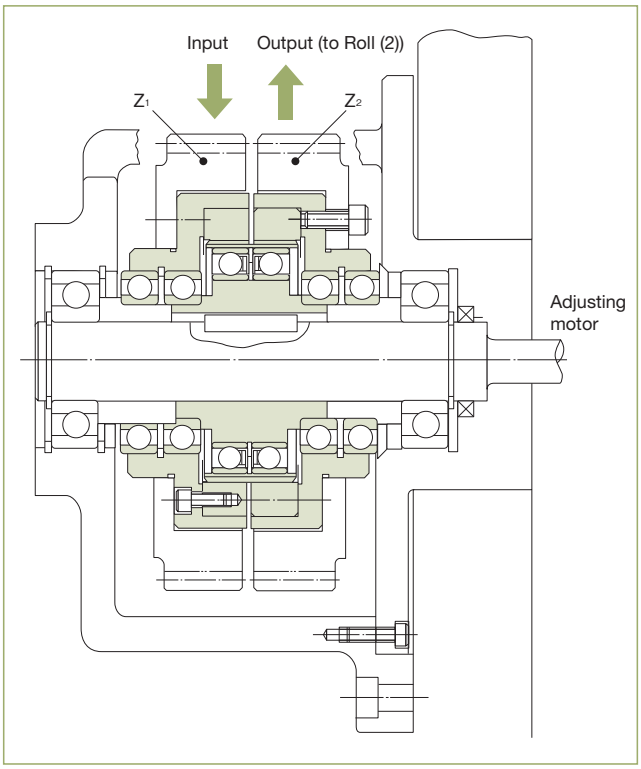

The figure is an example of a Harmonic differential gear unit (FD-0) built in as a phase adjuster for the roll of a multicolor printer. The adjusting motor is fixed during normal operation, and the rotation at Z_1 is transmitted to Z_2 almost at a ratio of 1:1. To adjust the phase of only Roll (2), rotate the adjusting motor to generate a small rotational difference. After adjustment, stop the motor to bring Roll (2) back to the original rotational speed.

Gear selection data

The selection data of the number of teeth, Z_1, Z_2, Z_3 and Z_4, of the gear is shown when rotational speed N_1 is equal to N_2, namely $i=\frac{N_2}{N_1}=1$.

$$\frac{N_2}{N_1}=i=\frac{Z_1}{Z_2}\cdot\frac{Z_D}{Z_S}\cdot\frac{Z_3}{Z_4}\cdots\cdots(i)$$

Where,
Zs: the number of teeth of circular spline S
ZD: the number of teeth of circular spline D

Here $i_D=\frac{Z_D}{Z_S}\left(\text{or } \frac{R}{R+1}\right)$ makes

$$i=\frac{Z_1}{Z_2}\cdot\frac{Z_3}{Z_4}\cdot i_D$$

Table 308-1

i_D	$\frac{Z_1}{Z_2}\cdot\frac{Z_3}{Z_4}$					
$\frac{80}{81}$	$\frac{18}{16}\cdot\frac{18}{20}$	$\frac{18}{16}\cdot\frac{27}{30}$	$\frac{15}{16}\cdot\frac{27}{25}$	$\frac{18}{20}\cdot\frac{27}{24}$	$\frac{21}{20}\cdot\frac{27}{28}$	$\frac{27}{26}\cdot\frac{39}{40}$
$\frac{120}{121}$	$\frac{22}{20}\cdot\frac{22}{24}$					
$\frac{128}{129}$	$\frac{15}{16}\cdot\frac{43}{40}$	$\frac{33}{32}\cdot\frac{43}{40}$	$\frac{43}{42}\cdot\frac{63}{64}$			
$\frac{160}{161}$	$\frac{14}{16}\cdot\frac{23}{20}$	$\frac{21}{20}\cdot\frac{23}{24}$	$\frac{23}{22}\cdot\frac{77}{80}$	$\frac{23}{25}\cdot\frac{35}{32}$		

(Note) 1. The number of teeth given above is applicable when Z_D and Z_S are arranged as shown in the figure.
2. The difference in the number of teeth is adjusted to $Z_1 - Z_2 \leqq 3$ and $Z_3 - Z_4 \leqq 3$.
3. It is useful to break down i_D to prime numbers to use a different number of teeth.
It is not possible to break down i_D to prime numbers for R=79, 96, 100, 131, 208 and 258.

Fig. 308-2

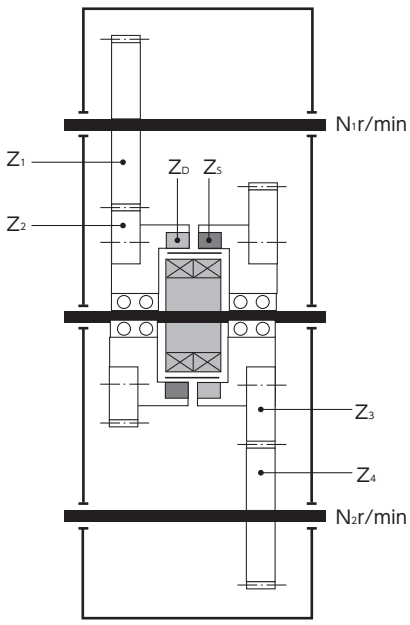

Example of calculation

This is to calculate the torque required for the number of teeth of the gear, rotational speed, adjustment quantity and adjustment based on the example shown in the right-hand figure (Fig. 309-1).

Fig. 309-1

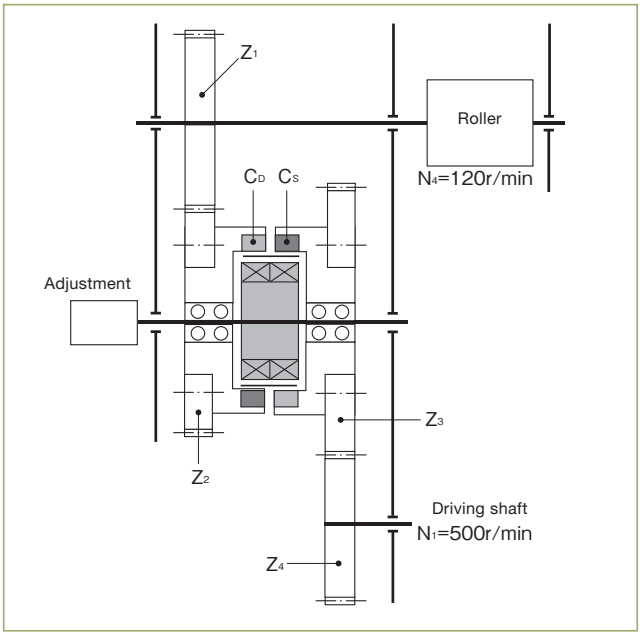

[Usage condition]

In Figure 309-1

Speed around the roller	V=60m/min
Length around the roller	L_W=500mm
Roller torque	T_W=7kg-m
Rotational speed of the drive shaft	N_1=500r/min
Rotational speed of the roller	$N_4=\frac{V}{L_W}=\frac{60}{0.5}$=120r/min

Under these conditions, select model number 25 of differential gear unit (FD-0) with reduction ratio R=80, review whether or not this mode number is appropriate, as well as the number of teeth and adjustment torque.

■The number of teeth of each gear (selection of Z_1, Z_2, Z_3 and Z_4)

All ratios for the number of teeth of each gear are as follows.

From i $\quad i=\frac{N_4}{N_1}=\frac{Z_2}{Z_1}\cdot\frac{C_S}{C_D}\cdot\frac{Z_4}{Z_3}$

$\frac{Z_2\cdot Z_4}{Z_1\cdot Z_3}=\frac{N_4\cdot C_D}{N_1\cdot C_S}$ is obtained.

Here, $\frac{N_4}{N_1}=\frac{120}{500}=\frac{2^3\times3\times3}{2^2\times5^3}$

$\frac{C_D}{C_S}=\frac{80}{81}=\frac{2^4\times5}{3^4}$

$$\frac{Z_2}{Z_1}\times\frac{Z_4}{Z_3}=\frac{2^3\times3\times3}{2^2\times5^3}\times\frac{2^4\times5}{3^4}=\frac{2^5}{3^3\times5}=\frac{2^3}{3\times5}\times\frac{2^2}{3^2}=\frac{8}{15}\times\frac{4}{9}=\frac{16}{30}\times\frac{16}{36}$$

Hence,
Z_1=30, Z_2=16, Z_3=36, Z_4=16

■Calculation of rotational speed

The rotational speed of each gear is shown below.

Z_4: N_1=500r/min

Z_3: $N_3=\frac{Z_4}{Z_3}\cdot N_1=\frac{16}{36}\times500$=222.2r/min

Z_2: $N_2=\frac{C_S}{C_D}\cdot N_3=\frac{80}{81}\times222.2$=225r/min

Z_1: N_4=120r/min

■Adjustment quantity

The misalignment (adjustment quantity),$\triangle\theta$, at the roller is expressed as follows when the adjusting wave generator rotates once (360°).

$\triangle\theta=\frac{Z_2}{Z_1}\cdot\frac{1}{R}\cdot\theta=\frac{16}{30}\times\frac{1}{80}\times360°$=2.4°

Therefore, the adjustment quantity is expressed as follows in the circle.

$\triangle\theta=\frac{2.4°}{360°}\times500$mm=3.3mm

■Adjustment torque required

The torque required for adjustment is expressed as follows.

$T=T_W\cdot\frac{Z_2}{Z_1}\cdot\frac{1}{R}\cdot\frac{1}{\eta}=7\text{kg-m}\times\frac{16}{30}\times\frac{1}{80}\times\frac{1}{0.6}$

=0.07kg-m

(η: efficiency)

Technical data

Rating table

The rated torque at each rotational speed is shown below.

Table 310-1

Rotational speed r/min		3500		2850		1750		1450		1150		960		870		750		600		500	
Model	Reduc. ratio	N·m	kgf·m	N·m	kgf·m	N·m	kgf·m	N·m	kgf·m	N·m	kgf·m	N·m	kgf·m	N·m	kgf·m	N·m	kgf·m	N·m	kgf·m	N·m	kgf·m
20	80	29	3.0	30	3.1	30	3.1	30	3.1	30	3.1	30	3.1	30	3.1	30	3.1	30	3.1	30	3.1
	100	30	3.1	31	3.2	36	3.7	36	3.7	36	3.7	36	3.7	36	3.7	36	3.7	36	3.7	36	3.7
	128	31	3.2	34	3.5	42	4.3	43	4.4	43	4.4	43	4.4	43	4.4	43	4.4	43	4.4	43	4.4
	160	32	3.3	35	3.6	42	4.3	45	4.6	48	4.9	49	5.0	49	5.0	49	5.0	49	5.0	49	5.0
25	80	46	4.7	50	5.1	57	5.8	57	5.8	57	5.8	57	5.8	57	5.8	57	5.8	57	5.8	57	5.8
	100	49	5.0	53	5.4	67	6.8	67	6.8	79	8.1	79	8.1	79	8.1	79	8.1	79	8.1	79	8.1
	120	52	5.3	55	5.6	70	7.1	70	7.1	80	8.2	82	8.4	89	9.1	91	9.3	96	9.8	96	9.8
	160	54	5.5	57	5.8	71	7.2	73	7.4	80	8.2	83	8.5	89	9.1	92	9.4	98	10	108	11
	200	55	5.6	59	6.0	71	7.2	74	7.5	80	8.2	84	8.6	89	9.1	92	9.4	98	10	108	11
32	78	98	10	108	11	108	11	108	11	108	11	108	11	108	11	108	11	108	11	108	11
	100	108	11	118	12	137	14	147	15	157	16	157	16	157	16	157	16	157	16	157	16
	131	108	11	118	12	137	14	157	16	167	17	176	18	176	18	196	20	206	21	206	21
	157	108	11	118	12	137	14	157	16	167	17	176	18	176	18	196	20	206	21	216	22
	200	108	11	118	12	137	14	157	16	167	17	176	18	176	18	196	20	206	21	216	22
	260	108	11	118	12	137	14	157	16	167	17	176	18	176	18	196	20	206	21	216	22
40	80	196	20	196	20	196	20	196	20	196	20	196	20	196	20	196	20	196	20	196	20
	100	235	24	245	25	265	27	265	27	265	27	265	27	265	27	265	27	265	27	265	27
	128	235	24	245	25	294	30	314	32	343	35	363	37	372	38	372	38	372	38	372	38
	160	235	24	245	25	294	30	314	32	343	35	363	37	372	38	392	40	421	43	451	46
	200	235	24	245	25	294	30	314	32	343	35	363	37	372	38	392	40	421	43	451	46
	258	235	24	245	25	294	30	314	32	343	35	363	37	372	38	392	40	421	43	451	46
50	80	353	36	353	36	353	36	353	36	353	36	353	36	353	36	353	36	353	36	353	36
	100	441	45	470	48	549	56	559	57	559	57	559	57	559	57	559	57	559	57	559	57
	120	441	45	470	48	549	56	588	60	637	65	666	68	666	68	666	68	666	68	666	68
	160	441	45	470	48	549	56	588	60	637	65	676	69	696	71	745	76	794	81	843	86
	200	441	45	470	48	549	56	588	60	637	65	676	69	696	71	745	76	794	81	843	86
	242	441	45	470	48	549	56	588	60	637	65	676	69	696	71	745	76	794	81	843	86
65	78	—	—	—	—	764	78	764	78	764	78	764	78	764	78	764	78	764	78	764	78
	104	—	—	—	—	1030	105	1100	112	1180	120	1190	121	1190	121	1190	121	1190	121	1190	121
	132	—	—	—	—	1030	105	1100	112	1180	120	1250	128	1290	132	1380	141	1460	149	1570	160
	158	—	—	—	—	1030	105	1100	112	1180	120	1250	128	1290	132	1380	141	1460	149	1570	160
	208	—	—	—	—	1030	105	1100	112	1180	120	1250	128	1290	132	1380	141	1460	149	1570	160
	260	—	—	—	—	1030	105	1100	112	1180	120	1250	128	1290	132	1380	141	1460	149	1570	160
80	80	—	—	—	—	1370	140	1370	140	1370	140	1370	140	1370	140	1370	140	1370	140	1370	140
	96	—	—	—	—	1800	184	1800	184	1800	184	1800	184	1800	184	1800	184	1800	184	1800	184
	128	—	—	—	—	2040	208	2180	222	2340	239	2490	254	2570	262	2710	277	2710	277	2710	277
	160	—	—	—	—	2040	208	2180	222	2340	239	2490	254	2570	262	2740	280	2950	301	3130	319
	194	—	—	—	—	2040	208	2180	222	2340	239	2490	254	2570	262	2740	280	2950	301	3130	319
	258	—	—	—	—	2040	208	2180	222	2340	239	2490	254	2570	262	2740	280	2950	301	3130	319
	320	—	—	—	—	2040	208	2180	222	2340	239	2490	254	2570	262	2740	280	2950	301	3130	319
100	80	—	—	—	—	2470	252	2470	252	2470	252	2470	252	2470	252	2470	252	2470	252	2470	252
	100	—	—	—	—	3720	380	3720	380	3720	380	3720	380	3720	380	3720	380	3720	380	3720	380
	120	—	—	—	—	3720	382	3980	406	4280	437	4560	465	4710	481	4740	484	4740	484	4740	484
	160	—	—	—	—	3720	382	3980	406	4280	437	4560	465	4710	481	5010	511	5390	550	5720	584
	200	—	—	—	—	3720	382	3980	406	4280	437	4560	465	4710	481	5010	511	5390	550	5720	584
	242	—	—	—	—	3720	382	3980	406	4280	437	4560	465	4710	481	5010	511	5390	550	5720	584
	320	—	—	—	—	3720	382	3980	406	4280	437	4560	465	4710	481	5010	511	5390	550	5720	584

(Note) 1. Rotational speed: This indicates the rotational speed of the wave generator if used as a reducer.
This indicates the relative rotational speed of the wave generator and the circular spline if used as a differential unit.
2. The torque against a rotational speed of 2,500 r/min or less is equal to the torque for 500 r/min.
3. The permissible momentary torque allows up to 200% of the torque at a rotational speed of 1,450 r/min.

Outline drawing of unit type (FD-0)

Fig. 311-1

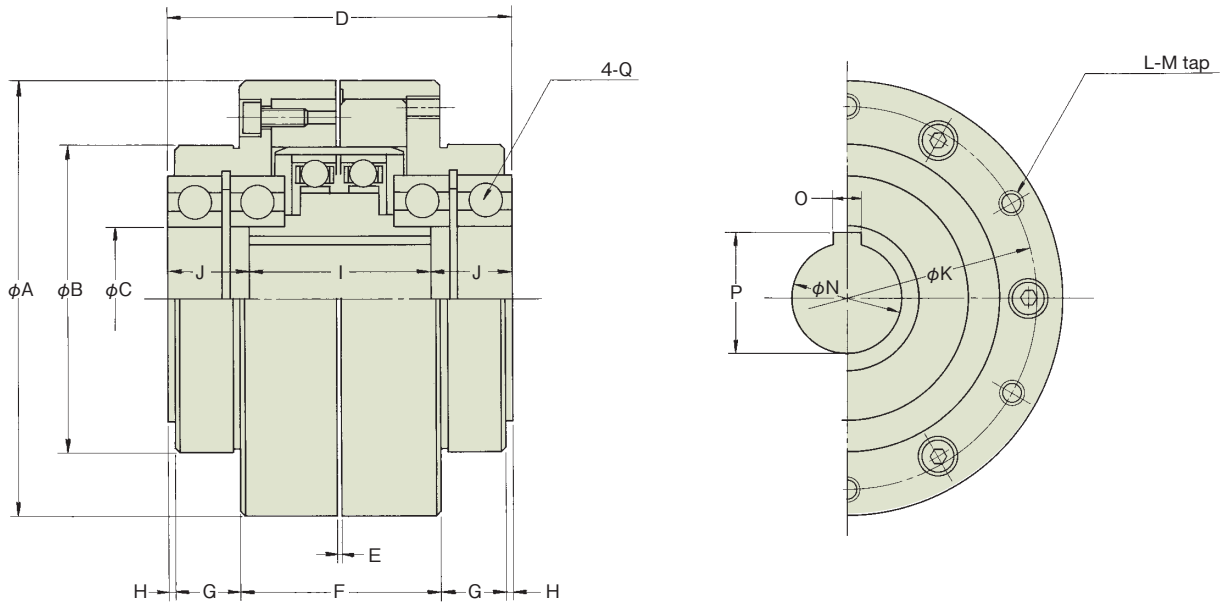

Measurement table of unit type (FD-0)

Table 311-1
Unit: mm

Symbol \ Model	20	25	32	40	50	65	80	100
ϕA	85	95	120	145	185	235	290	360
ϕB_{h7}	52	65	85	100	125	140	180	210
ϕC	20	30	40	50	60	70	90	110
D	73	81	95	113	132	147	178	212
E	1	1	1	1	1	1	1	1
F	44	45	55	65	80	117	129	155
G	12.5	16	18	20	22	12	21.5	25.5
H	2	2	2	4	4	3	3	3
I	38	40	50	68	78	87	106	130
J	17.5	20.5	22.5	22.5	27	30	36	41
ϕK	70	80	105	125	155	195	240	290
L	6	6	6	6	6	6	8	8
M	M4×7	M5×8	M6×9	M8×11	M10×13.5	M12×23	M12×23	M14×27
ϕN_{H7}	12	20	30	35	40	50	65	80
O_{Js9}	4	6	8	10	12	14	18	22
P	13.8	22.8	33.3	38.3	43.3	53.8	69.4	85.4
Q	#6004	#6006	#6008	#6010	#6012	#6014	#6018	#6022
Mass (kg)	2.0	2.6	5.0	8.3	17	34	59	118

Outline drawing of component type (FD-2)

Fig. 312-1

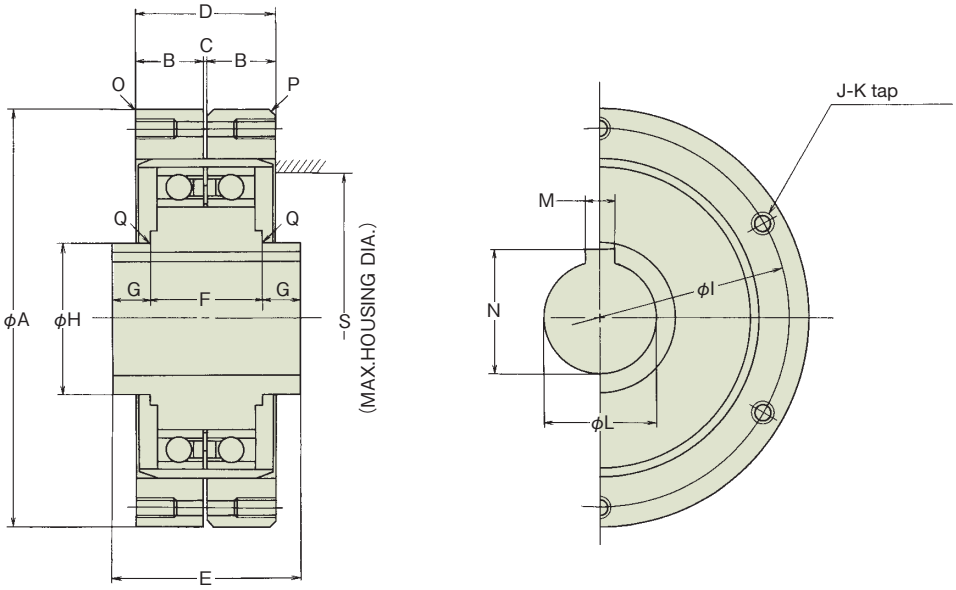

Measurement table of component type (FD-2)

Table 312-1
Unit: mm

Symbol \ Model	20	25	32	40	50	65	80	100
ϕA_{g7}	70	85	110	135	170	215	265	330
B	12	14	18	21	26	35	41	50
C	1	1	1	1	1	1	1	1
D	25	29	37	43	53	71	83	101
E	38	40	50	68	78	87	106	130
F	21.5	25	30	44	54	59	74	92
G	8.25	7.5	10	12	12	14	16	19
ϕH_{J6}	20	30	40	50	60	70	90	110
ϕI	60	75	100	120	150	195	240	290
J	6	6	6	6	6	6	8	8
K	M3×6	M4×8	M5×10	M6×12	M8×16	M10×20	M10×20	M12×24
ϕL_{H7}	12	20	30	35	40	50	65	80
M_{Js9}	4	6	8	10	12	14	18	22
N	13.8	22.8	33.3	38.3	43.3	53.8	69	85.4
O_C	0.2	0.2	0.2	0.4	0.4	0.4	0.4	0.4
P_C	1	1.5	1.5	1.5	1.5	1.5	2	2
Q_R	0.5	1	1	1	2	1	1.5	2
S	42	53	69	84	105	138	169	211
Mass (kg)	0.6	1.0	2.0	3.6	7.2	14	26	48

Efficiency characteristics

The efficiency of the differential unit type (FD-0) varies depending on the power transmission route.

1. The efficiency when the power enters from circular spline S (or D) to transmit the rotation to circular spline D (or S)

   For oil lubrication: About 90%
   For grease lubrication: About 80%

2. The efficiency for obtaining the input torque required by the wave generator for phase adjustment and to use it as a reducer is shown in Graph 313-1.

Table 313-1

Load torque	Rated torque in rating table
Lubrication condition	Oil lubrication (approx. 40°C)

(Note) The efficiency decreases by about 10% for grease lubrication.

Efficiency

Graph 313-1

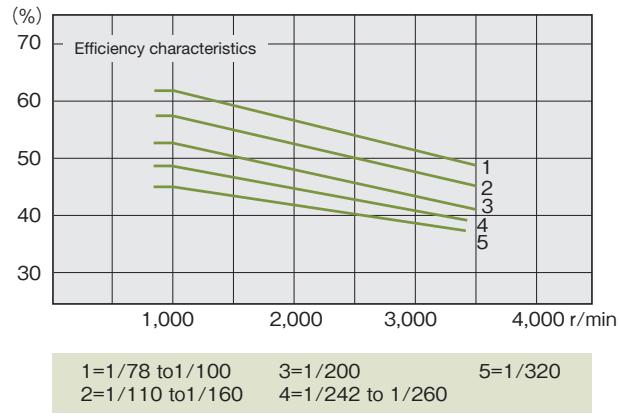

Inertia moment

The value of GD^2 of each part is shown in Table 313-2.

Table 313-2
Unit: ($X10^{-4}kg{\cdot}m^2$)

	Model	20	25	32	40	50	65	80	100
I	Wave generator (except the outer race of the wave generator)	1.44	3.63	12.9	37.0	112	366	1020	3050
II	Circular spline S, D Outer ring of the wave generator	13.7	33.8	125	326	1020	3440	9270	27000
III	I + II	15.2	37.5	138	363	1140	3810	10300	30100
IV	Support bearing (4)	2.91	8.98	23.4	451	104	205	646	1590
V	Casing (right and left casing total)	52.6	69.0	204	484	1660	6220	15700	43200

Max. permissible rotational speed

The maximum permissible rotational speed means:

1. The rotational speed of the wave generator when used as a reducer
2. The relative rotational speed of the wave generator and the circular spline when used as a differential unit

(1) For oil lubrication

Table 313-3
Unit: r/min

Model	20	25	32	40	50	65	80	100
Max. permiss. rotational speed	6000	5000	4500	4000	3500	3000	2500	2000

(2) For grease lubrication

Table 313-4
Unit: r/min

Model	20	25	32	40	50	65	80	100
Max. permiss. rotational speed	3600	3600	3600	3300	3000	2200	2000	1700

Lost motion and spring constant

See Page 120 for a definition of lost motion and the spring constant. Lost motion and the spring constant of the differential type is the value when either the wave generator or the circular spline is fixed and a torque is applied to another circular spline.

Table 314-1

Model	Lost motion		Spring constant	
	± load (kg·m)	Lost motion (arc-min)	Load (kg·m)	Spring constant (kgf·m/arc-min)
20	0.12	40	3.69	0.9
25	0.23	37	7.20	2.1
32	0.46	35	15.78	4.4
40	0.92	33	29.50	7.8
50	1.73	29	57.60	16
65	3.9	27	126.7	27
80	7.4	26	236.2	52
100	14.4	24	460.8	100

Design guide

Precautions on handling

The casing and the roller bearing in using a component type (FD-2) as a differential unit should be pursuant to the unit type (FD-0).

Precautions on assembly

HarmonicDrive® may generate vibration and abnormal sound due to problems during assembly. Perform assembly based on the FB series precautions (Page 109, Fig. 109-2).

Lubrication

There are two types of lubrication; oil lubrication and grease lubrication. Although oil lubrication is common, grease lubrication is applicable to intermittent operation.

■Oil lubrication

1. Type of lubricant

See Page 018 for lubrication details.

2. Oil quantity

The oil level shall be the position shown in Table 315-1.

Oil position

Table315 -1

Model	20	25	32	40	50	65	80	100
A	12	15	31	38	44	62	75	94

Fig. 315-1

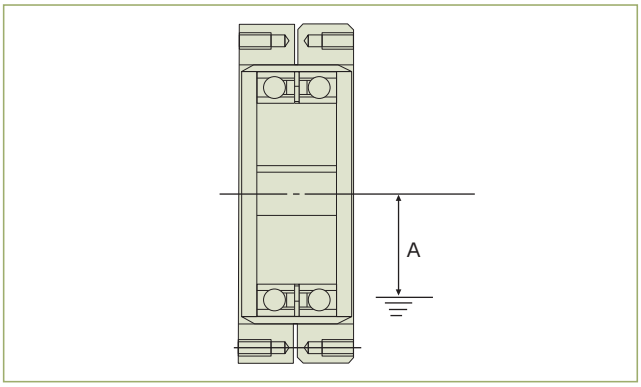

■Grease lubrication

Different from oil lubrication, as a cooling effect is not expected from grease lubrication, it is only available for short operation.

- Operating condition: ED%.. 10% or less, continuous operation for 10 minutes or less, the maximum permissible input rotational speed in Table 313-4 or less
- Recommended grease: .....Harmonic grease® SK-1A

(Note) If you use the product over ED% or the maximum permissible rotational speed, the grease will deteriorate, will not work as a lubricating mechanism and will result in damaging the reducer earlier. Extreme care should be taken.
Please consider the unit type since unit type (FD-0) also comes in grease sealed type (NIPPON KOYU LTD. MP No. 2).

MEMO

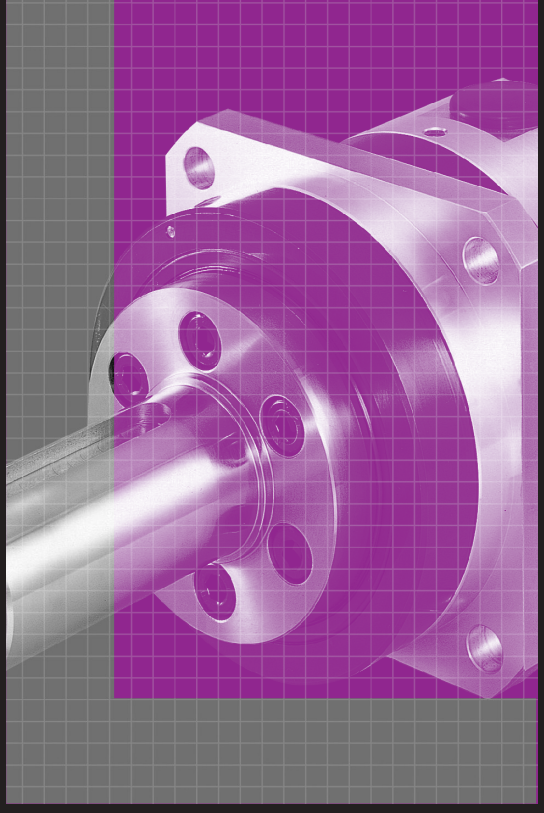

CSG-GH/CSF-GH Series

Gear Head Type CSG-GH/CSF-GH

For details, please see the catalog for “High-performance Gear Heads for Servo Motors” series.

Features and structure

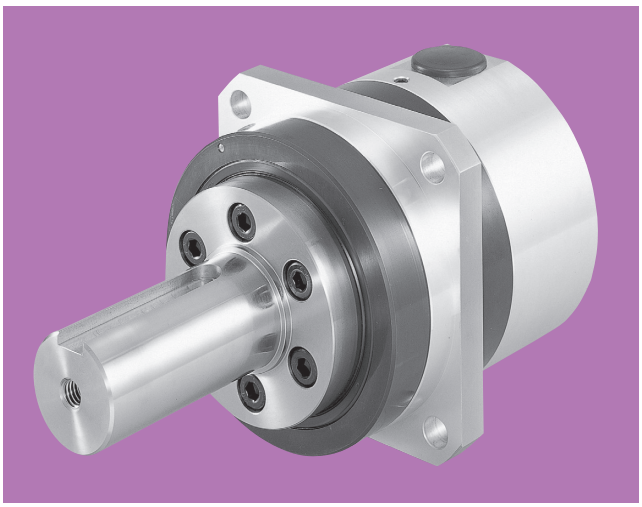

For details, please see the catalog for "High-performance Gear Heads for Servo Motors" series.

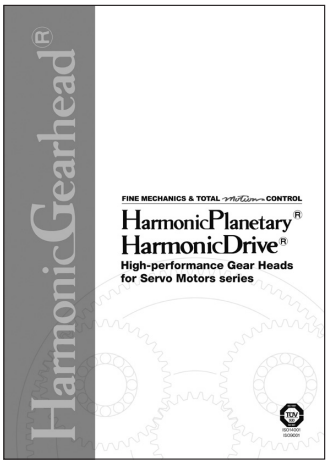

Structure of the CSG-GH/CSF-GH series unit type

Fig. 318-1

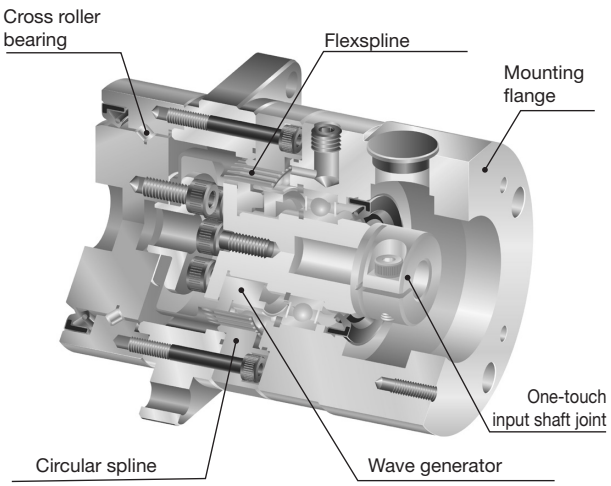

■CSG-GH/CSF-GH series

This is a gear head specially designed for the servo motor by maximizing the excellent performance of HarmonicDrive®. Even if you are not familiar with handling HarmonicDrive®, you can easily handle it to achieve high-precision positioning.

Features of the CSG-GH/CSF-GH series

■Can be selected from high torque or standard type of two types
High torque type CSG series and standard type CSF series are available. Compare to CSF series, CSG series has 30% more torque, thus extended the lifespan.

■Simple installation on the servo motors of various manufacturers
The mounting flange for the servo motors of various manufacturers and the one-touch input shaft joint have been adopted as standard for easy motor installation. We have prepared a matching table with domestic servo motors provided by Yasukawa Electric, Mitsubishi Electric and Panasonic and so on. You can place an order using codes only.

■Wide variations
We have prepared five model numbers, five reduction ratios and two types as output specification; shaft type and flange type.

Model number:	14, 20, 32, 45 and 65
Reduction ratio:	50, 80, 100, 120, 160
Output specifications:	flange, shaft, shaft (with key and tap)
Motor capacity:	Available from small-capacity to medium-capacity servos of 30 W to 5000 W

■Non-backlash
The unique operating principle of HarmonicDrive® causes no backlash due to teeth engagement.

■High moment capacity
A highly rigid cross roller bearing has been adopted for the main roller bearing to improve wobbling precision on the output side with high moment capacity.

■Cross roller bearing
This is a highly rigid cross roller bearing. As it is adopted as the output roller bearing, it can directly support the load and improves mechanical precision including wobbling.

■One-touch input shaft joint
Insert the output shaft of the servo motor, and tighten the bolts to complete assembly. We have prepared input shaft joints to meet the servo motors of major manufacturers.

■Mounting flange
You do not need to make a separate arrangement as we have prepared a standard flange that meets the servo motors of major manufacturers.

MEMO

Warranty period and terms

Products that are described in this catalog are warranted as follows:

■Warranty period

Under the condition that the products are handled, used and maintained properly followed each item of the technical materials, the manuals, and this catalog, all the products are warranted against defects in workmanship and materials for the shorter period of either one year after delivery or 2,000 hours of operation time.

■Warranty terms

All the products are warranted against defects in workmanship and materials for the warranted period.
This limited warranty does not apply to any product that has been subject to:

(1) User's misapplication, improper installation, inadequate maintenance, or misuse.
(2) Disassembling, modification or repair by others than Harmonic Drive Systems, Inc.
(3) Imperfection caused by the other than the products.
(4) Natural disasters or others that do not belong to the responsibility of Harmonic Drive Systems, Inc.

Our liability shall be limited exclusively to repairing or replacing the product only found by Harmonic Drive Systems, Inc. to be defective. Harmonic Drive Systems, Inc. shall not be liable for consequential damages of other equipment caused by the defective products, and shall not be liable for the incidental and consequential expenses and the labor costs for detaching and installing to the driven equipment

Trademark

"HarmonicDrive®" is registered trademark of Harmonic Drive Systems Inc. products. The academic or general nomenclature is "wave motion gearing".

HarmonicDrive® Reducer for precision control

For Safe Use of HarmonicDrive® component and unit

Warning : Means that improper use or handling could result in a risk of death or serious injury.

Caution : Means that improper use or handling could result in personal injury or damage to property.

Limited Applications

This product cannot be used for the following applications:

* Space equipment
* Aircraft equipment
* Nuclear power equipment
* Equipment and apparatus used in domestic homes
* Vacuum equipment
* Automotive equipment
* Game equipment
* Equipment that directly works on human bodies
* Equipment for transport of humans
* Equipment for use in a special environment

Please consult Harmonic Drive Systems beforehand when intending to use one of its product for the aforementioned applications. Install a safety device that avoids an accident even if output of this product becomes uncontrollable due to breakdown when using it in equipment that affects human lives and that may trigger serious damage.

Operational Precaution: Be certain to read the catalog before operating the equipment.

Caution	**Be careful in handling products and parts.** ● Do not give strong shock to parts and units with a hammer, etc. Do not scratch or bruise them. Possible damage is assumed. ● If you use the equipment in a damaged condition, the specified performance may not be retained. It can also cause troubles such as breakdown.	Caution	**Apply torque within the allowable range.** ● Do not apply torque exceeding the instantaneous allowable max. torque. Applying excess torque can cause troubles such as loose tightening bolts, generation of backlash and breakdown. ● Striking an arm directly attached to the output shaft can damage the arm and make the output shaft uncontrollable.
Caution	**Do not change a set of parts.** ● The product is manufactured with sets of parts. The specified performance may not be retained if you have used mixed sets of parts.	Caution	**Do not break down unit products.** ● Do not break down and reassemble unit products. Original performance may not be reproduced.
Caution	**Be sure to perform the anti-rust treatment.** ● For details of the surface processing, check the delivered specifications.	Caution	**Caution on Oil Leakage** ● The output shaft contains an oil seal of high reliability. However, it is not guaranteed to be completely free of oil leakage.Customers are kindly requested to protect against grease or oil leakage depending on their application.
Caution	**Install the equipment in a specified precision.** ● Design and assemble parts to keep the recommended installation precision on the catalog. ● Failure to keep the precision can cause troubles such as generation of vibration, reduction of life, deterioration of precision and breakdown. ● For the long-term storage products, it is recommended to check the performance or rust proofing	Caution	**Use only in a specified environment.** ● Please ensure the following environmental conditions are complied with: Ambient temperature 0 to 40°C No splashing of water or oil Do not expose to corrosive or explosive gas No dust such as metal powder
Caution	**Install the equipment in a specified manner.** ● Carry out assembly precisely in the specified order according to the catalog. ● Observe our recommended tightening methods (such as bolts used). ● Operating the equipment without precise assembly can cause troubles such as generation of vibration, reduction of life, deterioration of precision and breakdown.	Caution	**Use the specified lubricant.** ● Using other lubricant than our recommended products can reduce the life. Replace the lubricant in a specified condition. ● Grease is sealed in a unit product. Do not mix other kinds of grease.

Cautions when storing

Caution	● Store the product in a room at normal temperature and humidity without condensation. Anti-rust oil is applied before shipment, but it is not for preventing rust over an extended period of time. When storing the product for an extended period of time, periodically check for rust, etc., and implement anti-rust measures as required. Please contact us for information on anti-rust measures. ● Although black oxide finish is applied to some of our products, it dose not guarantee the antirust effect.

Handling lubricant

Warning	**Precautions on handling lubricant** ● Lubricant got in the eye can cause an inflammation. Wear protective glasses to prevent it from getting in your eye when you handle it. ● Lubricant coming in contact with the skin can cause an inflammation. Wear protective gloves to prevent it from contacting your skin when you handle it. ● Do not eat it (to avoid diarrhea and vomiting). ● When you open the container, you might have your hand cut by it. Wear protective gloves. ● Keep lubricant off children.	Caution	**Treatment of waste oil and containers** ● Treatment methods are obliged by law. Treat wastes appropriately according to the law. If you are unsure how to treat them, you should consult with the dealer before treating them. ● Do not apply pressure on an empty container. The container may blow up. ● Do not weld, heat, drill or cut the container. The remainder may ignite with an explosion.
Warning	**First-aid** ● If lubricant gets in your eye, you should wash your eye with clean water for 15 minutes and submit to medical treatment. ● If lubricant comes in contact with your skin, you should thoroughly wash it with water and soap. ● If you swallowed it, you should immediately submit to medical treatment without throwing it up by constraint.	Caution	**Storage** ● Tightly plug the container after use to prevent intrusion of dusts and water. Avoid direct sunlight to store lubricant in a dark place.

When Discarding Actuator and Servo Driver

Caution	**Please discard as industrial waste.** ● Please discard as industrial waste when discarding.

The main adoption markets


Metal Working Machine


Processing Machines


Measurement, Analytical and Test Systems


Medical Equipment


Telescopes

Source: National observatory of Inter-University Research Institute Corporation


Energy

Courtesy of Halliburton/Sperry Drilling Services


Crating and Packaging Machines


Communication Equipment


Space Equipment

Rover image created by Dan Maas, copyrighted to Cornell and provided courtesy NASA/ JPL-Caltech.


Glass and Ceramic Manufacturing Systems


Robots


Humanoid Robots

Source: Honda Motor Co., Ltd.


Printing, Bookbinding and Paper


Semiconductor Manufacturing Systems


Optical Machines


Wood, Light Metal and Plastic Machine Tools


Paper-making Machines

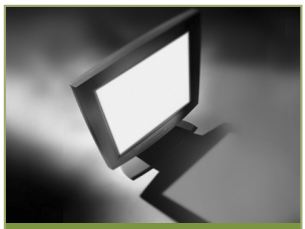
Flat Panel Display Manufacturing Systems

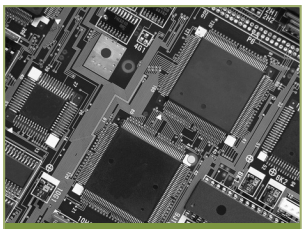
Printed Circuit Board Manufacturing Machines


Aircraft

As a Specialist in Precision Control Field

Through close cooperation in areas of development, design, production and marketing, Harmonic Drive Systems creates unique products tailored to customer needs.

In 1995 and 1998, Harmonic Drive Systems respectively obtained approvals for ISO 9001 (International Quality Management Standard) and for ISO 14001 (International Environmental Management Systems) from TÜV Product Service, a German accreditation organization. The approvals signify global recognition of the quality assurance and environment management systems of Harmonic Drive Systems.

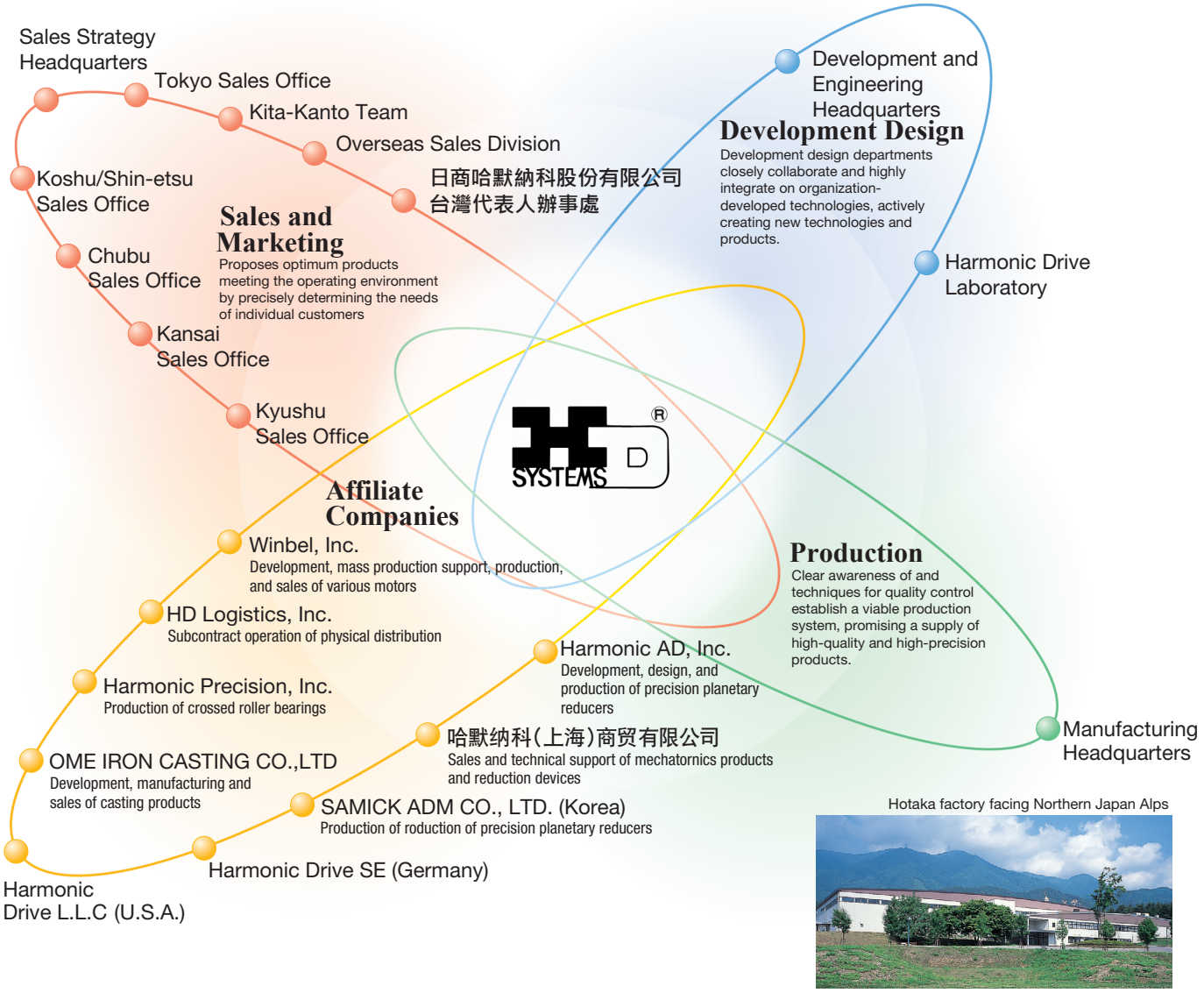

Hotaka factory facing Northern Japan Alps

OTHER PRODUCTS

HarmonicDrive®

Composed of only three basic components, the HarmonicDrive® speed reducer features more precision motion control through a unique mechanism.

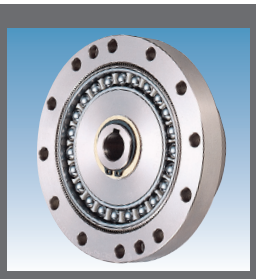

Harmonic Planetary®

Harmonic Planetary® is a planetary gear speed reducer featuring high precision and stiffness, created by utilizing expertise in precision machining technology of HarmonicDrive® in the field of low speed reduction ratio. A high rotational accuracy is achieved by a unique backlash removal mechanism.

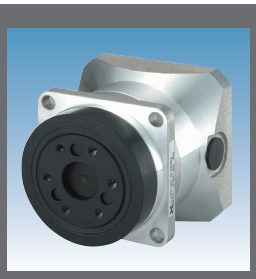

Harmonic Linear®

The linear actuators compactly combining a precision screw and HarmonicDrive®. Versatile series are available for ultra precision positioning and high driving force.

Beam Servo®

Beam servo is developed based on the small motors and optical sensor technology, which are developed by HarmonicDrive®. Smooth optical scanning is realized by high response and precision of optical scanner.

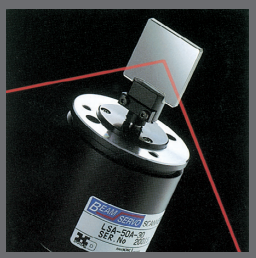

Harmonic Drive Systems Inc.

Information desk for urgent repair and inquiry [Information desk for urgent repair request and technical consultation]

• TEL: CS department 0263 (83) 6812

• Business hours: Monday ~ Friday 9:00~12:00 13:00~ 17:00 (Except Saturdays, Sundays, national holidays and our specified days off)

HarmonicDrive® ハーモニックドライブ®
HarmonicPlanetary® ハーモニックプラネタリ®
HarmonicGrease® ハーモニックグリース®
HarmonicGearhead® ハーモニックギヤヘッド®
HarmonicLinear® ハーモニックリニア®
BEAM SERVO® ビームサーボ®
Harmonicsyn® ハーモニックシン®

Registered Trademark in Japan

Certifications for ISO 14001 and ISO 9001 and obtained from TÜV Product Service GmbH

https://www.hds.co.jp/

Head Office:	Ichigo Omori Building, 6-25-3 Minami-Ohi, Shinagawa-ku, Tokyo, Japan 140-0013 TEL: +81-3-5471-7800 FAX: +81-3-5471-7811
Tokyo Office:	Ichigo Omori Building, 6-25-3 Minami-Ohi, Shinagawa-ku, Tokyo, Japan 140-0013 TEL: +81-3-5471-7830 FAX: +81-3-5471-7836
Tokyo Office Kita-Kanto Team:	Ichigo Omori Building, 6-25-3 Minami-Ohi, Shinagawa-ku, Tokyo, Japan 140-0013 TEL: +81-3-6410-8485 FAX: +81-3-6410-8486
Koshin Office:	5103-1 Hotakaariake Azumino-shi Nagano, Japan 399-8301 TEL: +81-263-81-5940 FAX: +81-263-50-5010
Chu-bu Office:	TM21-2F 21 Terugaoka, Meito-ku, Nagoya, Aichi, Japan 465-0042 TEL: +81-52-773-7451 FAX: +81-52-773-7462
Kansai Office:	Shin-Osaka Ueno To-yo Building 3F, 7-4-17 Nishi-nakajima, Yodogawa-ku, Osaka-shi, Osaka, Japan 532-0011 TEL: +81-6-6885-5720 FAX: +81-6-6885-5725
Kyushu Office:	NMF Hakata station-front Building 7F, 1-15-20 Hakata station-front, Hakata-ku, Fukuoka-shi, Fukuoka, Japan 812-0011 TEL: +81-92-451-7208 FAX: +81-92-481-2493
Overseas Sales Divison:	5103-1 Hotakaariake Azumino-shi Nagano, Japan 399-8301 TEL: +81-263-81-5950 FAX: +81-263-50-5010
Hotaka Plant:	1856-1 Hotakamaki Azumino-shi Nagano, Japan 399-8305 TEL: +81-263-83-6800 FAX: +81-263-83-6901
Harmonic Drive SE:	Hoenbergstrasse 14 D-65555 Limburg a.d. Lahn Germany TEL: +49-6431-5008-0 FAX: +49-6431-5008-119
Harmonic Drive L.L.C:	42 Dunham Ridge, Beverly, Massachusetts 01915 U.S.A. TEL: +1-978-532-1800 FAX: +1-978-532-9406

This catalog contains information as of July 2021.
No.2107-21R-HD-E